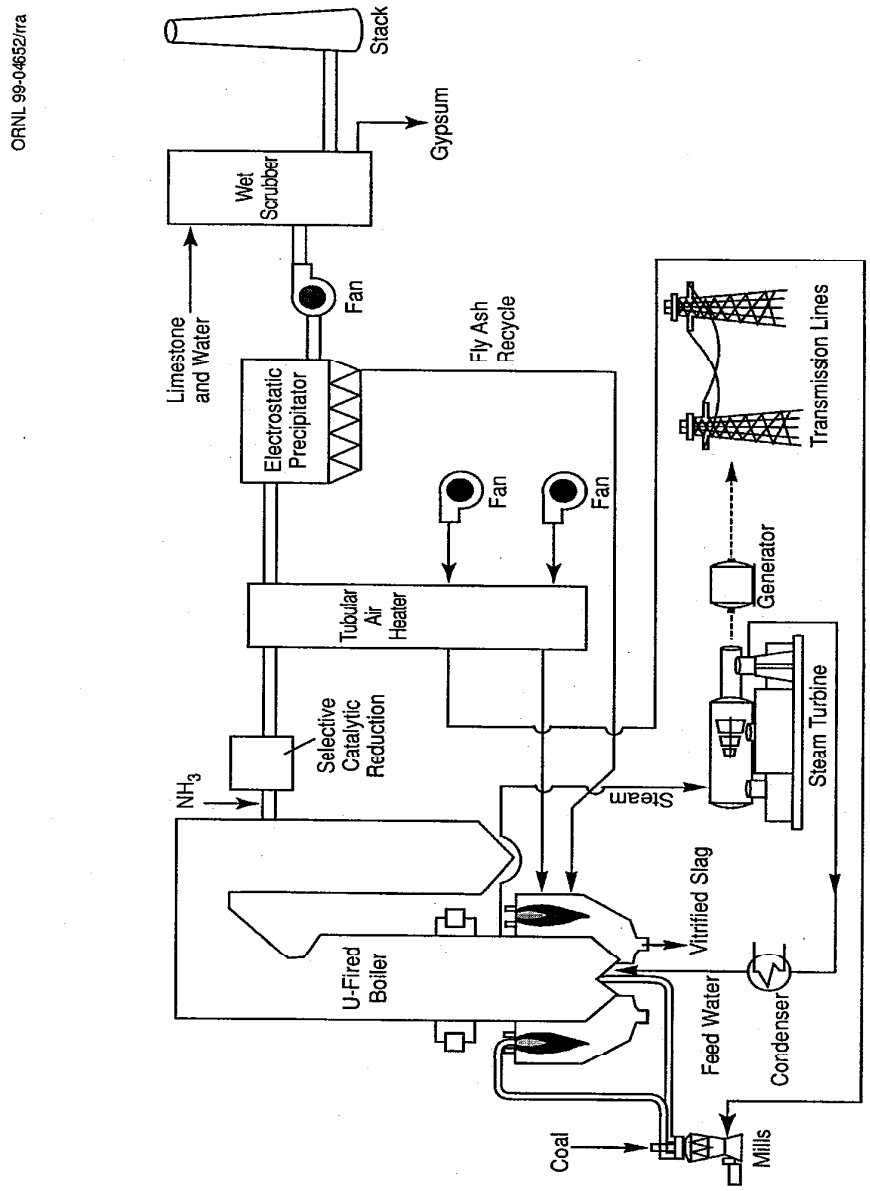

Figure 2.1.3. Flow diagram illustrating key components of the LEBS technology