# 2. THE PROPOSED ACTION AND ALTERNATIVES

This section discusses the proposed action, the no-action alternative, and alternatives dismissed from further consideration.

## 2.1 PROPOSED ACTION

The proposed action is for DOE to provide cost-shared funding for the design, construction, and demonstration of the proposed Orlando Gasification Project at OUC's Stanton Energy Center near Orlando, Florida (Section 1.3). The proposed action described in the following sections is DOE's preferred alternative.

### 2.1.1 Project Location and Background

The proposed project would be located at OUC's existing Stanton Energy Center in eastern Orange County near Orlando, Florida (Figure 2.1.1). The site is located approximately 3 miles east of the eastern city limits of Orlando and about 13 miles east-southeast of the downtown area. Land use in the vicinity includes undeveloped areas interspersed with a mixture of residential and commercial buildings to the north, the Hal Scott Regional Preserve and Park to the east, the Florida Department of Corrections' Central Florida Reception Center to the southeast, and the municipal Orange County Sanitary Landfill to the west. The topography of the area is relatively flat.

The Stanton Energy Center site encompasses 3,280 acres, of which approximately 1,100 acres have been licensed by the state of Florida and have been developed for power generation and supporting facilities. Most of the remaining 2,180 acres are undisturbed, providing a natural buffer between the facilities and the surrounding offsite area. Figure 2.1.2 is an aerial photograph of the site and surrounding area.

The Stanton Energy Center currently generates electricity using two pulverized coal-fired units (Units 1 and 2), each rated at 468 MW, and a natural gas-fired combined-cycle unit (Unit A) rated at 633 MW. The site was certified as a power plant site through the Florida Electrical Power Plant Siting Act in December 1982, with an ultimate site generating capacity of 2,000 MW. Units 1 and 2 began commercial operation in July 1987 and June 1996, respectively. During initial site development, the facilities for coal delivery, handling, and storage and waste handling and disposal (i.e., an onsite landfill) were also constructed. Altogether, Units 1 and 2 combust about 2,360,000 tons per year of low-sulfur bituminous coal from the central Appalachian region, which is delivered to the site by rail. Units 1 and 2 are also permitted to burn natural gas and landfill gas. Unit A, which began commercial operation in October 2003, combusts about 20 million $ft^3$ of natural gas per year and is also permitted to burn distillate fuel oil.

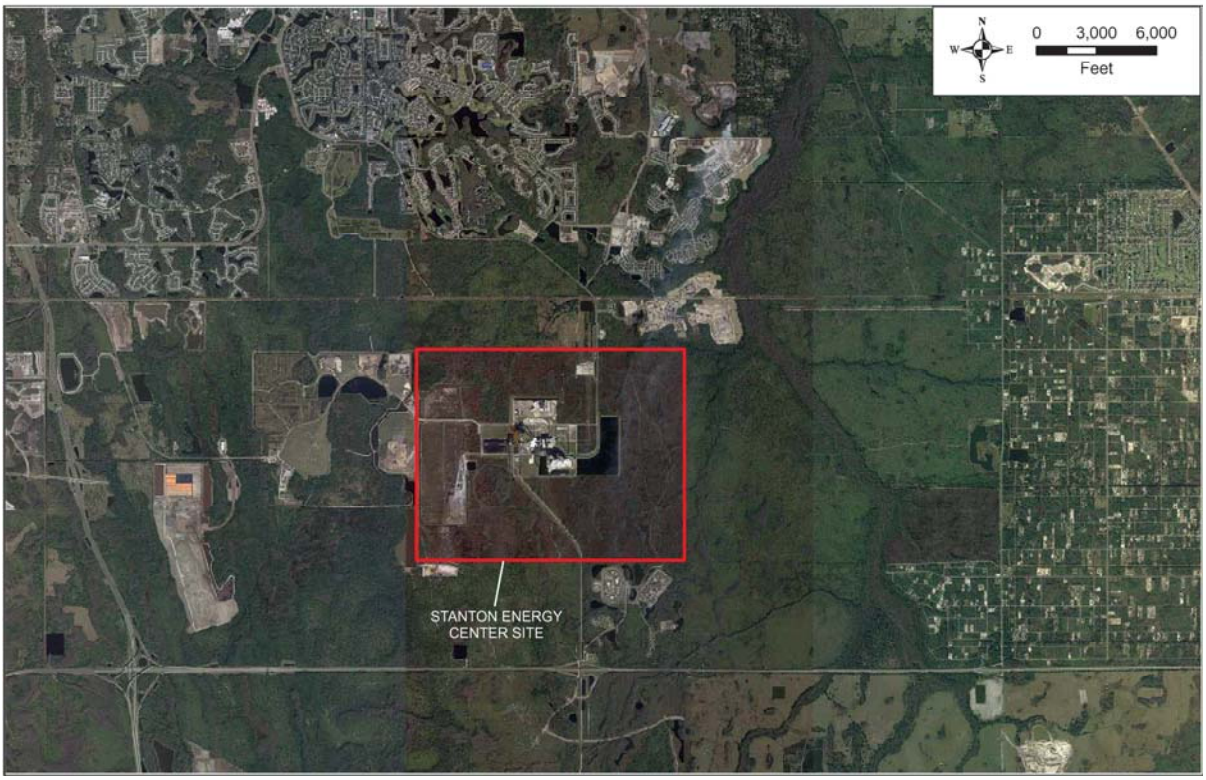


**Figure 2.1.2. Aerial photograph of the Stanton Energy Center site and surrounding area.**

Units 1 and 2 are each equipped with low-$NO_x$ burners to limit $NO_x$ formation, a wet limestone scrubber that captures 90% of $SO_2$ emissions, and an electrostatic precipitator that collects 99.9% of particulate emissions. In addition, Unit 2 has a selective catalytic reduction system to further reduce $NO_x$ emissions. Unit A is equipped with low-$NO_x$ burners and a selective catalytic reduction system.

The scrubbers for Units 1 and 2 use a total of approximately 50,000 tons per year of Florida limestone, which is trucked to the site. All of the sludge generated by the scrubbers is trucked to the onsite landfill. Some of the ash from Units 1 and 2 is blended with the scrubber sludge prior to disposal in the landfill, while some of the ash is sold for beneficial reuse (e.g., as construction material).

The principal existing structures at the Stanton Energy Center include the boiler buildings, turbine buildings, stacks, administration building, scrubbers, electrostatic precipitators, and natural- and mechanical-draft cooling towers. The site also contains a large make-up water pond where reclaimed water from the nearby Orange County Eastern Water Reclamation Facility is stored to provide cooling and other process uses within the plant.

The Stanton Energy Center is a zero-discharge facility regarding wastewater (i.e., no effluents are discharged off the site). All wastewater streams are recycled on the site. After maximum reuse,

wastewater is piped to an onsite wastewater treatment facility, where solid material is removed and trucked for disposal at the onsite landfill and water is recycled to the cooling towers.

The Stanton Energy Center has 204 full-time employees, 183 of whom operate Units 1 and 2, while 21 operate Unit A. Another 100 persons from specialty contractors are typically on the site at any given time. Road access to the site is primarily via Alafaya Trail and secondarily via Avalon Park Boulevard (Figure 3.7.1). Limited ingress/egress is allowed from/to the south via an access road connected to the BeeLine Expressway.

The Orlando Gasification Project would be constructed on approximately 35 of the 1,100 acres of land that were previously cleared, leveled, and licensed for power plant use (Section 2.1.5.1). The project equipment would be located between the existing coal-fired units and the existing natural gas-fired combined-cycle unit. A short transmission line (approximately 3,200 ft in length) proposed to serve as an electrical interconnection from the proposed facilities to an existing onsite substation would occupy a small amount of additional land.

### 2.1.2 Technology and Project Description

The proposed Orlando Gasification Project would demonstrate coal gasification, synthesis gas cleanup systems, and supporting infrastructure, which would be integrated with a combined-cycle power-generating unit to form IGCC technology. IGCC technology uses synthesis gas derived from coal to drive a gas combustion turbine and hot exhaust gas from the gas turbine to generate steam from water to drive a steam turbine. Combined, the two turbines would generate 285 MW (net) of electricity. This proven, reliable combined-cycle approach of using a gas turbine and steam turbine in tandem increases the amount of electricity that can be generated from a given amount of fuel. The project is expected to provide a source of electricity that is reliable, low-cost, environmentally-sound, and efficient (approximately 40% of the energy in the fuel would be converted to electricity compared to about 33% for a conventional coal-fired power plant).

While the proposed project consists of the gasifier, synthesis gas cleanup systems, and supporting infrastructure only, the EIS will address the construction and operation of the gas turbine and steam turbine as a related action (Section 2.2) and include the combined facilities in the analyses of environmental impacts because the facilities are so intertwined. Figure 2.1.3 provides a flow diagram of the proposed project and its integration with the combined-cycle unit.

The air-blown transport gasifier would be based on KBR’s fluidized catalytic cracker design. Southern Company and DOE have been developing the transport gasifier technology since 1996 at a research facility near Wilsonville, Alabama. At full capacity, the new gasifier would use a total of up to 3,300 tons of subbituminous coal per day to produce synthesis gas. The technology is unique among coal gasification technologies in that it is cost-effective when using low-quality coal, as well as coal with high moisture or high ash content. These coals comprise half the proven U.S. and worldwide reserves.

Because the design of the entire plant is highly dependent on the design fuel, the use of alternative coals (e.g., bituminous coal) is not considered practical for this proposed project. Additionally, the use of biomass feedstock is not considered feasible. Although pilot-scale research using biomass feedstock with IGCC technology is ongoing within Southern Company, biomass is not currently planned for the proposed facilities due to the challenges and uncertainties associated with material preparation and with feeding biomass into pressurized systems.

The proposed project would minimize $SO_2$, $NO_x$, mercury, and particulate emissions by removing constituents from the synthesis gas. The removal of approximately 80% of the fuel-bound nitrogen from the synthesis gas prior to combustion in the gas turbine would result in appreciably lower $NO_x$ emissions compared to conventional coal-fired power plants. The project is expected to remove up to 95% of the sulfur and over 90% of the mercury. Over 99.9% of particulate emissions would be removed using high-temperature, high-pressure filtration (rigid, barrier-type filter elements). Because the proposed project would be more efficient (i.e., about 40% of the energy in the fuel would be converted to electricity rather than 33%), approximately 25% less fuel would be required (assuming the same coal would be used) and 25% less carbon dioxide ($CO_2$) would be produced compared to typical emission rates at coal-fired power plants built before 1970. The proposed project would discharge no liquid effluent from the site. Ash generated by the gasifier would be combusted in the existing coal-fired units, marketed for use as activated carbon, or trucked to the existing onsite landfill for permitted disposal. Anhydrous ammonia and sulfur byproducts would be recovered and marketed. A key performance target for the proposed technology would be achieving gasifier availability of at least 80% without the use of a spare gasifier.

In addition to the gasifier and turbines, major new equipment for the project would include a 205-ft stack, 6-cell mechanical-draft cooling tower, synthesis gas cleanup facilities, and particulate filtration systems. Figure 2.1.4 is a computerized drawing of the proposed facilities superimposed on a photograph of the existing Unit A taken from the direction of the existing Units 1 and 2. The project would also require modifications to existing systems such as the coal conveyance and storage system. Wherever possible, existing facilities and infrastructure located at the Stanton Energy Center would be used for the proposed project. These include plant roads, administration building, coal delivery and handling facilities, ash handling and storage facilities, water and wastewater treatment systems, cooling water pond, and electric transmission lines and towers. However, the new 3,200-ft transmission line, including several new structures, would be required from the new turbines to the existing onsite substation to serve as an electrical interconnection.

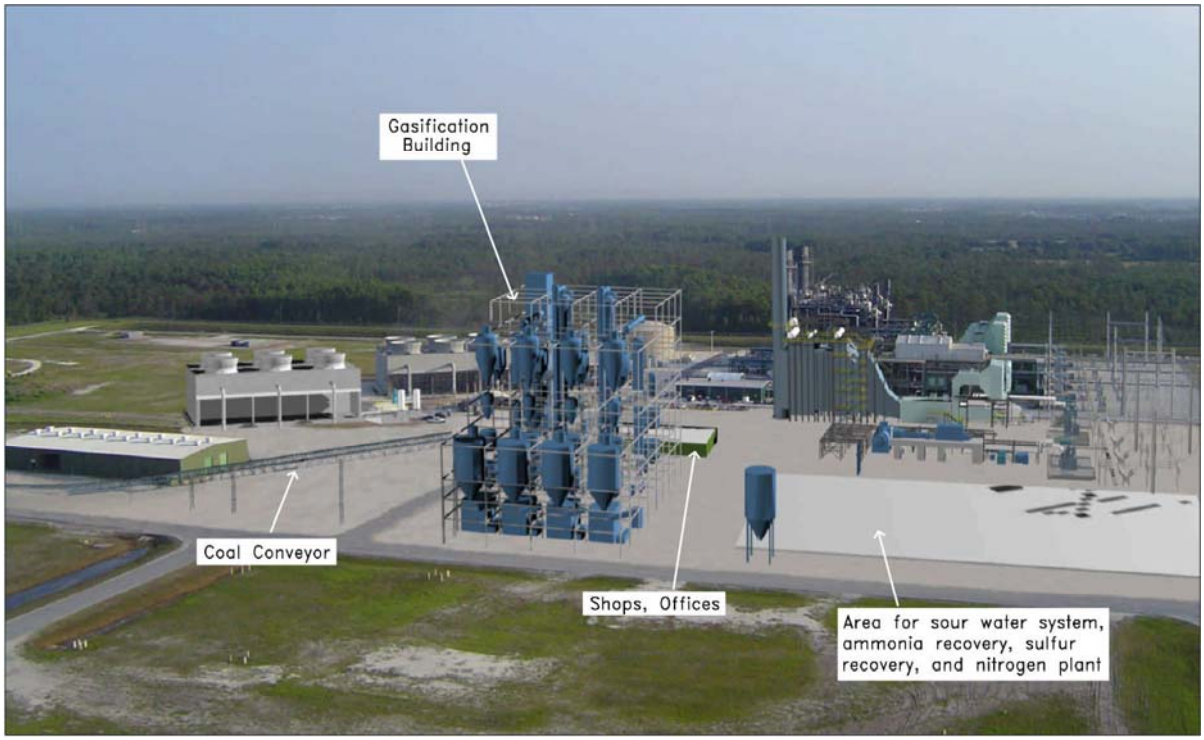


**Figure 2.1.4. Computerized drawing of the proposed facilities superimposed on a photograph of the existing Unit A taken from the direction of the existing Units 1 and 2.**

The plant would be designed to operate exclusively using low-sulfur subbituminous coal from Wyoming's Powder River Basin. The design coal feed rate to the gasifier would be approximately 137 tons per hour. Most of the sulfur and other pollutants in the coal would be removed from the synthesis gas before delivery to the gas turbine. The gasifier would produce approximately 450 tons of synthesis gas per hour with a lower heating value of about 125.7 British thermal units (Btu) per cubic foot. The following subsections provide details of the key processes within the gasification facilities.

### 2.1.2.1 Coal Preparation and Feeding

Two to three unit trains per week, each train composed of about 100 rail cars, would deliver subbituminous coal to the existing unloading system for Units 1 and 2. Coal would be unloaded within the existing rail unloading building via bottom dump rail cars. A conveyor would transport the coal into a hopper, and another conveyor would deliver it to a radial-pedestal stacker conveyor that would create a kidney-shaped coal pile with a capacity of 170,000 tons, which is equivalent to 45 days of storage at the design feed rate. The proposed project would use the existing coal storage area at the Stanton Energy Center, but a new coal pile would be formed because the coal would be

subbituminous while the coal used by the existing units is bituminous. The new coal pile would be outfitted with a synthetic liner and would use the existing leachate and stormwater runoff collection systems and a retention basin to prevent groundwater seepage and runoff from the area.

Coal from the pile would be conveyed to a single crusher that would reduce the coal size from 3 in. to 0.75 in., and the crushed coal would be conveyed to crushed coal silos. A screw conveyor would feed crushed coal from the storage silos to pulverizers, which would be roll-mill crushers with hot gas to dry the coal. The pulverized coal would be transferred by gravity to high-pressure coal feeders. The coal would enter the feeders at atmospheric pressure and the pressure would then be increased to the operating pressure of the gasifier.

#### 2.1.2.2 Gasifier

The gasifier would consist of an upright looped set of piping with a total height of approximately 160 ft (Figure 2.1.5). Coal, which would be injected near the top of the mixing zone, and air, which would be fed into the bottom of the mixing zone, would mix with gasifier ash recirculated through the J-valve from the standpipe. A total of nearly 350 tons per hour of compressed air would be supplied to the gasifier during operation. About 25% of the air would be extracted from the combined-cycle unit's gas turbine, while the remainder would be ambient air. Oxygen in the air would be consumed by carbon present in the recirculating ash, forming primarily carbon monoxide (CO). This reaction would release the heat required to maintain vessel temperature. The hot recirculating ash would heat the coal rapidly, minimizing tar formation, and the coal would be converted to synthesis gas.

Synthesis gas and gasification ash would pass from the mixing zone up the riser and then to a cyclone where larger, denser particles would be removed by gravity and fall into the standpipe. Synthesis gas would pass to a second cyclone where most of the remaining gasification ash would be removed and would pass into a loop seal. Gasification ash flowing through the cyclone loop seal would combine in the standpipe with gasification ash from the first cyclone. The combined stream would pass down the standpipe and through the J-valve into the mixing zone. To maintain constant gasifier bed inventory, gasification ash would be removed periodically from the lower section of the standpipe.

During gasifier startup, natural gas-fired burners would be used to heat the gasifier until reaching a sufficient temperature to initiate coal feed and gasification. Because the exhaust gas from the natural gas-fired burners would have little heating value, if the gas were sent to the flare (Section 2.1.2.8), natural gas would need to be added to produce a combustible mixture. Consequently, the exhaust gas would be vented to the startup stack instead of the flare. Once the gasifier would reach a sufficient temperature during startup, the injection of coal would begin and the air flow would be reduced until the atmosphere in the gasifier would form a reducing environment rather than an oxidizing environment. Subsequently, the coal would be gasified and synthesis gas would be produced. Because the flow of synthesis gas would initially be insufficient to send to the

gas turbine, it would be sent to the flare and burned. Prior to being released through the startup stack or burned by the flare, the exhaust gas or synthesis gas would pass through the gas cleanup process of

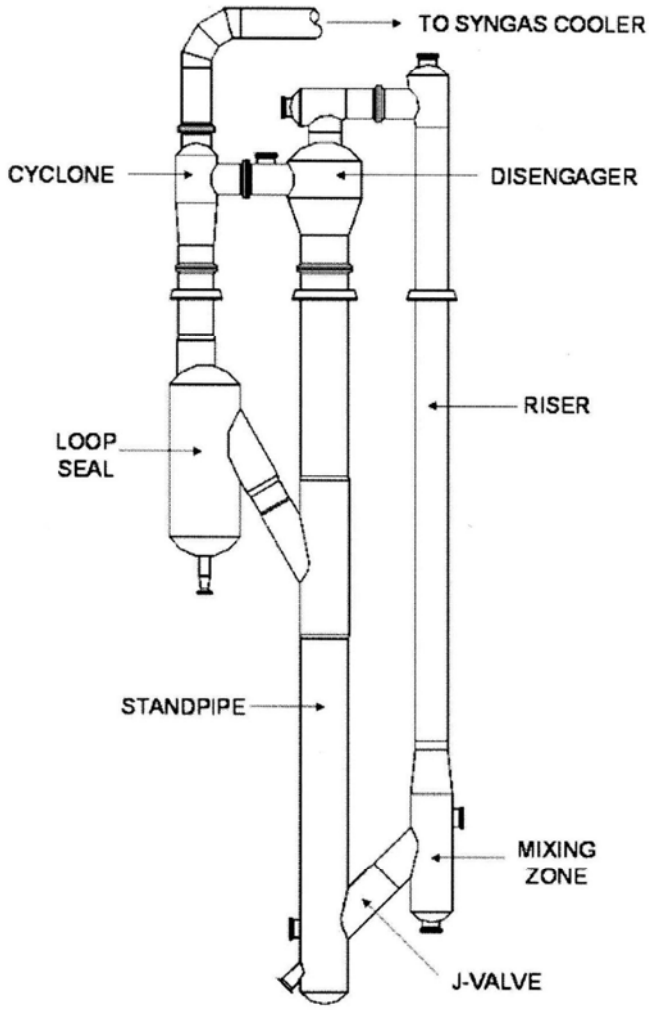


**Figure 2.1.5. Side view of a gasifier.**

the gasification facilities. When the gasifier would reach a gas production level sufficient to support the operation of the gas turbine, the synthesis gas would be diverted from the flare to the gas turbine.

The duration of the startup sequence would vary, depending on factors such as the starting temperature of the gasifier. During a cold start, up to 24 hours could elapse prior to sending synthesis gas to the gas turbine due to the time required to heat the gasifier refractory. The 24-hour period would include approximately 17 hours of exhausting gas through the startup stack and about 7 hours of combusting synthesis gas in the flare.

#### 2.1.2.3 High Temperature Synthesis Gas Cooling

Synthesis gas leaving the gasifier cyclone would pass via piping to a high-temperature synthesis gas cooler that would lower the gas temperature before it enters a high-temperature, high-pressure filter system. The heat transferred would be used to raise the temperature of high-pressure superheated steam.

The synthesis gas cooler would consist of three stages: an evaporator, a superheater, and an economizer. The evaporator would include a natural circulation steam drum operating at above steam turbine inlet pressure and at saturated temperature. The steam raised in the evaporator would be passed to a superheater that would heat the steam to the steam turbine inlet temperature. This steam would be mixed with superheated steam exiting the combined-cycle unit's heat recovery steam generator (HRSG) (Section 2.2) before passing into the steam turbine. Boiler feedwater would enter the economizer and would be heated to near saturation before entering the steam drum.

All three stages would use shell and tube heat exchangers, in which the particulate-laden synthesis gas would flow downward in a single pass through vertical tubes. The water or steam providing the cooling would flow upward in a single pass through the shell side of the exchangers.

#### 2.1.2.4 Particulate Removal

After cooling, synthesis gas would pass via piping to a high-temperature, high-pressure filter system for final particulate removal. The filter system would use rigid, barrier-type filter elements to remove essentially all of the particulate matter in the synthesis gas stream. Pulses of recycled, filtered synthesis gas would be used to remove accumulated particulate matter from the filters. Downstream of each filter element, a device would safeguard the combustion turbine from particulate-related damage in the event of a filter element failure.

Each of the two filter systems would remove approximately 5 tons per hour of particulate matter from the synthesis gas stream. The concentration of particulate matter in the cleaned synthesis gas is expected to be less than 0.1 part per million (ppm) by weight. The synthesis gas streams would exit the filter vessels and flow to the low-temperature heat recovery system. The removed particulate matter (fine ash) would be cooled and depressurized to atmospheric pressure before leaving the gasification facilities. The fine ash would flow down through a bank of cooling tubes to transfer heat to the condensate system. The cooled solids would pass into a continuous fine ash removal system.

### 2.1.2.5 Low Temperature Gas Cooling and Mercury Removal

Before the filtered synthesis gas would be combusted in the gas turbine, the gas would be cooled to the desulfurization process's operating temperature, which would facilitate removal of sulfur, mercury, nitrogen compounds, hydrocarbons, fluorides, and chlorides. Both coolers would condense water and certain hydrocarbons from the sour synthesis gas (i.e., synthesis gas prior to sulfur removal). The water would dissolve nearly all of the nitrogen compounds, chlorides, and fluorides present, as well as lesser amounts of $CO_2$, CO, hydrogen sulfide ($H_2S$), and carbonyl sulfide (COS). This aqueous mixture would be removed from the synthesis gas stream in a knockout drum after the last cooler and passed to the sour water treatment plant. A downstream aqueous scrubber would reduce ammonia and other constituents in the synthesis gas. The gas would then flow to the process area for $H_2S$ removal before re-entering the low-temperature gas cooling area to be reheated and conveyed for combustion in the gas turbine.

While being cooled, the gas would flow through additional gas cleanup processes, including a COS hydrolysis unit that would use an alumina-based catalyst to convert most of the COS to $H_2S$ for subsequent sulfur removal because the desulfurization process would not remove COS from the synthesis gas stream. A second reactor would consist of two packed beds of sulfur-impregnated activated carbon to remove mercury from the synthesis gas.

### 2.1.2.6 Sulfur Removal and Recovery

Synthesis gas would leave the low-temperature gas cooling system at slightly above ambient temperature and would enter the sulfur removal process. In this process, the synthesis gas would be contacted with a solvent to remove a high percentage of the $H_2S$ from the synthesis gas stream. The $H_2S$ in the solvent would be converted to elemental sulfur, which could be sold as a byproduct. The solvent would be regenerated and returned to the sulfur removal process. The sweet synthesis gas (i.e., synthesis gas after sulfur removal) would leave the contactor at slightly above ambient temperature and would then re-enter the low-temperature gas cooling process in which the synthesis gas would be heated before being combusted in the gas turbine.

Upon exiting the low-temperature gas cooling system, approximately 95% of the sweet synthesis gas would flow to the gas turbine, while the remaining 5% would pass to the synthesis gas recycle system. Some of the recycled synthesis gas would be sent to the pulse-gas reservoirs and used to pulse clean the high-temperature, high-pressure filters, while the remainder would be used for aeration in the gasifier.

### 2.1.2.7 Sour Water Treatment and Ammonia Recovery

The single sour water treatment and ammonia recovery unit would treat approximately 150 gallons per minute (gpm) of water removed during coal preparation, air compression, condensation from synthesis gas in the low-temperature gas cooling process, and sulfur removal. The combined water flow would pass to a filter to remove particulate matter and to an activated carbon bed to remove organic material before entering a degassing drum. The ammonia in the water would

retain most of the dissolved $H_2S$, and the gas released would primarily contain light hydrocarbons, which would pass to the vent gas recycle header. The filter cake and spent activated carbon would be removed periodically for disposal in a manner that complies with applicable regulations.

Next, the sour water would be heated and passed to the steam-heated $H_2S$ stripper where $H_2S$, hydrogen cyanide (HCN), CO, and $CO_2$ would be released and passed to the vent gas recycle header. The header synthesis gas stream would be compressed and injected into the oxidation zone of the gasifier, where the HCN would be destroyed. The water from the $H_2S$ stripper would discharge to the steam-heated ammonia stripper to produce a concentrated ammonia solution. The water drawn from the bottom of the ammonia stripper would be sufficiently pure for plant reuse.

The concentrated ammonia solution would be processed further in two additional steam-heated strippers, the first releasing any remaining dissolved $H_2S$ into the vent gas recycle header and the second increasing the ammonia concentration to 99.7%. The water drawn from the bottom of the columns would be sufficiently pure for plant reuse. The ammonia produced would be commercial-grade anhydrous ammonia, which OUC and Southern Company intend to use in the existing generating units at the Stanton Energy Center. Excess anhydrous ammonia could be sold in the commercial market.

Provisions would be made to recycle the ammonia to the mixing zone of the gasifier for destruction if removal of the anhydrous ammonia by truck were to be delayed and the storage tank were approaching full. The recycling of ammonia would be straightforward. The sour water treatment plant would operate at higher pressure, and when the ammonia gas were stripped off, it would be at a pressure of approximately 30 psi above gasifier pressure. Therefore, it need only be vented to the gasifier, and would enter the gasifier in the oxidizing zone for decomposition.

#### 2.1.2.8 Flare

The gasification facilities would be equipped with a flare to combust synthesis gas during startups and shutdowns and during plant upsets (e.g., a sudden shutdown of the combined-cycle unit's gas turbine). Under normal operation of the proposed facilities, only eight pilot lights would be operating. The pilot lights would operate continuously, each fired with natural gas at a flow rate of 80 $ft^3$ per hour.

A multipoint flare system, which is well proven in the petrochemical industry, would be used rather than the more conventional stack flare design. Figure 2.1.6 shows two photographs of multipoint flare systems similar to that planned for the proposed project. The multipoint flare system was developed to resolve aesthetic issues associated with stack flares. Instead of a 100- to 200-ft single stack with a single flame that may rise several hundred feet above the stack, the multipoint flare divides the gas into a number of smaller flames. A 20-ft tall thermal barrier fence surrounds the burners, which are located approximately 10 ft above ground level. For this project, the footprint of the flare system would be approximately 214 ft by 123 ft.

**Figure 2.1.6. Two photographs of multipoint flare systems similar to that planned for the proposed project.**

At full load, flame temperature would be approximately 1,800°F and flame height would rise to about 40 ft above the burners. The flames would be smokeless and nearly invisible during the day, except for shadows from heat effects. At night, a blue/purple flame would be visible above the thermal barrier.

### 2.1.3 Construction Plans

Construction of the proposed facilities would begin in late 2007 and continue until early 2010. Because the proposed project site was cleared and graded during construction of the existing facilities at the Stanton Energy Center (Section 2.1.1), additional clearing and grading would be minimal (e.g., the site would be graded for stormwater runoff directed to existing retention ponds). Site preparation would involve construction of load-bearing concrete piers and foundations for heavy and settlement-sensitive structures. Excavation would be performed for footings and grade beams. Soil removed during site preparation would be stored in stockpiles and later spread on finished graded areas. Following site preparation, other phases of construction would include mechanical installation, piping interconnection, electrical installation, and instruments and controls configuration.

Construction materials would consist primarily of structural steel beams and steel piping, tanks, and valves. Locally obtained materials would include crushed stone, sand, and lumber for the proposed facilities and temporary structures (e.g., enclosures, forms, and scaffolding). Components of the facilities would also include concrete, ductwork, insulation, electrical cable, lighting fixtures, and transformers. Most of the materials would be delivered to the site by truck. If economically feasible, heavier components could be delivered by rail to the existing onsite rail loop. Construction equipment would include cranes, forklifts, air compressors, welding machines, trucks, and trailers. An average of about 30 vehicles would be used for construction activities on the site.

During the 28-month construction period, an average of about 350 construction workers would be on the site during construction of the gasification facilities and the combined-cycle power-generating unit (the related action discussed in Section 2.2). Approximately 600 to 700 workers would be required during the peak construction period between fall 2008 and spring 2009. Of this combined workforce (i.e., including the proposed project and the related action), the combined-cycle unit would require a slightly greater peak workforce, but the gasification facilities would require workers for a slightly longer construction period. Most construction would occur during daylight hours, with the majority of construction workers being present on the site between 7 a.m. and 5:30 p.m.

Land requirements during construction and operation are discussed in Section 2.1.5.1.

### 2.1.4 Operational Plans

After mechanical checkout of the proposed facilities, demonstration (including data analysis and process evaluation) would be conducted over a 4.5-year period from mid 2010 until late 2014. During the demonstration, the test program would focus on achieving reliable plant operation (at least 80%

gasifier availability) with high thermal efficiency, low emissions, equipment performance improvement, and low operation and maintenance costs. Workers would include a mix of plant operators, craft workers, managers, supervisors, engineers, and clerical workers. An average of about 20 vehicles would be used for operational activities on the site.

If the demonstration is successful, commercial operation would follow immediately (Section 5). The facilities would be designed for a lifetime of at least 20 years, including the 4.5-year demonstration period. An extension beyond 20 years would be based on economic analysis at that time.

Staff size would vary between the demonstration period and the period of commercial operation. Operations staff would be assembled during the last 18 months of construction for training and to assist with startup of the facilities. The combined workforce (i.e., including the proposed project and the related action) would consist of approximately 72 employees added to existing Stanton Energy Center staff. Of those 72 employees, 19 workers would provide support only during the startup and demonstration phases of the project, while 53 employees would be needed over the lifetime of the facilities (i.e., during startup, demonstration, and commercial operation).

For the proposed project alone, the size of the day shift crew would range from 57 during startup and demonstration to 38 during commercial operation. The size of the night shift crew would be about five to seven employees for the lifetime of the facilities. The staff would work two 12-hour shifts a day, with shift changes expected around 5:30 a.m. and 5:30 p.m.

### 2.1.5 Resource Requirements

Table 2.1.1 summarizes the operating characteristics, including resource requirements, for the proposed facilities, including the related action of the combined-cycle power-generating unit (Section 2.2).

#### 2.1.5.1 Land Area Requirements

Figure 2.1.7 displays a preliminary layout of the proposed facilities within the Stanton Energy Center site. The project would be constructed on approximately 35 of the 1,100 acres of land that were previously cleared, leveled, and licensed for power plant use. The project equipment would be located between the existing coal-fired Units 1 and 2 and the existing natural gas-fired Unit A. An existing temporary warehouse might be dismantled to accommodate the ancillary facilities required by the proposed project.

A short onsite transmission line (approximately 3,200 ft in length) proposed to serve as an electrical interconnection from the proposed facilities to an existing onsite substation to the northeast would occupy a small amount of additional land, which would extend beyond the 1,100-acre developed area of the power plant site. Including the 80-ft wide right-of-way for the transmission line, the total area for the transmission corridor would be slightly less than 6 acres.

**Table 2.1.1. Expected operating characteristics of the proposed Integrated Gasification Combined Cycle (IGCC) project and the existing units at the Stanton Energy Center[a]**

| Operating characteristics | Existing Units 1 and 2 | Existing Unit A | Proposed IGCC project | Stanton Energy Center total (with IGCC) |
|---|---|---|---|---|
| Generating capacity (MW) | 936 | 633 | 285 | 1,854 |
| Capacity factor (%)[b] | 80 | 90 | 85 | — |
| Power production (MW-hr/yr) | 6,200,000 | 2,600,000 | 2,100,000 | 10,900,000 |
| Coal consumption (tons/year) | 2,360,000[c] | 0 | 1,020,000[d] | 3,380,000 |
| Limestone consumption (tons/year) | 50,000 | 0 | 0 | 50,000 |
| Production (use) of ammonia (tons/year) | (700) | (80) | 7,300 | 6,520 |
| Natural gas consumption ($10^6$ $ft^3$/year) | 2[e] | 19,400 | 940 | 20,342 |
| Fuel oil consumption ($10^3$ gal/year) | 850 | 127 | 0 | 879 |
| Water requirements | | | | |
| Reclaimed water (net; gpm) | 8,811[f] | | 1,531 | 10,342 |
| Groundwater (gpm) | 326[f] | | 80 | 406 |
| Air emissions (tons/year)[g] | | | | |
| Sulfur dioxide ($SO_2$) | 6,800 | 18 | 137 | 6,955 |
| Oxides of nitrogen ($NO_x$) | 9,325/8,300[h] | 177 | 855 | 9,332 |
| Particulate matter (PM-10) | 400 | 100 | 160 | 660 |
| Carbon monoxide (CO) | 800 | 20 | 556 | 1,376 |
| Volatile organic compounds (VOCs) | 90 | 21 | 110 | 221 |
| Carbon dioxide ($CO_2$) | 7,118,500 | 1,240,000 | 1,809,000 | 10,167,500 |
| Wastewater (gpm) | All wastewater streams processed/reused on the site | | | |
| Solid wastes (tons/year) | | | | |
| Blended ash and scrubber sludge | 503,500 | 0 | 0 | 503,500 |
| Gasification ash | 0 | 0 | 68,000 | 68,000 |
| Byproducts (tons/year) | | | | |
| Anhydrous ammonia | 0 | 0 | 7,300 | 7,300 |
| Sulfur | 0 | 0 | 2,800 | 2,800 |

[a]All resource consumption, outputs, emissions, effluents, and wastes are estimated based on stated capacity factors and are not meant to be representative of any specific time period.

[b]Capacity factor is the percentage of energy output during a period of time compared to the energy that would have been produced if the equipment operated at its maximum power throughout the period.

[c]Based on bituminous coal from the central Appalachian region with a heating value averaging 12,700 Btu/lb.

[d]Based on subbituminous coal from the Powder River Basin in Wyoming with a heating value averaging 8,760 Btu/lb.

[e]Landfill gas.

[f]Combined water requirements for existing Units 1, 2, and A.

[g]Emissions from the main combustion units, material handling, and other sources.

[h]For purposes of netting of $NO_x$, baseline emissions from Units 1 and 2 combined are 9,325 tons per year using calendar year 2004 and 2005. After the start of the demonstration period for the proposed facilities, the $NO_x$ emissions from Units 1 and 2 would be limited to 8,300 tons per year.

Coal for gasification would be stored in a separate pile occupying about 10 acres (included as part of the 35-acre total) immediately north of the existing coal piles for Units 1 and 2 (Figure 2.1.7). Figure 2.1.7 also shows the existing 347-acre onsite landfill, at which up to 25 acres (not included in the 35-acre total) could be required over the lifetime of the facilities assuming all of the gasification ash would be transported to the landfill for disposal (landfill disposal is one of three options, as discussed in Section 2.1.6.3).

About 20 acres of land would be required during construction for equipment/material laydown, storage, assembly of site-fabricated components, staging of material, and facilities to be used by the construction workforce (i.e., offices and sanitary facilities). About 5 acres would be needed as a parking lot to accommodate construction workers' vehicles. The land for these temporary facilities would also be situated between Units 1 and 2 and Unit A (Figure 2.1.7).

### 2.1.5.2 Water Requirements

Water would be used during construction of the proposed facilities for various purposes including personal consumption and sanitation, concrete formulation, preparation of other mixtures needed to construct the facilities, equipment washdown, general cleaning, dust suppression, and fire protection. Service water for construction activities would be obtained from reclaimed water in the Stanton Energy Center's onsite makeup pond. Potable water associated with construction activities would be obtained from groundwater drawn from onsite wells. Use of potable water during construction would average about 1 gpm. Portable toilets would minimize requirements for additional sanitary water.

During operation, all water for process and potable needs would be obtained from existing Stanton Energy Center sources. Figure 2.1.8 presents a simplified water balance diagram for the proposed facilities. The principal water uses (cooling water and service water) would be supplied from the onsite makeup pond, which receives treated effluent from the nearby Eastern Water Reclamation Facility, recycled onsite wastewaters, and stormwater from the Orange County municipal landfill. Based on annual requirements, the new 6-cell cooling tower would need approximately 1,853 gpm of treated effluent from the onsite storage pond to use as makeup water, which would replace cooling tower evaporative losses and blowdown (i.e., water discharged from the cooling tower to limit the concentration of total dissolved solids). About 80% of the cooling water demand would result from the combined-cycle unit's operation, while the remaining 20% would be attributable to the gasification facilities. About 4 gpm of water droplets would escape beyond the cooling towers' drift water eliminators to the atmosphere.

Chemicals for biocide and corrosion inhibition would be injected into the cooling tower water. Gaseous chlorine would be fed continuously into the system as a biocide. Sulfuric acid would be injected to reduce alkalinity, thereby controlling scaling. A silt dispersant and an iron dispersant would likely be used in the cooling water also.

Groundwater from onsite wells would be used as a source of water for potable use (less than 1 gpm) and demineralized water to replace HRSG blowdown and steam losses (74 gpm). Demineralized water would be produced by the existing Stanton Energy Center demineralizer; a few gpm of groundwater would be consumed in demineralization and water treatment. The incremental requirement of groundwater from onsite wells would be within existing permitted limits established for the Stanton Energy Center.

#### 2.1.5.3 Fuel and Other Material Requirements

The new coal gasifier would operate entirely on coal, consuming a total of approximately 1,020,000 tons per year to produce synthesis gas. Two to three trains per week would deliver low-sulfur subbituminous coal from the Powder River Basin in Wyoming. The heating value of the coal would average about 8,760 Btu/lb and the sulfur content would average about 0.26%. Table 2.1.2 presents a range for the expected composition of the coal. No limestone would be used by the proposed facilities. Small quantities of process chemicals, paints, degreasers, and lubricants would be consumed, as at any industrial facility.

The gas combustion turbine would be capable of continuous, full-load operation firing either synthesis gas or natural gas. Natural gas used in the combustion turbine and duct burners, as well as for coal gasifier startup, would be supplied by the existing pipeline that serves Unit A. No upgrades or major modifications to the existing natural gas supply facilities would be required. Natural gas would not be stored on the site. When operating on natural gas, the combined-cycle power-generating unit (Section 2.2) would consume approximately 2 million $ft^3$ of natural gas per hour at full load with duct burners operating.

### 2.1.6 Outputs, Discharges, and Wastes

Table 2.1.1 includes a summary of discharges and wastes for the proposed facilities, including the related action of the combined-cycle power-generating unit (Section 2.2).

#### 2.1.6.1 Air Emissions

During construction, workers' vehicles, heavy construction vehicles, diesel generators, and other machinery and tools would generate emissions. Fugitive dust would result from excavation, soil storage, and earthwork.

During operation of the proposed facilities, handling and storage of coal and gasification ash would generate fugitive particulate emissions. For coal handling, particulate control would include rail car unloading in the existing enclosed building, water sprays in enclosed coal conveyors, and baghouses at key transfer locations. Gasification ash conveyors would be enclosed, and ash would be wetted to reduce potential fugitive dust emissions during handling. The area's high humidity, frequent rainfall, and lack of high winds would reduce particulate emissions from uncovered coal at the storage area and from equipment operation on the roads.

**Table 2.1.2. Analysis of the composition of subbituminous coal expected to be received for the proposed Orlando Gasification Project**

| Characteristic | Minimum | Maximum |
|---|---|---|
| *Proximate (as received)* | | |
| Heating value (Btu/lb) | 8,300 | 8,884 |
| Analysis (percent by weight) | | |
| Moisture | 26.5 | 30.6 |
| Ash | 4.4 | 5.5 |
| Volatile matter | 30.3 | 31.7 |
| Fixed carbon | 32.9 | 37.1 |
| Sulfur | 0.2 | 0.4 |
| *Proximate (dry)* | | |
| Heating value (Btu/lb) | 11,942 | 12,127 |
| Analysis (percent by weight) | | |
| Ash | 6.1 | 7.4 |
| Volatile matter | 42.8 | 45.3 |
| Fixed carbon | 47.4 | 51.1 |
| Sulfur | 0.3 | 0.6 |
| *Ultimate (as received)* | | |
| Analysis (percent by weight) | | |
| Moisture | 26.5 | 30.6 |
| Carbon | 48.6 | 52.2 |
| Hydrogen | 3.2 | 3.8 |
| Nitrogen | 0.6 | 0.8 |
| Chlorine | 0.0 | 0.01 |
| Sulfur | 0.2 | 0.4 |
| Ash | 4.4 | 5.5 |
| Oxygen | 10.7 | 12.4 |
| *Ultimate (dry)* | | |
| Analysis (percent by weight) | | |
| Carbon | 69.9 | 71.2 |
| Hydrogen | 4.6 | 5.2 |
| Nitrogen | 0.9 | 1.1 |
| Chlorine | 0.01 | 0.01 |
| Sulfur | 0.3 | 0.6 |
| Ash | 6.1 | 7.4 |
| Oxygen | 14.7 | 17.0 |

Fugitive emissions of gaseous compounds could be generated from the facilities due to leaks from equipment such as valves, compressor seals, and flanges. These emissions would be minimized by proper maintenance practices. In addition, area gas detectors would be used to alert plant staff of fugitive gas emissions.

Most emissions would result from combustion of synthesis gas in the gas combustion turbine during normal operations. The exhaust gas would be released to the atmosphere via the 205-ft HRSG stack. Table 2.1.3 presents stack emissions at full load; annual emissions in this table are conservatively based on continuous year-round operation (100% capacity factor). The principal pollutants would be $SO_2$, $NO_x$, particulate matter, CO, and volatile organic compounds (VOCs). Trace emissions of other pollutants would include formaldehyde, toluene, xylenes, carbon disulfide, acetaldehyde, mercury, beryllium, benzene, arsenic, and others (Table 2.1.3). The list of trace compounds present in flue gas from synthesis gas combustion is based on measurements made at the Louisiana Gasification Technology IGCC project (Radian, 1995).

During gasifier startups, exhaust gas would be released for up to 17 hours through the startup stack, and synthesis gas would be combusted for up to 7 hours in the flare (Section 2.1.2.2). In the unusual event of a process upset involving the gasifier or the combined-cycle unit, synthesis gas would be routed to the flare for combustion. The duration of synthesis gas combustion would vary depending upon the type of upset. Under normal operation of the proposed facilities, minimal emissions would result from the flare because only the eight natural gas-fired pilot lights would be operating (Section 2.1.2.8).

### 2.1.6.2 Liquid Discharges

During operation, the proposed facilities would produce various process wastewaters, all of which would be discharged to the existing Stanton Energy Center treatment and reuse systems. No process waste streams or water treatment discharges would be released off the site. The principal wastewater streams, which would result primarily from the combined-cycle unit (Section 2.2), would include about 231 gpm of cooling tower blowdown conveyed to the existing wastewater treatment plant and about 134 gpm of low-volume wastes (e.g., sour water cleanup wastes, oil/water separator wastes, condensation from the air compressors) conveyed to the existing recycle basin. All treated blowdown and wastewater would be discharged to onsite systems.

Stormwater would be routed to culverts and directed to existing, onsite stormwater retention ponds. Runoff from areas associated with industrial activity, including the coal storage area, and equipment and floor drains would be routed for pH adjustment, oil separation, and suspended solids removal. Treated stormwater would then be discharged to the recycle basin for reuse.

**Table 2.1.3. Estimates of air pollutant emissions from proposed HRSG stack[a]**

| Pollutant | Short-term synthesis gas (lb/hour) | Short-term natural gas (lb/hour) | Maximum annual (lb/year) |
|---|---|---|---|
| Sulfur dioxide ($SO_2$) | 35.9 | 1.4 | 314,000 |
| Oxides of nitrogen ($NO_x$) | 225.4 | 42.1 | 1,974,000 |
| Particulate matter (PM-10) | 35.8 | 23.2 | 314,000 |
| Carbon monoxide (CO) | 140.5 | 138.0 | 1,231,000 |
| Volatile organic compounds (VOCs) | 26.9 | 29.3 | 257,000 |
| Lead | 0.0069 | 0.00085 | 60 |
| | | | |
| Antimony | 0.0095 | — | 83 |
| Arsenic | 0.0050 | — | 44 |
| Beryllium | 0.00022 | — | 1.9 |
| Cadmium | 0.0069 | — | 60 |
| Chromium | 0.0064 | — | 56 |
| Cobalt | 0.0014 | — | 12 |
| Manganese | 0.0074 | — | 65 |
| Mercury | 0.0022 | — | 19 |
| Nickel | 0.0093 | — | 81 |
| Selenium | 0.0069 | — | 60 |
| Acenaphthyalene | 0.000062 | — | 0.54 |
| Acetaldehyde | 0.0043 | 0.070 | 610 |
| Benzaldehyde | 0.0069 | — | 60 |
| Benzene | 0.012 | 0.022 | 190 |
| Benzo(a)anthracene | 0.0000055 | — | 0.048 |
| Benzo(e)pyrene | 0.000013 | — | 0.11 |
| Benzo(g,h,i)perylene | 0.000023 | — | 0.20 |
| Carbon disulfide | 0.11 | — | 960 |
| Formaldehyde | 0.080 | 0.57 | 5,000 |
| 2-Methylnaphthalene | 0.00086 | — | 7.5 |
| Naphthalene | 0.0013 | 0.0026 | 23 |
| 1,3-Butadiene | — | 0.00075 | 6.6 |
| Acrolein | — | 0.011 | 98 |
| Ethylbenzene | — | 0.056 | 492 |
| Polycyclic aromatic hydrocarbons | — | 0.0039 | 34 |
| Propylene oxide | — | 0.051 | 450 |
| Toluene | — | 0.23 | 2,000 |
| Xylenes | — | 0.11 | 980 |

[a]All estimates based on full-load operating scenarios with duct burner firing and an average ambient temperature. Annual emissions conservatively assume continuous, year-round operation using higher of synthesis gas or natural gas hourly emission rate.

Area drains would collect liquid from periodic equipment washdown, as well as unexpected chemical spills or tank overflows. The collected chemical drain effluent would be routed to the waste neutralization system for pH adjustment. Wastewater containing oils (e.g., stormwater runoff, equipment washdown water) would be collected in an oily wastewater sump, and an oil/water separator would remove the oils. Domestic and sanitary wastewater generated by operations personnel would be discharged to a new septic system that would be constructed near the new facilities (OUC 2006).

Chemical wastes would be generated from periodic cleaning of the HRSG and turbines. These wastes would consist of alkaline and acidic cleaning solutions, turbine washwaters, and HRSG washwaters. These wastes likely would contain high concentrations of heavy metals. Chemical cleaning would be conducted by outside contractors who would be responsible for removal of associated waste products from the site.

#### 2.1.6.3 Solid Wastes

##### Construction

During construction of the proposed facilities, potential waste could include metal scraps, electrical wiring and cable, surplus consumable materials (e.g., paints, greases, lubricants, and cleaning compounds), packaging materials, and office waste. However, much of these materials would be retained at the Stanton Energy Center for future use, and the recyclable paper would periodically be collected and transferred to environmental waste recycling facilities. Metal scraps unsuitable for use at the Stanton Energy Center would be sold to scrap dealers, while the other remaining materials would be collected in dumpsters and periodically trucked off the site by a waste management contractor for disposal in a licensed landfill. These other materials would include packaging material (e.g., wooden pallets and crates), support cradles used for shipping of large vessels and heavy components, and cardboard and plastic packaging.

No hazardous waste generation is anticipated during construction. If any hazardous waste, as defined under the Resource Conservation and Recovery Act (RCRA), were generated as a result of project construction, such small quantities would be handled in accordance with standard procedures currently employed at the Stanton Energy Center.

##### Operation

During operation of the proposed facilities, the primary solid wastes or byproducts would be gasification ash and elemental sulfur. The gasification process would produce approximately 9 tons per hour of gasification ash from accumulation of noncombustible mineral material originally present in the coal. Based on an 85% capacity factor (the expected percentage for the proposed IGCC facilities), about 68,000 tons of ash would be produced annually. The ash, which would be a fine powder sized at about 15 to 20 µm, would be removed from the gasifier and high-temperature, high-

pressure filters and stored in an adjacent silo. Prior to ash transfer, water would be added to the ash at a ratio of approximately one to one (by weight) to moisten the ash and minimize dust emissions.

Test results using ash samples from the research facility near Wilsonville, Alabama, indicate that the gasification ash would meet all regulatory requirements for nonhazardous material (i.e., toxicity, ignitability, corrosivity, and reactivity). Therefore, the ash would not be classified as hazardous, and disposal requirements would be similar to requirements for fly ash. Table 2.1.4 characterizes the composition of the gasification ash on a dry basis.

**Table 2.1.4. Expected characteristics of gasification ash generated by the proposed Orlando Gasification Project**

| Characteristic | Percent by weight |
|---|---|
| *Proximate* | |
| Volatiles | 10.3 |
| Fixed carbon | 24.9 |
| Ash | 64.6 |
| Sulfur | 0.2 |
| *Ultimate* | |
| Carbon | 33.1 |
| Hydrogen | 0.4 |
| Nitrogen | 0.2 |
| Oxygen | 1.6 |
| Sulfur | 0.2 |
| Ash | 64.6 |
| *Ash mineral as oxide* | |
| Silicon dioxide | 39.7 |
| Aluminum oxide | 13.9 |
| Calcium oxide | 27.8 |
| Magnesium oxide | 9.4 |
| Sodium monoxide | 1.3 |
| Potassium monoxide | 0.8 |
| Iron oxide | 5.2 |
| Titanium dioxide | 1.1 |
| Phosphorus pentoxide | 0.8 |

Three options for management of the gasification ash are possible: (1) combining the ash with coal entering the existing Units 1 and/or 2 for combustion in the boilers, (2) marketing the ash as a useful byproduct, and (3) transporting the ash for disposal in the onsite landfill. Because the gasification ash would have a heating value of approximately 4,000 Btu/lb, the ash could be combusted in Units 1 and/or 2. The ash would be pneumatically conveyed to the existing units. Because the amount of gasification ash would be a small percentage of the coal combusted in the boilers, it should not affect either marketability or disposal requirements of the combustion ash from the existing units. The addition of the gasification ash would reduce the coal feed rate to the total of both existing units by about 1% from approximately 350 tons per hour to 347 tons per hour.

If combusting the gasification ash in the existing Units 1 and 2 were not viable, the ash could be sold commercially to reduce the amount sent to the onsite landfill. Potential commercial applications include using the ash as a source for activated carbon and as a fuel source for the cement industry. Evaluation of the ash as an activated carbon source revealed that its characteristics are similar to those of commercial carbons. Potential use of the ash for higher-grade activated carbon would be possible following beneficiation by chemical activation and acid washing. Evaluation of the ash as a fuel source for the cement industry revealed the potential for the ash to be mixed with the raw material in a cement kiln. Because the offsite transport of gasification ash for commercial applications would require approximately 160 truck loads per week, rail transport would be investigated as an alternative. Any gasification ash not used for combustion in the existing units or sold as a marketable byproduct would be trucked to the onsite landfill.

The gas cleanup system would produce approximately 760 lb per hour of 99% pure elemental sulfur, which would be stored in an adjacent silo sized to hold a 30-day supply. Based on an 85% capacity factor for the proposed IGCC facilities, about 2,800 tons of sulfur would be produced annually. About three truck loads per week would be required to transport the sulfur off the site for commercial applications. If the sulfur could not be sold, it would be trucked for disposal in the onsite landfill.

Other solid wastes would include solids from water and wastewater treatment systems (e.g., sour water treatment), demineralizer resin beds, used air inlet filters, and other maintenance-related wastes such as rags, broken and rusted metal and machine parts, defective or broken electrical materials, and empty containers. Nonhazardous wastes would be transported off the site for disposal in a licensed landfill. Any waste determined to be hazardous under RCRA regulations would be transported off the site by a licensed contractor to a RCRA-permitted treatment and disposal facility or returned to the manufacturer for treatment and recycling (Section 2.1.6.4).

In addition to process wastes, solid wastes generated during facility operation would include used office materials and packaging materials. The disposition of these items would be similar to that discussed previously for these materials during the construction period.

#### 2.1.6.4 Toxic and Hazardous Materials

Operation of the proposed facilities would involve potentially toxic or hazardous materials and wastes generated during operation, including waste paints, solvents, oils, and empty material containers. Hazardous wastes generated during operation would be removed from the site by a waste management contractor at regular intervals and trucked to authorized facilities for disposal.

Approximately 1 ton per hour of anhydrous ammonia (99.7% pure) would be produced as a byproduct of the gasification process and stored in an adjacent tank. Based on an 85% capacity factor for the proposed IGCC facilities, about 7,300 tons of ammonia would be produced annually. The existing onsite selective catalytic reduction systems on Units 2 and A would be consumers of the ammonia produced by the proposed facilities. However, even assuming the proposed facilities were the sole supplier of ammonia for these onsite systems, about 1,600 lb per hour would not be needed and would be transported off the site by truck or rail to be sold commercially. If shipped by truck, approximately six trucks per week would be required. The current once-weekly truck delivery of anhydrous ammonia to the site for use by the existing systems would no longer be needed.

Alumina-based catalysts used to convert carbonyl sulfide to hydrogen sulfide for sulfur removal would be regenerated and reused if possible. Approximately 2,000 $ft^3$ of these catalysts would require replacement about once every 3 years. Approximately 3,400 $ft^3$ of sulfur-impregnated activated carbon used for mercury removal would be replaced about once every 12 to 18 months. This mercury sorbent would likely be considered as hazardous waste. Approximately 3,400 $ft^3$ of activated carbon used for sour water treatment would be landfilled about once per month. Used oils collected from the oil/water separator, spent lubricating oils, and used oil filters from the gas combustion turbine would be transported off the site by an outside contractor for recycling or disposal. Potential sulfur removal chemicals used by the proposed facilities would be characterized for waste treatment requirements. Any waste determined to be hazardous under RCRA regulations would be transported off the site by a licensed contractor to a RCRA-permitted treatment and disposal facility or returned to the manufacturer for treatment and recycling.

The facilities would implement a program to reduce, reuse, and recycle materials to the extent practicable. All light bulbs would be treated as hazardous waste and transported to properly licensed facilities for disposal. The facilities would have a Spill Prevention, Control, and Countermeasures Plan (SPCCP) (40 CFR Part 112) addressing the accidental release of materials to the environment.

## 2.2 RELATED ACTION

In addition to the proposed Orlando Gasification Project, Southern Company and OUC plan to construct and operate a combined-cycle power-generating unit adjacent to the proposed project and integrate it with the proposed project to demonstrate IGCC technology. Synthesis gas produced by the proposed project would drive a gas combustion turbine, and hot exhaust gas from the gas turbine would generate steam from water to drive a steam turbine. Combined, the gas turbine and steam turbine would generate 285 MW (net) of electricity. This proven, reliable combined-cycle approach

of using a gas turbine and steam turbine in tandem increases the amount of electricity that can be generated from a given amount of coal. The combined-cycle unit would include a heat recovery steam generator (HRSG) and associated auxiliary and control systems. Figure 2.2.1 provides a schematic of the combined-cycle system, including the gas combustion turbine, steam turbine, HRSG, and other key components.

The gas turbine would convert energy stored in the synthesis gas into mechanical energy using compressed hot gas (i.e., air and products of combustion) as the working medium. The gas turbine would deliver mechanical energy using a rotating shaft to drive an electrical generator, thereby converting a portion of the mechanical output to electrical energy. Initially, ambient air would be filtered and then compressed by the gas turbine's compressor section, which would increase the pressure of the combustion air stream and also raise its temperature. The compressed combustion air would then be combined with synthesis gas, which would be ignited in the gas turbine's high-pressure combustor to produce hot exhaust gases. These high-pressure, hot gases would expand and drive the turbine section to produce rotary shaft power and electricity.

The heat in the gas turbine's exhaust gases would be used to generate steam from water in an HRSG. The HRSG would be equipped with natural gas-fired duct burners to boost power generation capability during periods of peak demand. The steam would be used to drive a steam turbine and generator to produce additional electricity. The HRSG would be constructed to allow only combined-cycle operation (i.e., the gas turbine would not have a bypass stack allowing simple-cycle operation of the gas turbine alone).

High-pressure superheated steam from the synthesis gas cooler and the HRSG would enter the steam turbine. Steam exhausted from the high-pressure portion of the steam turbine would be reheated in the HRSG, expanded through the intermediate- and low-pressure portions of the steam turbine, and then condensed. The combined-cycle unit would be equipped with a 6-cell wet mechanical-draft cooling tower to provide the cooling necessary to condense the steam.

Construction and installation of the combined-cycle facilities would be completed approximately 6 months prior to gasifier completion and integration of the facilities. The gas turbine would be capable of operating on either natural gas or synthesis gas. During occasions when synthesis gas would not be available (e.g., during gasifier startups and outages), the gas turbine would use natural gas.

The combined-cycle facilities are not part of DOE's proposed action and would be built without DOE funding regardless of DOE's decision on providing cost-shared funding for the proposed project. While the proposed project consists of the gasifier, synthesis gas cleanup systems, and supporting infrastructure only, the EIS will address the construction and operation of the combined-cycle unit as a related action and include the combined facilities in the analyses of environmental impacts because the facilities are so intertwined.

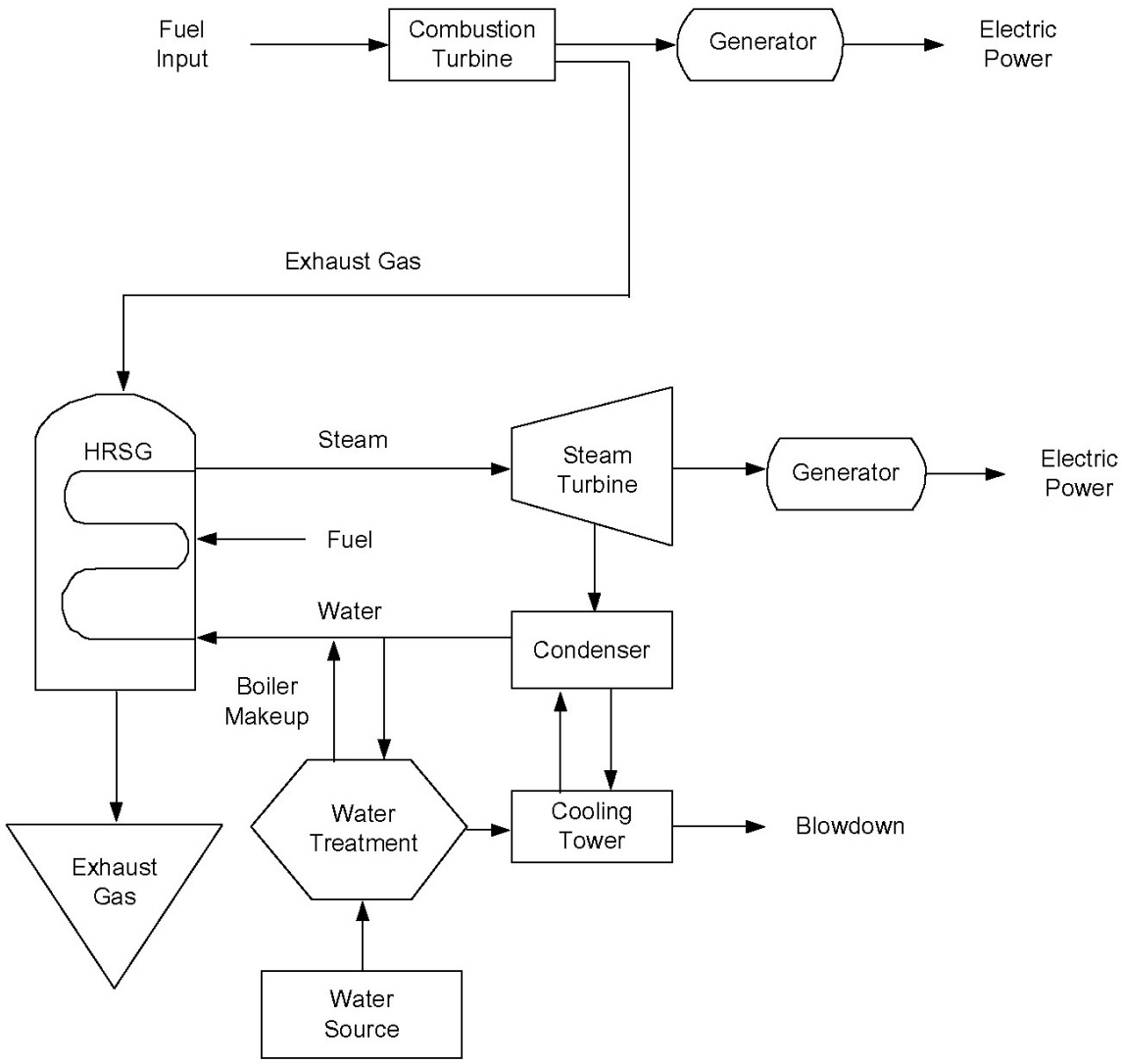


**Figure 2.2.1. Schematic of the combined-cycle system, including the gas combustion turbine, steam turbine, heat recovery steam generator (HRSG), and other key components.**

## 2.3 ALTERNATIVES

The goals of a federal action establish the limits of reasonable alternatives under the NEPA process. Congress established the CCPI Program with a specific goal— to accelerate commercial deployment of advanced coal-based technologies that can generate clean, reliable, and affordable electricity in the United States. DOE's purpose in considering the proposed action (to provide cost-shared funding) is to meet the goal of the program by demonstrating the viability of the proposed project (i.e., coal gasification, synthesis gas cleanup systems, and supporting infrastructure, which would be integrated with the related action's combined-cycle power-generating unit to form IGCC technology). Reasonable alternatives to the proposed action must be capable of meeting this purpose [however, CEQ NEPA regulation 40 CFR Part 1502.14(d) requires the alternatives analysis in the EIS to include the no-action alternative].

Congress directed DOE to pursue the goals of the legislation by providing partial funding for projects owned and controlled by non-federal-government participants. This statutory requirement places DOE in a much more limited role than if the federal government were the owner and operator of the project. In the latter situation, DOE would typically review a wide variety of reasonable alternatives to the proposed action. However, in dealing with a non-federal applicant, the scope of alternatives is necessarily more restricted, and DOE gives substantial weight to the needs of the proposer in establishing reasonable alternatives to the proposed action. Moreover, under the CCPI Program, DOE's role is limited to approving or disapproving the project as proposed by the participant.

Thus, the only alternative to the proposed action that has not been dismissed from further consideration is the no-action alternative (Section 2.3.1).

### 2.3.1 No-Action Alternative

Under the no-action alternative, DOE would not provide cost-shared funding for the design, construction, and demonstration of the proposed Orlando Gasification Project at OUC's Stanton Energy Center near Orlando, Florida. Without DOE participation, Southern Company and/or OUC could reasonably pursue at least one option. The combined-cycle facilities could be built at the Stanton Energy Center without the gasifier, synthesis gas cleanup systems, and supporting infrastructure.

The combined-cycle facilities would operate using natural gas as fuel without the availability of synthesis gas. Consequently, commercialization of the gasification facilities (alone or integrated with the combined-cycle facilities to form IGCC technology) would probably not occur because utilities and industries tend to use known and demonstrated technologies rather than unproven technologies. Employment associated with the combined-cycle facilities would be provided for construction workers and facility operators, but no employment would be provided associated with the proposed project. The associated construction-related traffic would also be reduced in terms of both duration

and total volume as compared to the proposed Orlando Gasification Project. Approximately the same amount of electricity would be produced from operation of the combined-cycle unit fired on natural gas. The 3,200-ft transmission line would still be constructed and installed to serve as an electrical interconnection to an existing onsite substation.

Atmospheric emissions would be less than those from the proposed project (based on air emissions displayed in Table 2.1.1 for the existing natural gas-fired combined-cycle Unit A). No gasification ash, elemental sulfur, or anhydrous ammonia would be produced. The Stanton Energy Center's existing units would continue to operate without change. This scenario would not contribute to the CCPI Program goal of accelerating commercial deployment of advanced coal-based technologies that can generate clean, reliable, and affordable electricity in the United States.

## 2.3.2 Alternatives Dismissed from Further Consideration

The following sections discuss alternatives that were initially identified and considered by DOE or the project participant. The project as proposed meets the needs outlined in the CCPI solicitation that was issued by DOE in February 2004 (Section 1.2). Factors considered in DOE's project selection process included the desirability of projects that collectively represent a diversity of technologies, utilize a broad range of U.S. coals, and represent a broad geographical cross-section of the United States. Otherwise, DOE did not constrain the proposals with regard to site or technology.

The proposals included responses to a DOE environmental questionnaire (Section 1.5). The responses contained discussions of the site-specific environmental, health, safety, and socioeconomic issues associated with each project. Based on the evaluation criteria discussed in Section 1.2, including consideration of environmental implications, DOE selected 4 projects, including the proposed project, for possible cost-shared financial assistance.

Because DOE's role would be limited to providing cost-shared funding for the selected project, DOE is limited to either accepting or rejecting the project as proposed by the participant, including the proposed technology and site. As such, reasonable alternatives to the proposed project are narrowed and the following alternatives have been dismissed from further consideration.

### 2.3.2.1 Alternative Site

No other sites to host the proposed project were given detailed consideration or evaluation by Southern Company team members during their site selection process. During the preparation of previous proposals for similar efforts to commercialize the gasification technology, Southern Company initially considered other sites, including undeveloped sites and co-location with existing power plants in Alabama, New Mexico, Florida, North Dakota, and Pennsylvania. However, because the Stanton Energy Center is an existing site at which the private partners have already established a business relationship, the Stanton Energy Center was the only location identified in their proposal responding to DOE's second-round CCPI solicitation. The site closely meets the proposed project's technical needs, and the project would easily integrate with existing infrastructure (e.g., roads, rail

loop, electrical transmission lines). The site avoids the additional cost associated with construction of facilities and infrastructure at an undeveloped site. The environmental impacts likely would be much greater at a site without existing infrastructure than at the Stanton Energy Center. Based on the above considerations, other sites are not reasonable alternatives and are not evaluated in this EIS.

#### 2.3.2.2 Alternative Configuration

Under this alternative, the proposed Orlando Gasification Project would be integrated with the existing Stanton A combined-cycle unit, which would require retrofitting Stanton A to combust synthesis gas. Under this scenario, the planned new combined-cycle unit would still be built, but probably would operate as a natural gas-fired unit. The same gasifier and support facilities would be constructed in nearly the same location, with independent construction of the same planned combined-cycle unit in essentially the same location on essentially the same schedule. After construction, the Stanton Energy Center would host one natural gas-fired combined-cycle unit and one IGCC facility under both the preferred alternative and the alternative configuration scenario. Thus, the alternative configuration would result in impacts essentially indistinguishable from the preferred alternative (with the possible exception of slightly additional impacts associated with retrofitting Unit A). Southern Company ultimately rejected this alternative because integration of the proposed Orlando Gasification Project with the new combined-cycle unit would avoid retrofitting issues and would promote design efficiencies. Therefore, DOE has determined that this is not a reasonable alternative.

#### 2.3.2.3 Alternative Size

Demonstration of the proposed project using a smaller-size plant has been dismissed as not reasonable. The design size for the proposed project was selected because it is sufficiently large to show potential customers that the gasification technology, once demonstrated at this scale, could be applied commercially without further scale-up. A demonstration indicating that the performance and cost targets are achievable at this scale would convince potential customers that the gasification technology is not only feasible but economically attractive (Section 1.4). A smaller-sized plant would not be sufficiently large to demonstrate the commercial viability of the technology, nor would a smaller-sized plant meet OUC’s projected need for power.

#### 2.3.2.4 Alternative Technologies

Other technologies have been dismissed as not reasonable. The proposed project was selected to demonstrate coal gasification, synthesis gas cleanup systems, and supporting infrastructure, which would be integrated with the related action’s combined-cycle power-generating unit to form IGCC technology. Other CCPI projects were selected to demonstrate other coal-based technologies. The projects selected for demonstration under the CCPI Program are not considered alternatives to each other.

The use of other technologies and approaches that are not applicable to coal (e.g., natural gas, wind power, solar energy, and conservation) would not contribute to the CCPI Program goal of accelerating commercial deployment of advanced coal-based technologies that can generate clean, reliable, and affordable electricity in the United States. Furthermore, DOE has no authority to spend funds on alternative technologies that have been appropriated by Congress for the CCPI Program. However, DOE continues to allocate more funding for energy efficiency and renewable energy than for any other energy activity (i.e., a budget request of $1.2 billion in Fiscal Year 2006).[1] DOE distributes this financial support to demonstrate alternative technologies, such as solar energy, through other comprehensive programs. DOE's Solar Energy Technologies Program sponsors efforts to research, develop, and deploy cost-effective technologies toward increasing the use of solar energy. For example, under the Million Solar Roofs Initiative, which began in 1997, solar energy systems are being installed on homes with the goal of one million home installations by 2010.

[1] Fiscal Year 2006 Budget in Brief at http://www.eere.energy.gov