APPENDIX D

MVID West Fish Screen Designs

1678-155-2

2

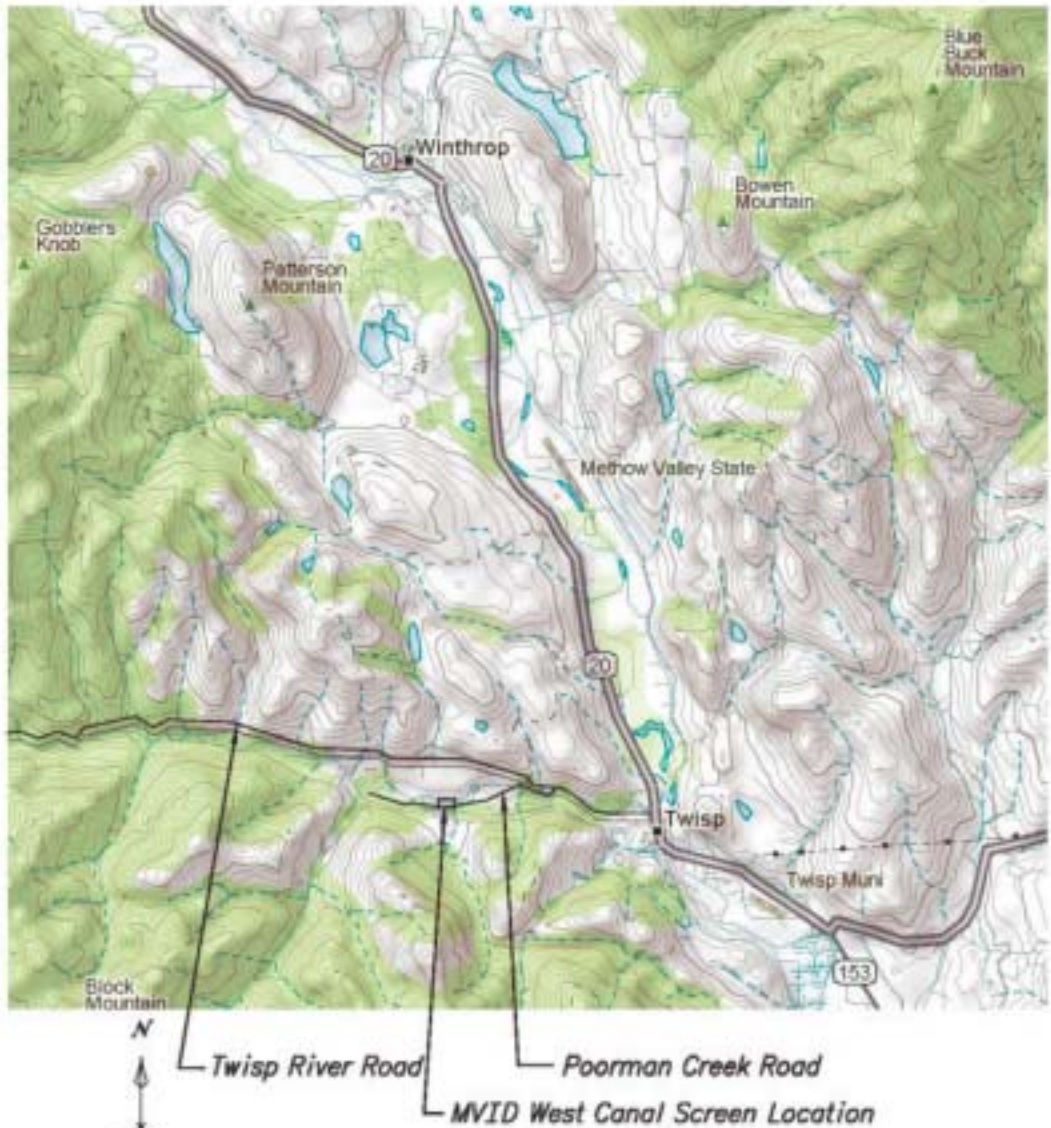

APPROX. SCALE OF MILES

ALWAYS THINK SAFETY

COLUMBIA/SNAKE RIVER SALMON RECOVERY PROGRAM – WASHINGTON
FISH PASSAGE AND PROTECTION FACILITIES

METHOW VALLEY IRRIGATION DISTRICT
WEST FISH SCREEN STRUCTURE
LOCATION MAP

1678-155-2

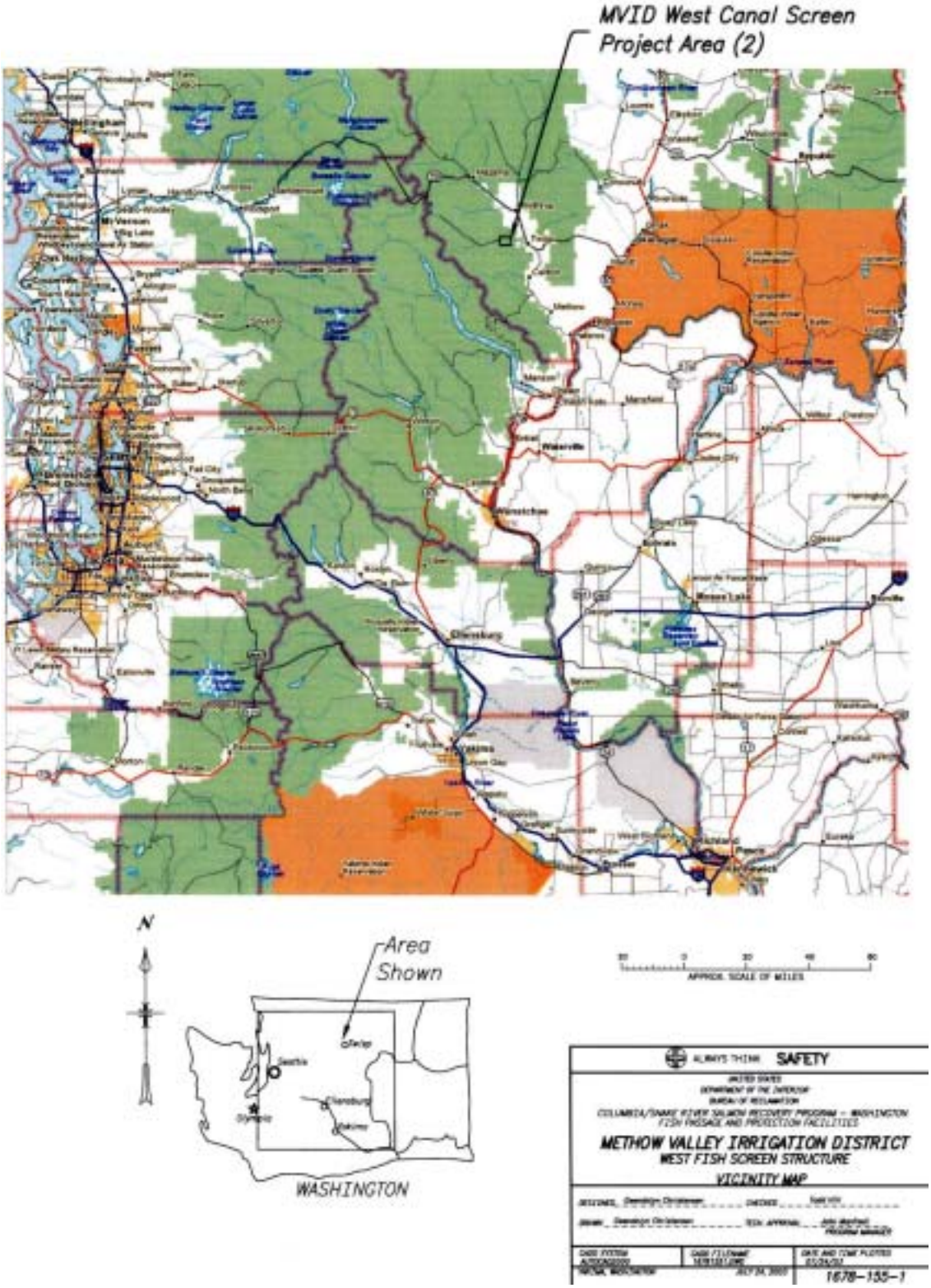
MVID West Canal Screen
Project Area (2)
Area
Shown
WASHINGTON
APPROX. SCALE OF MILES
ALWAYS THINK SAFETY
METHOW VALLEY IRRIGATION DISTRICT
WEST FISH SCREEN STRUCTURE
VICINITY MAP
1678-155-1

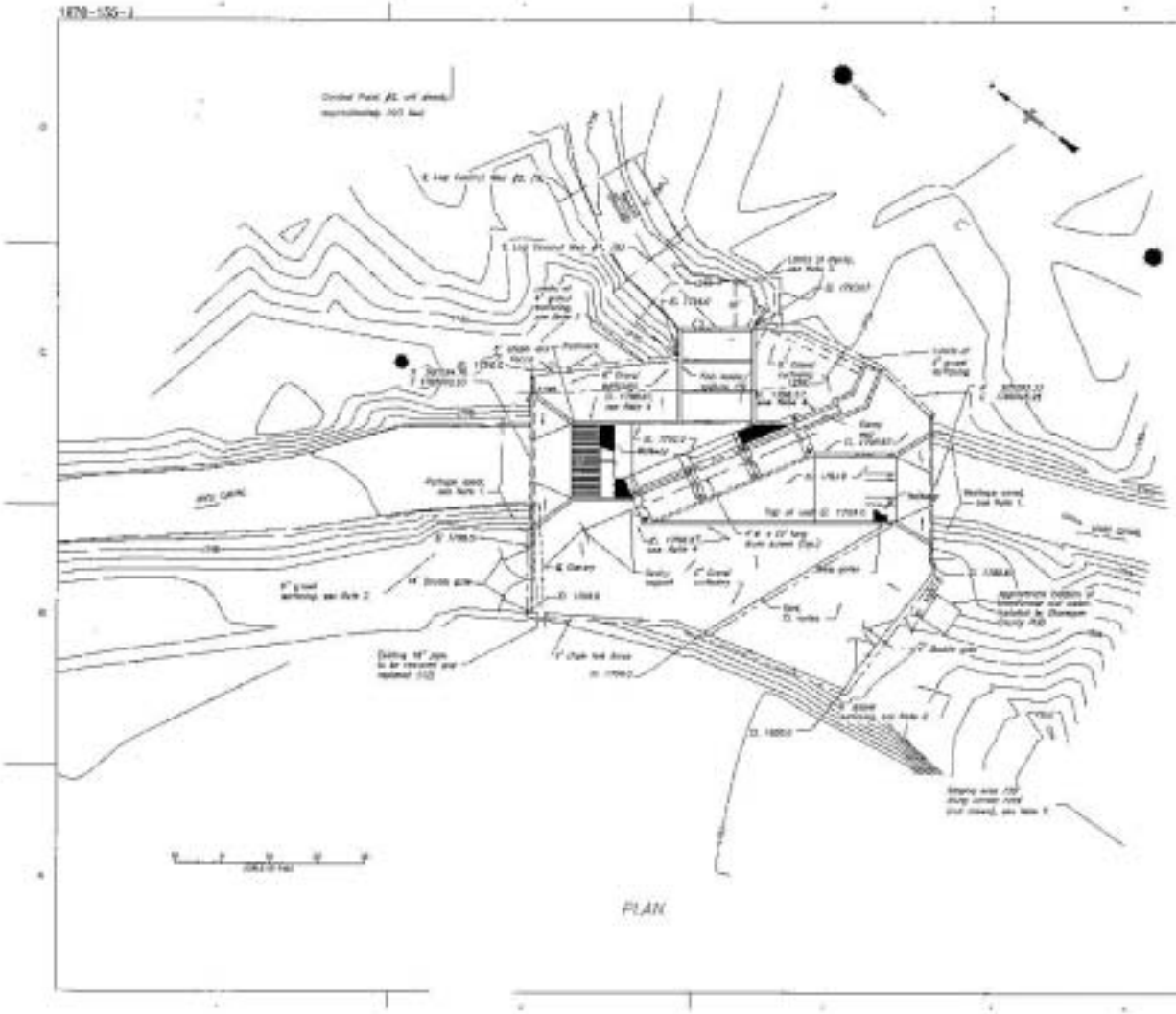

NOTES:

SURVEY CONTROL:

LEGEND:

METHOW VALLEY IRRIGATION DISTRICT

SITE PLAN

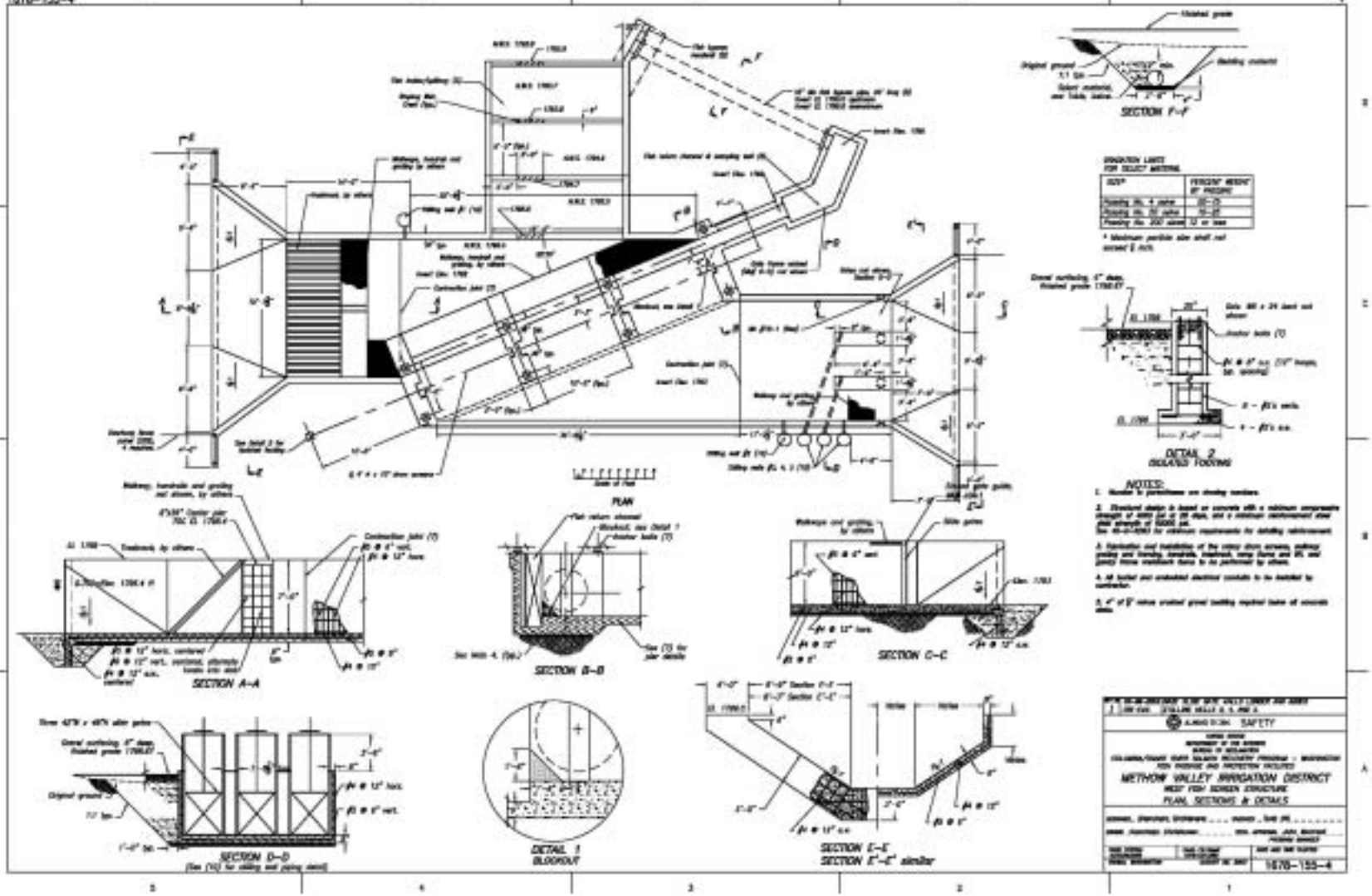
1676-155-4
SECTION F-F
DETAIL 2
ISOLATED FOOTING
NOTES:
PLAN
SECTION A-A
SECTION B-B
SECTION C-C
SECTION D-D
DETAIL 1
BLOCKOUT
SECTION E-E
SECTION E'-E' similar
SAFETY
METHOW VALLEY IRRIGATION DISTRICT
WEST FORK SCREEN STRUCTURE
PLAN, SECTIONS & DETAILS
1676-155-4

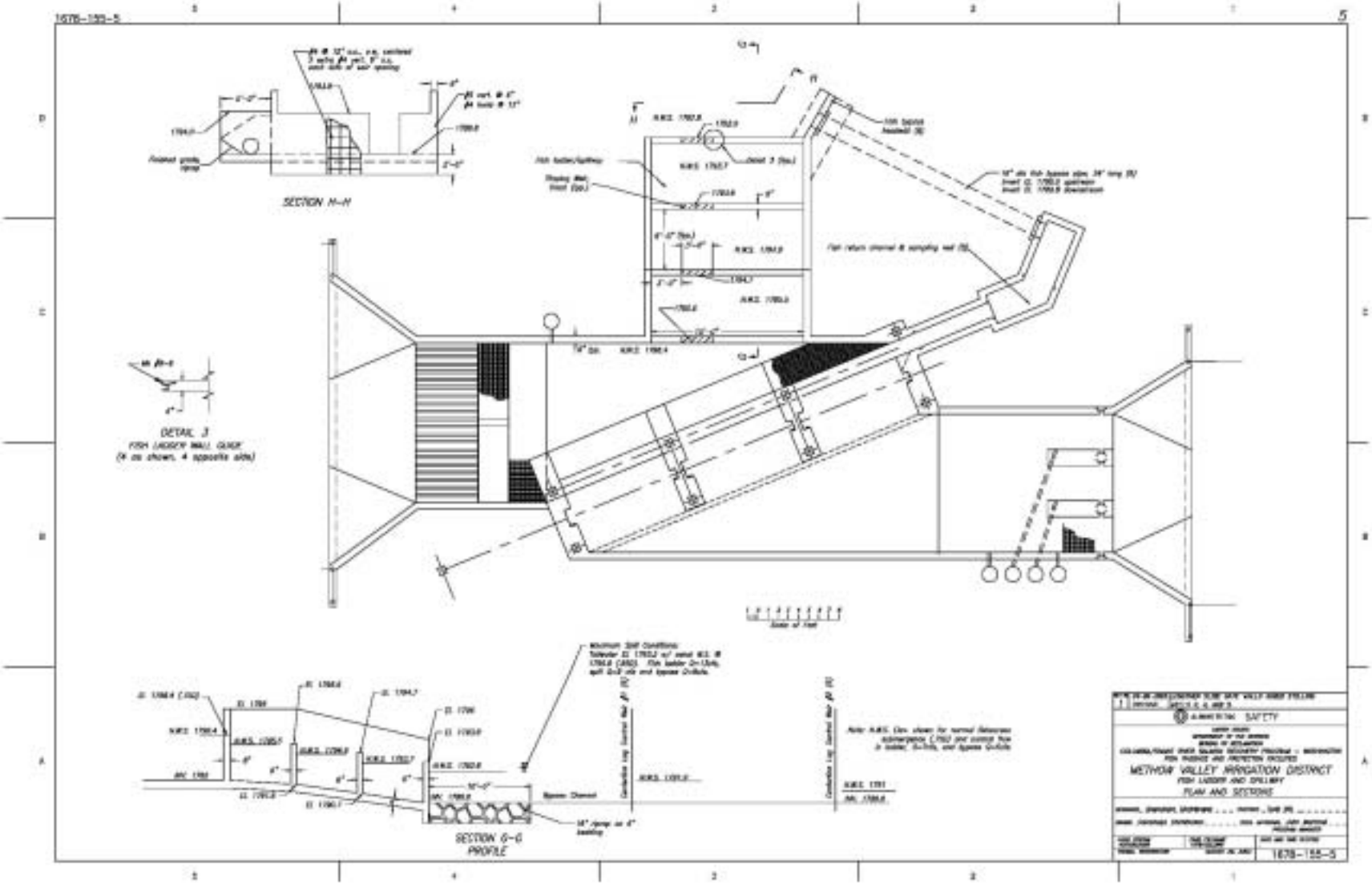
1676-155-5
SECTION H-H
DETAIL 3
SECTION G-G
PROFILE
SAFETY
METHOW VALLEY IRRIGATION DISTRICT
FISH LADDER AND SPILLWAY
PLAN AND SECTIONS
1676-155-5

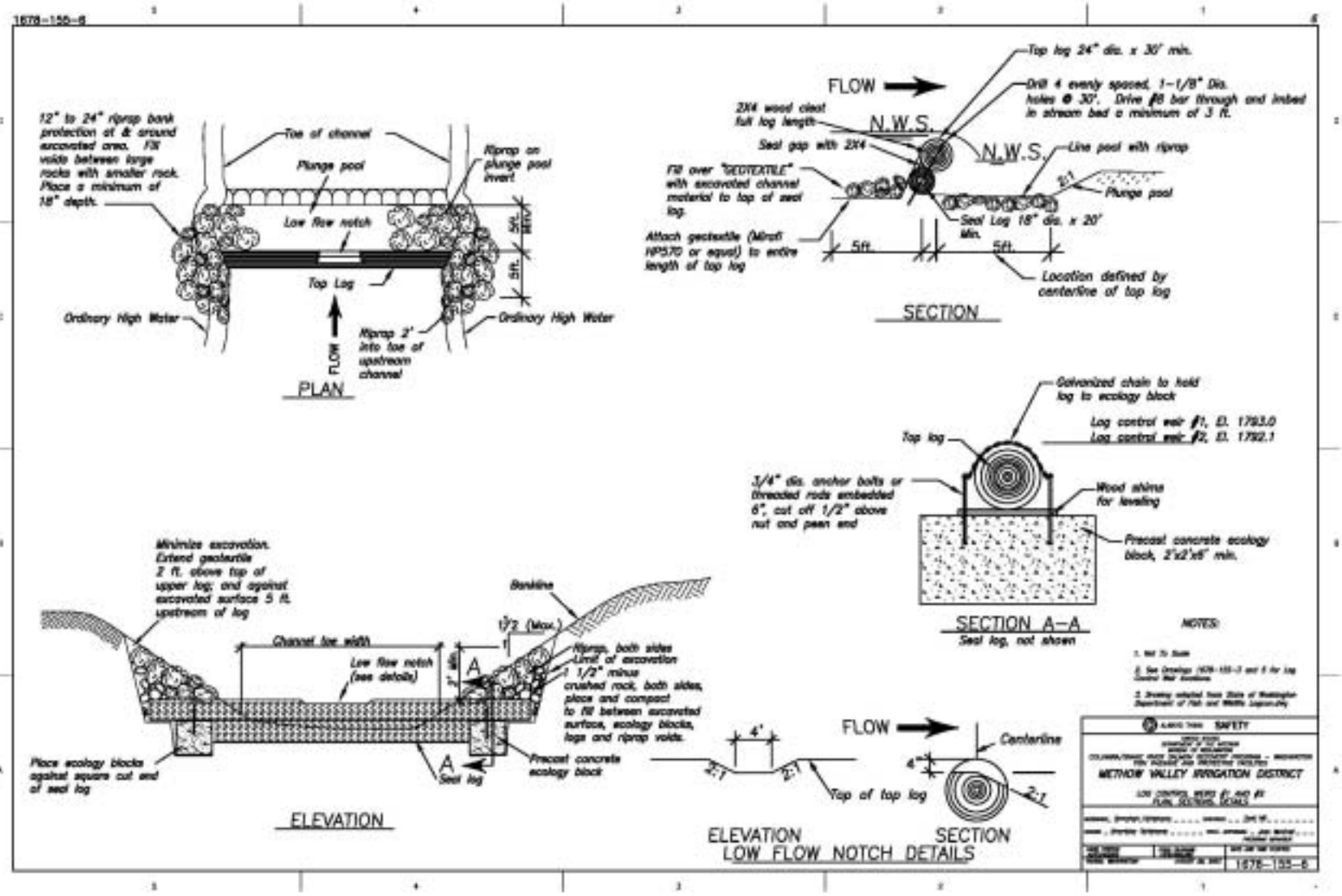
1678-155-6
12" to 24" riprap bank protection at & around excavated area. Fill voids between large rocks with smaller rock. Place a minimum of 18" depth.
Toe of channel
Plunge pool
Riprap on plunge pool invert
Low flow notch
Top Log
5ft. Min.
5ft.
Ordinary High Water
Riprap 2' into toe of upstream channel
FLOW
PLAN
FLOW
Top log 24" dia. x 30' min.
Drill 4 evenly spaced, 1-1/8" Dia. holes @ 30'. Drive #8 bar through and imbed in stream bed a minimum of 3 ft.
2X4 wood cleat full log length
N.W.S.
Seal gap with 2X4
N.W.S.
Line pool with riprap
Fill over "GEOTEXTILE" with excavated channel material to top of seal log.
2:1
Plunge pool
Seal Log 18" dia. x 20' Min.
Attach geotextile (Mirafi HP570 or equal) to entire length of top log
5ft.
5ft.
Location defined by centerline of top log
SECTION
Galvanized chain to hold log to ecology block
Log control weir #1, El. 1793.0
Log control weir #2, El. 1792.1
Top log
3/4" dia. anchor bolts or threaded rods embedded 6", cut off 1/2" above nut and peen end
Wood shims for leveling
Precast concrete ecology block, 2'x2'x6' min.
SECTION A-A
Seal log, not shown
NOTES:
Minimize excavation. Extend geotextile 2 ft. above top of upper log; and against excavated surface 5 ft. upstream of log
Bankline
1 1/2 (Max.)
1
Channel toe width
Low flow notch (see details)
A
Riprap, both sides
Limit of excavation
1 1/2" minus crushed rock, both sides, place and compact to fill between excavated surface, ecology blocks, logs and riprap voids.
Place ecology blocks against square cut end of seal log
A
Seal log
Precast concrete ecology block
ELEVATION
4'
2:1
2:1
FLOW
Centerline
4"
2:1
Top of top log
ELEVATION
SECTION
LOW FLOW NOTCH DETAILS
SAFETY
METHOW VALLEY IRRIGATION DISTRICT
1678-155-6

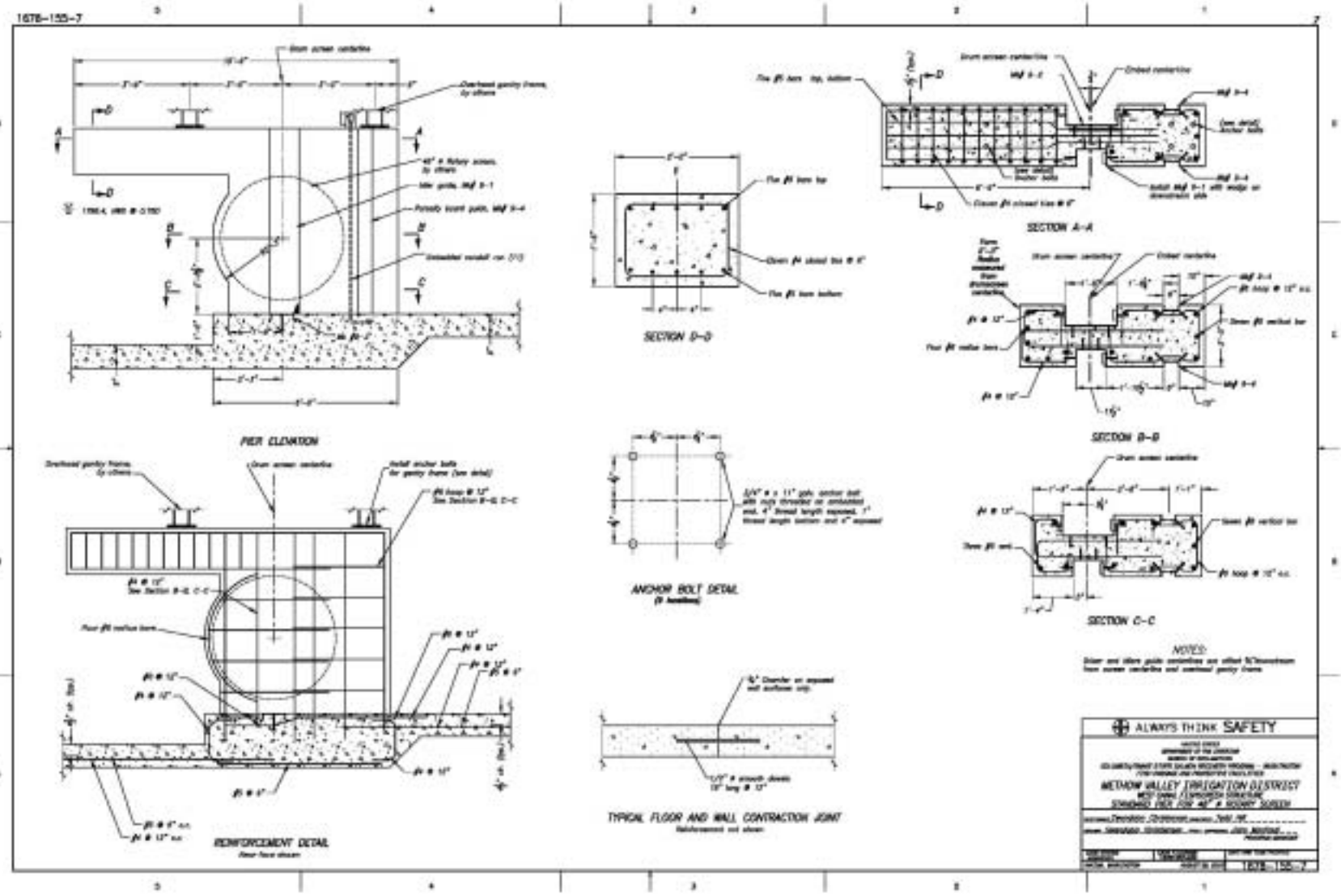
1678-155-7
PIER ELEVATION
SECTION D-D
SECTION A-A
SECTION B-B
SECTION C-C
ANCHOR BOLT DETAIL
REINFORCEMENT DETAIL
TYPICAL FLOOR AND WALL CONTRACTION JOINT
NOTES:
ALWAYS THINK SAFETY
METHOW VALLEY IRRIGATION DISTRICT
1678-155-7

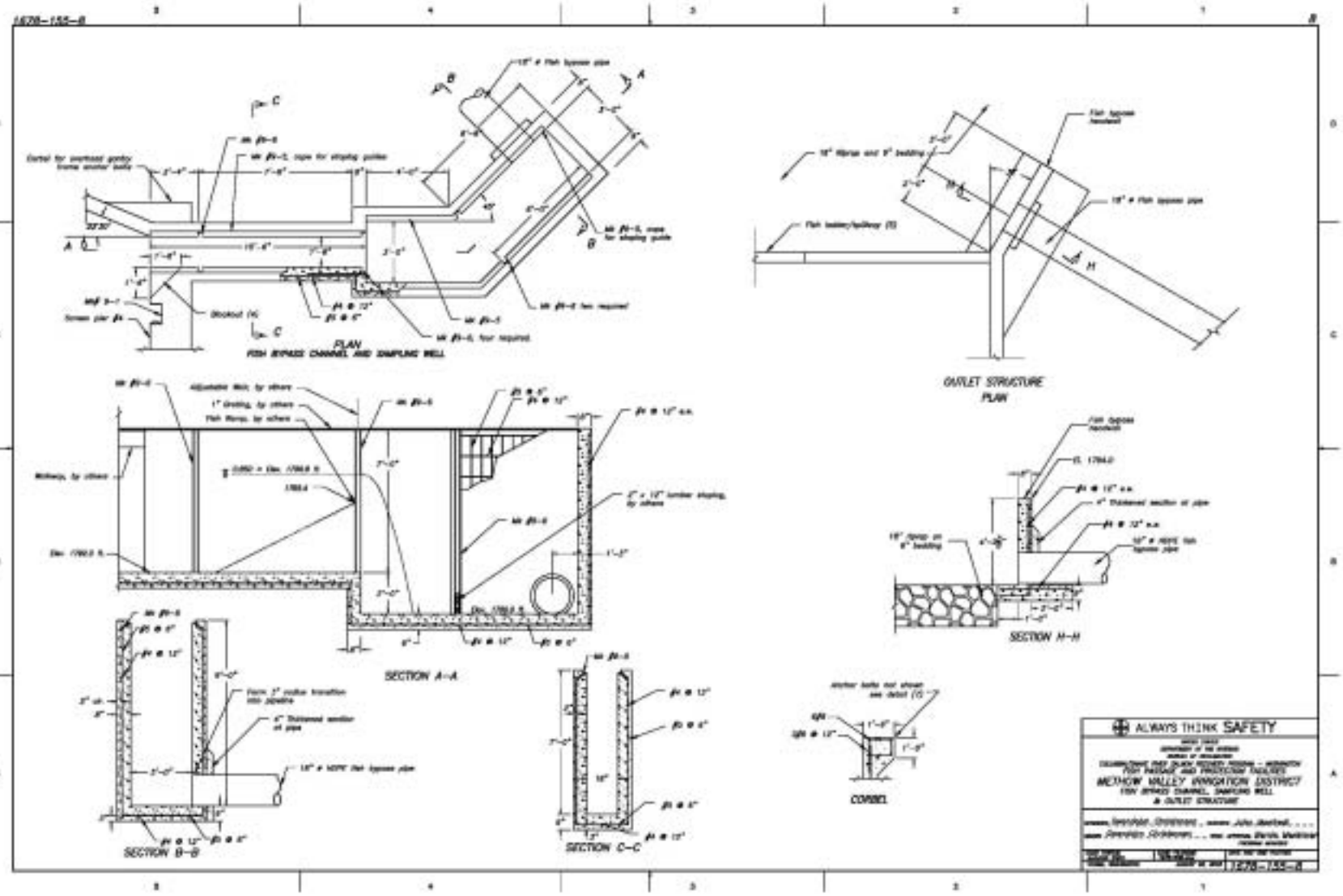
1678-155-8
PLAN
FISH BYPASS CHANNEL AND SAMPLING WELL
OUTLET STRUCTURE
PLAN
SECTION A-A
SECTION B-B
SECTION C-C
SECTION H-H
CORBEL
ALWAYS THINK SAFETY
METHOW VALLEY IRRIGATION DISTRICT
FISH BYPASS CHANNEL, SAMPLING WELL
& OUTLET STRUCTURE
1678-155-8

1678-155-9

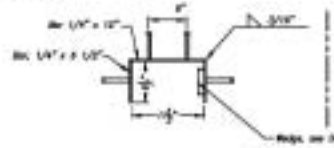

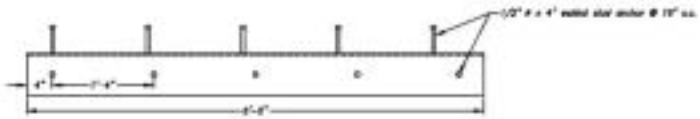

MKJ 9-1, SLIDE GUIDE, three required

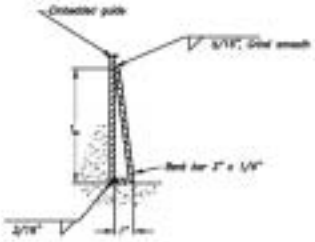

Detail 1

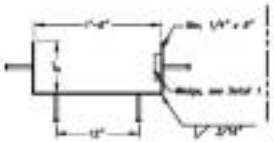

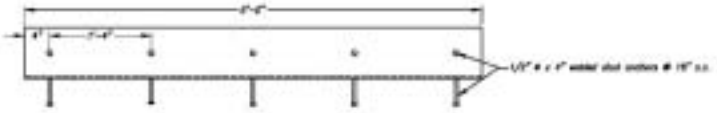

MKJ 9-2, DRIVER GUIDE, three required

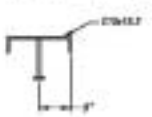

MKJ 9-3, SILL PLATE, three required

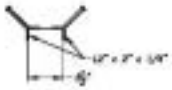

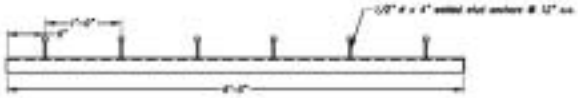

MKJ 9-4, POROSITY BOARD GUIDES, six pairs required

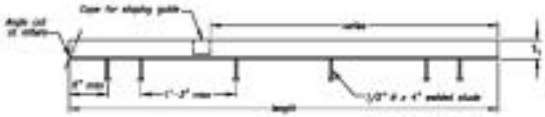

PLAN VIEW, MKJ 9-5, EMBEDDED GRATING FRAME, four required
Per as shown, See opposite

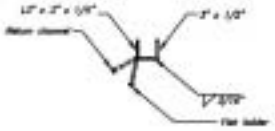

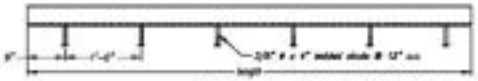

MKJ 9-6, EMBEDDED STOPLOG GUIDE, fourteen required

1. Hot dip galvanized after fabrication

ALWAYS THINK SAFETY

METHOW VALLEY IRRIGATION DISTRICT

MISCELLANEOUS EMBEDED METAL WORK

1678-155-9

1628-155-10

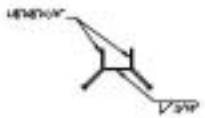

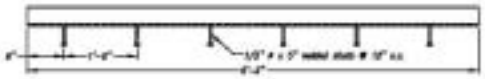

WSF 10-1, SLIDE GATE GUIDE, six required

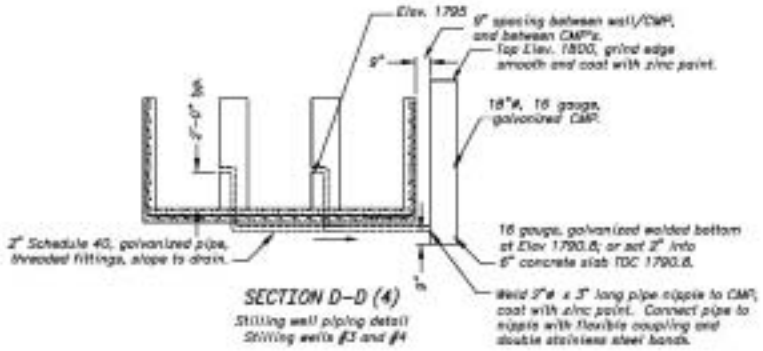

SECTION D–D (4)

Stilling well piping detail
Stilling wells #3 and #4

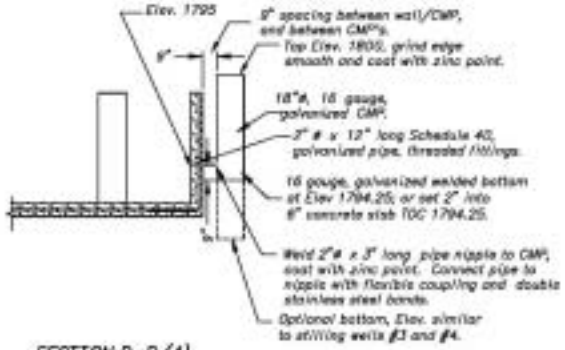

SECTION D–D (4)

Stilling well piping detail
Stilling wells #2, and #5, #1 is similar

1. hot dip galvanized after fabrication

1	12-8-2017	[illegible]

ALWAYS THINK SAFETY

[illegible]

METHOW VALLEY IRRIGATION DISTRICT
WEST FIRST AVE. PUMPHOUSE AND WORK
AND STILLING WELL PIPING DETAIL

Designed: [illegible] Date: [illegible]
Drawn: [illegible] Checked: [illegible] Approved: [illegible]

[illegible]	[illegible]	[illegible]
[illegible]	[illegible]	1628-155-10

1678-155-11

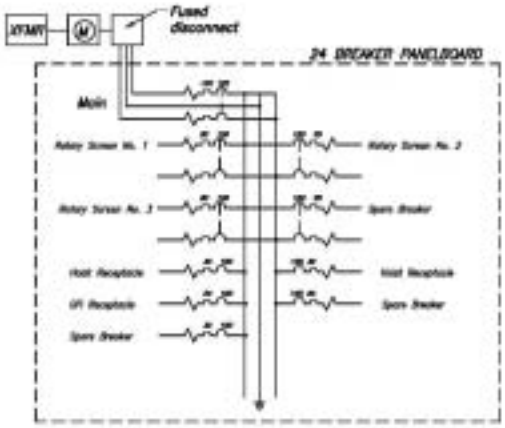

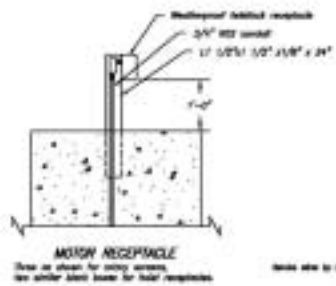

MOTOR RECEPTACLE

Three as shown for rotary screens, two similar blank boxes for hoist receptacles.

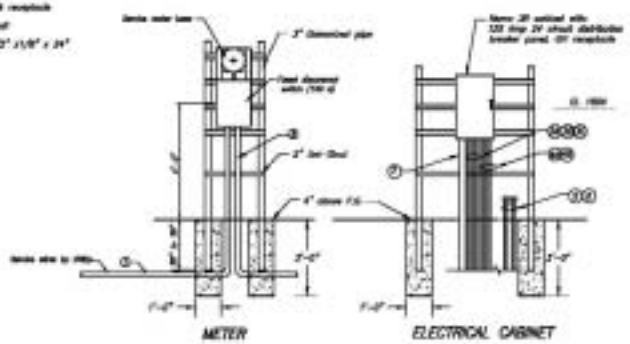

METER

ELECTRICAL CABINET

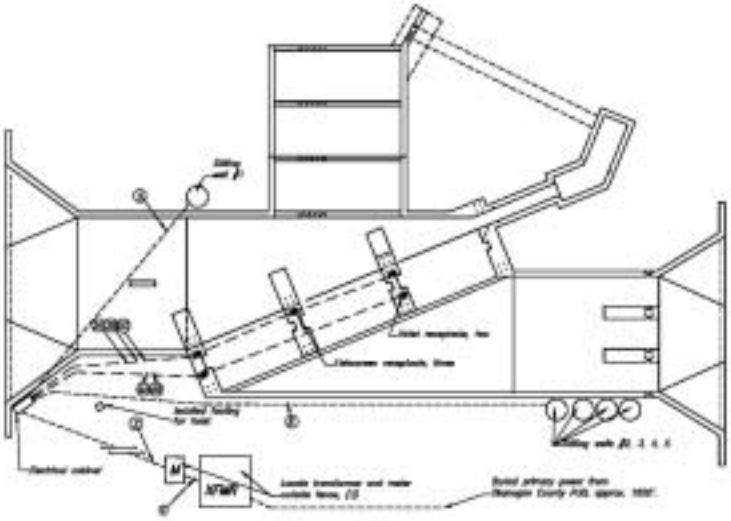

CONDUIT PLAN

CONDUIT & CABLE SCHEDULE

Conduit No.	Cable	Conduit Size	From	To	Remarks
1	By Utility		Service XFMR	[illegible]	Coordinate w/ Okanogan County PUD
2	4-1C No. 8	2"	Meter/Fused Disconnect	Breaker Panel	Buried
3A, 3B, 3C	4-1C No. 12	Three - 3/4"	Breaker Panel	Fish Screen Motor Receptacles	Buried/Embedded conduits
4A, 4B	3-1C No. 16	Two - 3/4"	Breaker Panel	Hoist Receptacles	Buried/Embedded conduits
5	Future	3/4"	Breaker Panel	Stilling Well #1	Buried, cap ends @ EC 1788.3/88
6	Future	1 1/2"	Breaker Panel	Stilling Well #2	Buried, cap ends @ EC 1788.3/88

See 104-D-737 for symbols

1	[illegible]

SAFETY

METHOW VALLEY IRRIGATION DISTRICT

ELECTRICAL INSTALLATION

METER DISTRIBUTION PANEL, RECEPTACLES AND CONDUIT

1678-155-11

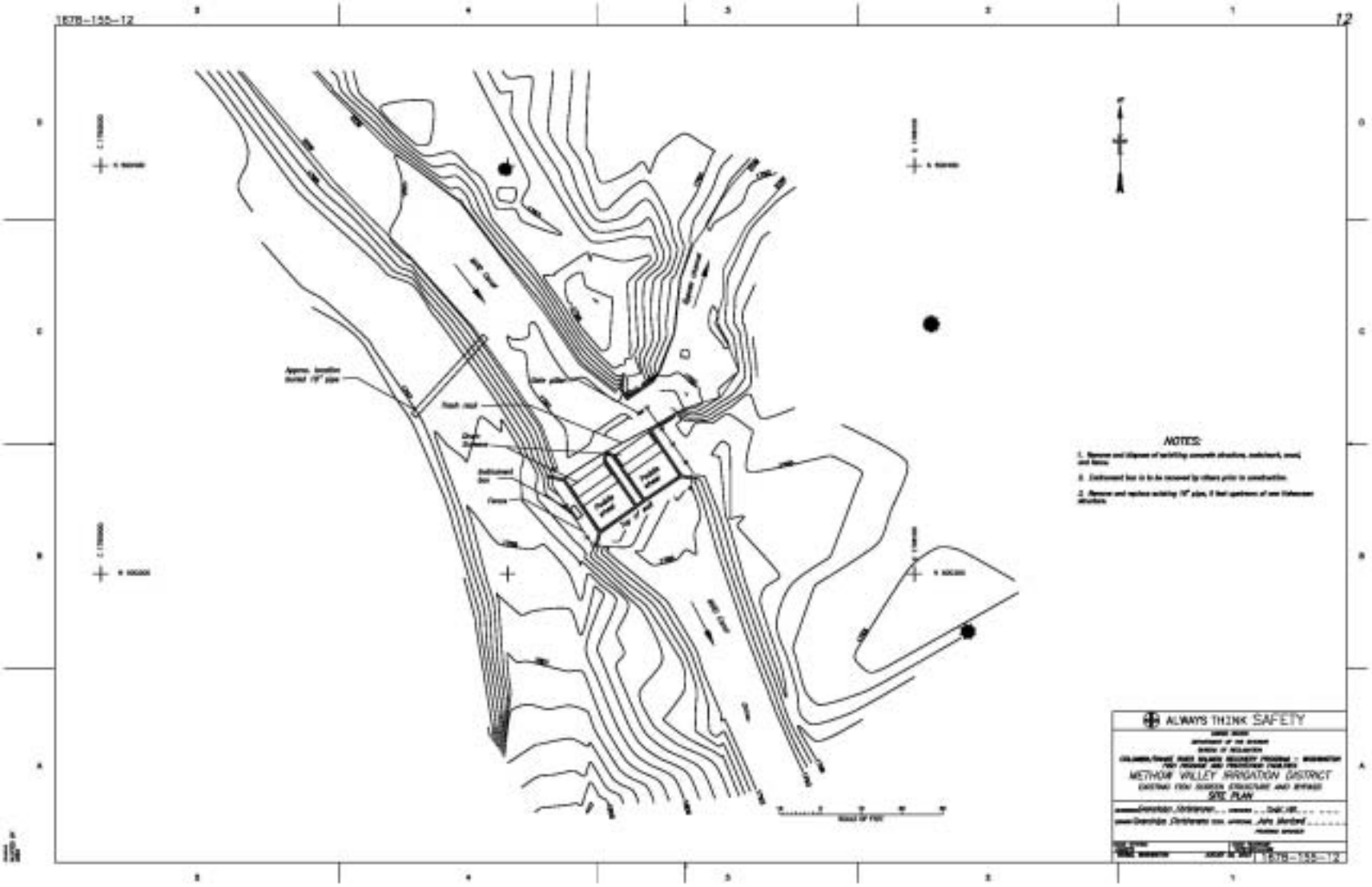
1678-155-12
12
NOTES:
ALWAYS THINK SAFETY
METHOW VALLEY IRRIGATION DISTRICT
SITE PLAN
1678-155-12

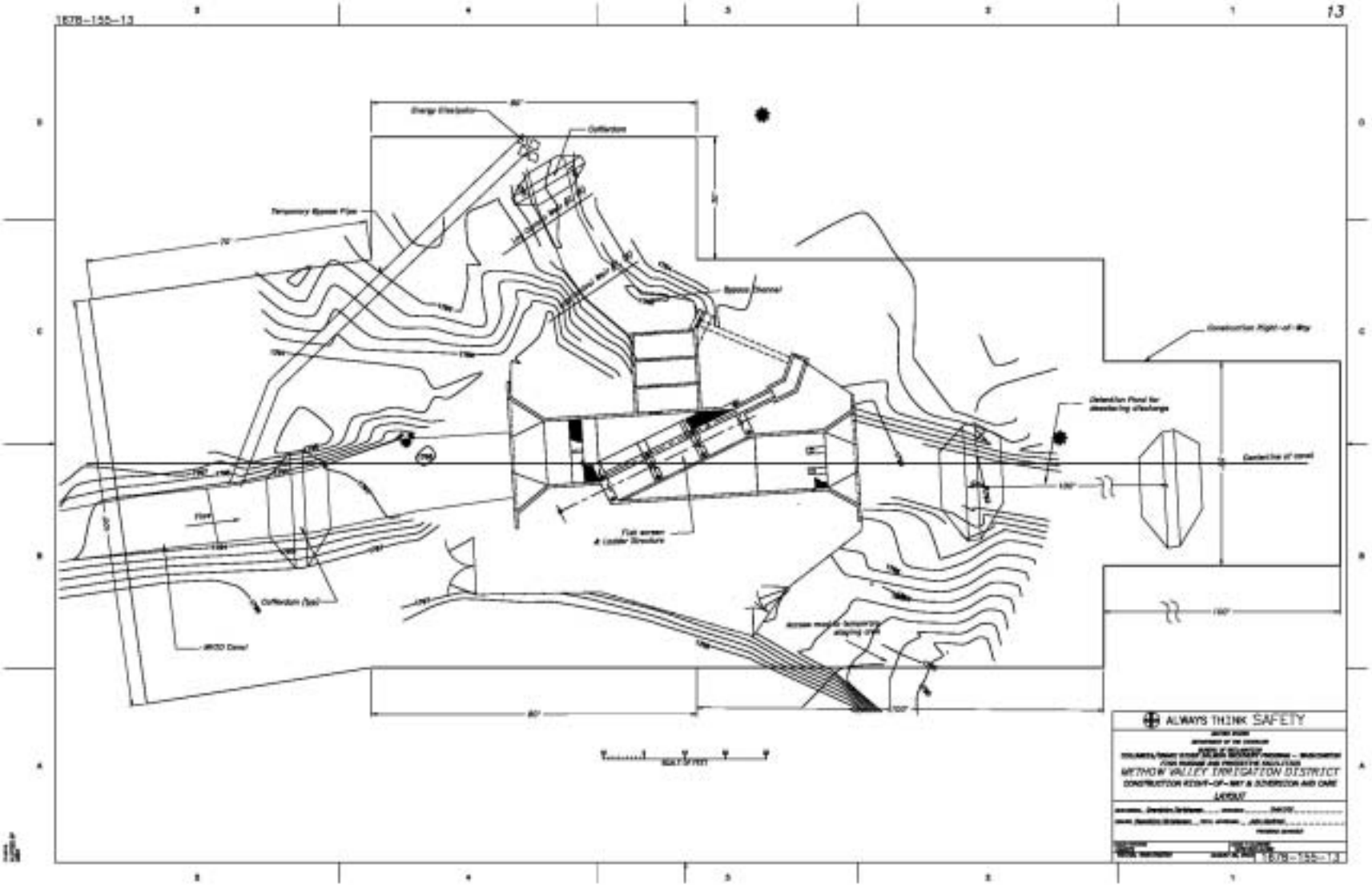
1678-155-13
13
Energy Dissipator
Cofferdam
Temporary Bypass Pipe
Bypass Channel
Construction Right-of-Way
Detention Pond for dewatering discharge
Centerline of canal
Flow
Fish screen & Ladder Structure
Cofferdam (typ)
WRID Canal
ALWAYS THINK SAFETY
METHOW VALLEY IRRIGATION DISTRICT
CONSTRUCTION RIGHT-OF-WAY & DIVERSION AND CARE
LAYOUT
1678-155-13

40-D-6263

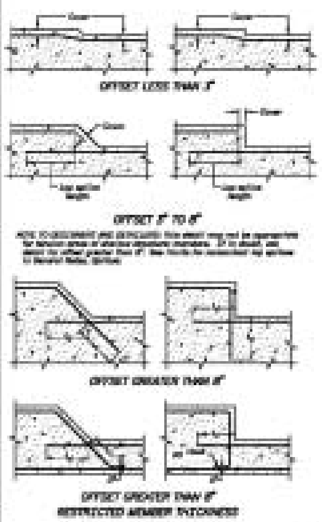

OFFSET LESS THAN 3"

OFFSET 3" TO 8"

NOTE TO DESIGNERS AND DETAILERS: [illegible]

OFFSET GREATER THAN 8"

OFFSET GREATER THAN 8" RESTRICTED MEMBER THICKNESS

TYPICAL OFFSET DETAILS

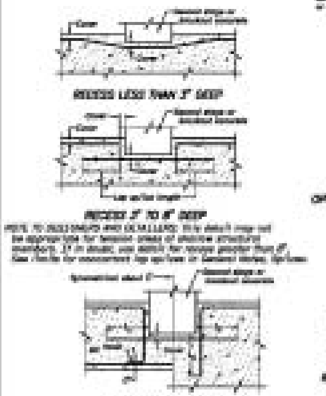

RECESS LESS THAN 3" DEEP

RECESS 3" TO 8" DEEP

NOTE TO DESIGNERS AND DETAILERS: [illegible]

RECESS GREATER THAN 8"

TYPICAL BLOCKOUT RECESS DETAILS

(Second stage concrete shown)

RESTRICTED MEMBER THICKNESS

FILLET 1'-0" OR GREATER

FILLET LESS THAN 1'-0"

TYPICAL CORNER DETAILS

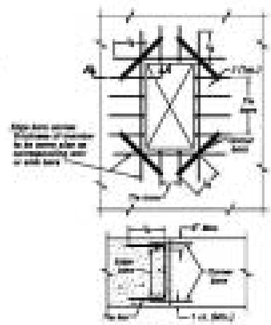

SECTION A-A

OPENINGS:

TABLE FOR ADDITIONAL REINFORCEMENT

MEMBER THICKNESS	TIE BARS	EDGE BARS	CORNER BARS
[illegible]	[illegible]	[illegible]	[illegible]
[illegible]	[illegible]	[illegible]	[illegible]
[illegible]	[illegible]	[illegible]	[illegible]
[illegible]	[illegible]	[illegible]	[illegible]

[illegible]

RECESSES:

[illegible]

ADDITIONAL REINFORCEMENT AROUND OPENINGS AND RECESSES

GENERAL NOTES 1/

UNLESS OTHERWISE SHOWN ON THE REINFORCEMENT DESIGN DRAWINGS, THE DETAILS AND NOTES SHOWN ARE MINIMUM REQUIREMENTS AND TYPICAL FOR ALL REINFORCEMENT DRAWINGS THAT REFER TO THIS DRAWING

ABBREVIATIONS:

[illegible]

SYMBOLS:

[illegible]

DIMENSIONS:

[illegible]

COVER:

[illegible]

PLACING:

[illegible]

SPACING:

[illegible]

STANDARD HOOKS:

[illegible]

STIRRUP AND TIE HOOKS:

[illegible]

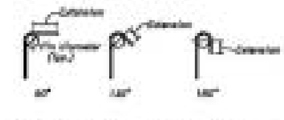

TABLE OF PIN DIAMETERS IN INCHES

BAR NO.	3	4	5	6	7	8	9	10	11
Standard bends	2 1/4	3	3 3/4	4 1/2	5 1/4	6	9 1/2	10 3/4	12
Stirrup and tie bends	1 1/2	2	2 1/2	4 1/2	5 1/4	6			

REINFORCEMENT DOWELS:

[illegible]

PLAIN DOWELS:

[illegible]

ACCESSORIES:

[illegible]

DRAWING REFERENCES:

[illegible]

CODE AND DETAILING REFERENCES:

[illegible]

NOTES TO DESIGNERS AND DETAILERS:

[illegible]

SPLICES:

[illegible]

f'c = 3000 psi TABLE 3 - 60 fy = 60,000 psi

BAR SIZE NO.	MINIMUM BAR SPACING (INCHES)	LENGTH OF LAPPED SPLICES (INCHES) TOP BARS *	OTHER BARS	DEVELOPMENT LENGTH l_d (INCHES) TOP BARS *	OTHER BARS
3	[illegible]	[illegible]	[illegible]	[illegible]	[illegible]
4	[illegible]	[illegible]	[illegible]	[illegible]	[illegible]
5	[illegible]	[illegible]	[illegible]	[illegible]	[illegible]
6	[illegible]	[illegible]	[illegible]	[illegible]	[illegible]
7	[illegible]	[illegible]	[illegible]	[illegible]	[illegible]
8	[illegible]	[illegible]	[illegible]	[illegible]	[illegible]
9	[illegible]	[illegible]	[illegible]	[illegible]	[illegible]
10	[illegible]	[illegible]	[illegible]	[illegible]	[illegible]
11	[illegible]	[illegible]	[illegible]	[illegible]	[illegible]
9	[illegible]	[illegible] **	[illegible] **	[illegible]	[illegible]
10	[illegible]	[illegible] **	[illegible] **	[illegible]	[illegible]
11	[illegible]	[illegible] **	[illegible] **	[illegible]	[illegible]

f'c = 4000 psi TABLE 4 - 60 fy = 60,000 psi

BAR SIZE NO.	MINIMUM BAR SPACING (INCHES)	LENGTH OF LAPPED SPLICES (INCHES) TOP BARS *	OTHER BARS	DEVELOPMENT LENGTH l_d (INCHES) TOP BARS *	OTHER BARS
3	[illegible]	[illegible]	[illegible]	[illegible]	[illegible]
4	[illegible]	[illegible]	[illegible]	[illegible]	[illegible]
5	[illegible]	[illegible]	[illegible]	[illegible]	[illegible]
6	[illegible]	[illegible]	[illegible]	[illegible]	[illegible]
7	[illegible]	[illegible]	[illegible]	[illegible]	[illegible]
8	[illegible]	[illegible]	[illegible]	[illegible]	[illegible]
9	[illegible]	[illegible]	[illegible]	[illegible]	[illegible]
10	[illegible]	[illegible]	[illegible]	[illegible]	[illegible]
11	[illegible]	[illegible]	[illegible]	[illegible]	[illegible]
9	[illegible]	[illegible] **	[illegible] **	[illegible]	[illegible]
10	[illegible]	[illegible] **	[illegible] **	[illegible]	[illegible]
11	[illegible]	[illegible] **	[illegible] **	[illegible]	[illegible]

* Top bars are all horizontal bars so placed that more than 12 inches of fresh concrete is cast below the development length or splice.

** Splices must be staggered.

1/ Unless otherwise shown on the reinforcement design drawings or this drawing, follow the recommendations established by the ACI Detailing manual - 1994.

[illegible]

SAFETY

GENERAL NOTES AND MINIMUM REQUIREMENTS FOR DETAILING REINFORCEMENT

[illegible]

40-D-6263

104-D-757

15

MISCELLANEOUS DESIGNATIONS

ALT	Alternator
A	Suffix designation for auxiliary control circuit
ASC	Adjustable speed controller
BFV	Butterfly valve
C or CAP	Capacitor
CB	Circuit breaker
C.L.F	Current limiting fuse
CNT	Counter
DV	Discharge valve
EXC	Exciter
F(s)	Fuse
GFCI	Ground fault circuit interrupter
GRD	Ground
GRS	Galvanized rigid steel conduit
GV	Gate or guard valve
HR	Hand reset (Use as suffix)
I	Input
IL	Indicating lamp, add prefix for color
LMC	Liquidtite steel conduit
MCC	Motor control equipment (2000 – 5000 volts)
M	Motor
MCC	Motor control center (600 – volts and less)
NP	Nameplate
NC	Normally closed
NO	Normally opened
NSPD	Nonsegregated phase bus
O	Output
PB	Pushbutton (Momentary contact type)
PBM	Pushbutton (Maintaining contact type)
PC	Programmable controller
PR	Probe operated relay (Refer to 15 for suffix)
REC	Rectifier
R/T	Resistance to current transducer
SF	Service factor
SS	Solenoid valve
SV	Solenoid operated valve
TD	Time delay on energization
TT	Thermal switch
V/I	Voltage to current transducer
VLV	Valve
WC	Water level contact on telemeter receiver (Refer to 15 for suffix)
WRM	Wound rotor motor
X,Y,Z	Suffix for auxiliary relay, switch, or contactor (MUX,CSM,PLR, ect.)
-1, -2, -3, etc.	Suffix for unit number for pumping units, gates, valves, ect.
1,2,3, etc.	Suffix for electrical device numbering, such as 701, 702, ect.
*	Delineated relay

RELAY DESIGNATIONS

AL	Alarm relay
BR	Bearing temperature relay
CR	Control relay
FL	Field loss relay
FR	Field application relay
GF	Ground protective relay
IS	Incomplete sequence relay
LS	Lockout relay
OC	Overcurrent relay
OL	Overload relay
OV	Overvoltage relay
PL	Pullout (Loss of synchronism relay)
RC	Remote control relay
RSP	Remote sensing relay
SC	Spurious sage (Damper winding) relay
SR	Shift register
TD	Time delay relay
UF	Under frequency relay
UV-SPP	Undervoltage single and reverse phase relay
WT	Winding temperature relay

CONTACTOR DESIGNATIONS

FC	Field contactor
LC	Lighting contactor
M	Main contactor
MA	Air compressor motor contactor
MF	Fan motor contactor
MG	Gate motor contactor
MO	Oil pump motor contactor
MW	Water motor contactor
	Other suffix as applicable
	-C Closing function
	-L Lowering function
	-O Opening function
	-R Raising function
S	Starting contactor
PS	Part winding
PT	Part transition contactor } Reduced voltage starting
R	Run contactor

SWITCH DESIGNATIONS

CS	Control switch
FDS	Foreign circuit disconnect switch
FS	Float switch (Use suffix letter_ – E-vessel, F-pipe, R-reservoir, S-sump, T-tank)
LS	Limit switch
PS	Pressure switch
SS	Selector switch
TS	Torque switch
TSW	Transfer switch

TRANSFORMER DESIGNATIONS

CCT	Control circuit transformer
CT	Current transformer
PT	Potential transformer
T	Transformer
TC	Transformer oil temperature
TL	Transformer oil level
TP	Transformer pressure relief
SST	Station service transformer

INSTRUMENT AND METER DESIGNATIONS

AM	Ammeter
AS	Ammeter transfer switch
CNT	Elect counter
CHT	Telegraphic instrument
FF	Fossi-Taylor meter
FGT	Phase shifting transformer
HDM	Recording demand meter
TM	Time meter
F	Voltmeter
DVR	Remoter
DVRG	Verbour meter
VS	Voltmeter transfer switch
W	Wattmeter
WH	Watthour meter
WHD	Watthour demand meter
	Indicates recording instruments. Use selected in not part of the symbol. Replace the asterisk with letter or letters depending on the function of the instrument

DEVICE SYMBOLS

	Control switch
	Ammeter transfer switch
	Voltmeter transfer switch
	Surge arrester
	Capacitor
	Reactor
	Potential transformer
	Current transformer
	Power or distribution transformer
	Six grounded connection
	Delta connection
	Broken delta connection
	Open delta connection (corner grounded)
	Disconnecting switch
	Liquid level switch (Normally open)
	Vacuum and pressure switch (Normally closed)
	Temperature actuated switch (Normally open)
	Flow actuated switch (Normally open)
	Limit switch-direct actuated (Normally open)
	Torque switch (Normally closed)
	3-Position selector switch
	Air circuit breaker (Semiconductor trip 1 Frame size, 2 Inverse time trip, 3 Instantaneous trip
	1 Rectifier, 2 Resistor, 3 Inverter
	Silicon controlled rectifier (Solid state DC switch)
	Air circuit breaker, electricity operated
	Air circuit breaker, withdraw type
	Contactor with thermal trip
	Contactor with magnetic trip
	Contactor with OT and magnetic trip relay
	Contactor (Normally open)
	Contactor (Normally closed)
	Auxiliary contactor (Closes when main device is closed)
	Auxiliary contactor (Open when main device is closed)
	Relay contact number
	Relay coil, contactor coil
	Non-gap disconnecting switch
	Fuse
	Fuse, current limiting type
	Instrument shunt
	Resistor
	Rheostat, or potentiometer
	Separable connector
	Indicating lamp R-white, R-red, G-green, Y-yellow, A-amber, B-blue
	Battery
	Bell
	Horn
	Pushbutton (Normally open, momentary contact)
	Pushbutton (Normally closed, momentary contact)
	Maintained contact pushbutton
	Probe, water level detector
	Limit interrupter switch
	Motor
	Triac (Solid state AC switch)
	Wound rotor motor

WIRING SYMBOLS

	Ground connection
	Interconnection between separately owned systems
	Duplex single-gang plug receptacle
	Single weatherproof plug receptacle
	Watertight three-phase power receptacle
	Single pole switch
	Three way switch
	Luminaire, letter indicates type, number indicates voltage
	Represents connection from external equipment. Does not necessarily represent a terminal block.
	High voltage cable termination
	Represents connection from external equipment via multi-pair control (signal) cable

GROUND SYMBOLS

	Cable exposed
	Cable embedded in concrete
	Cable concealed but not embedded
	Cable buried directly in earth
	Ground rod
	Welded or bolted connection
	Cable riser
	Indicates ground when required for clarity
	Ground connector per 40-D-4534, Fig. 4
	Ground ring

CONDUIT SYMBOLS

	Exposed
	Embedded in concrete
	Concealed but not embedded
	Buried directly in earth
	Bending toward observer
	Bending away from observer
	Dropped
	Pull box or junction box
	Designation number
	Liquid tight flexible metal conduit
	Bending bushing, conduit in cable

NOTES

1. If designations and symbols other than the ones shown on this drawing used, they shall be shown on the appropriate drawing.
2. For equipment designations and symbols refer to NEMA Standards Pub. 200-1970.
3. Symbols in control circuits are shown in the deenergized position. Liquid level switches are shown with liquid continuous empty. Vacuum and pressure switches are shown at ambient pressure. Temperature switches are shown at ambient temperature.

1-3-81	REVISED TITLE BLOCK AND REMOVED D-4534-4
1-3-81	
1-3-81	NOMENCLATURE
1-3-81	

ALWAYS THINK SAFETY

DEPARTMENT OF THE ARMY
CORPS OF ENGINEERS
SEATTLE DISTRICT

PUMPING PLANT
ELECTRICAL INSTALLATIONS
DESIGNATIONS AND SYMBOLS

DESIGNED	DATE	APPROVED	
DRAWN	DATE	CHECKED	DATE
CHECKED	DATE	APPROVED	DATE
CONTRACT NO.	DESIGNATION	SHEET NO.	
SHEET NO.	SHEET NO.	104-D-757	

1022-155-255

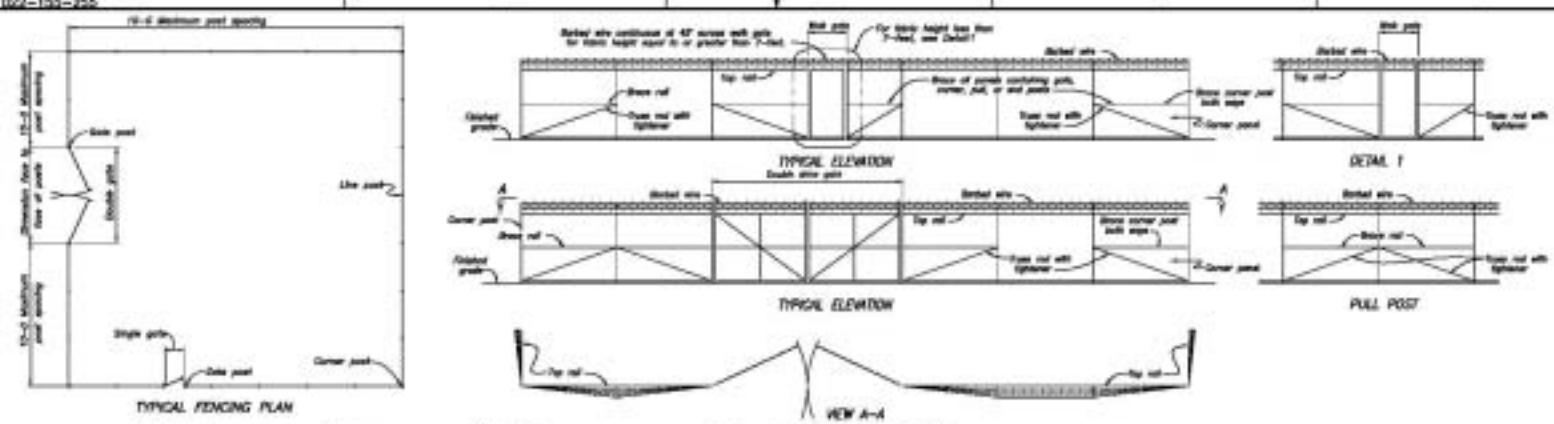

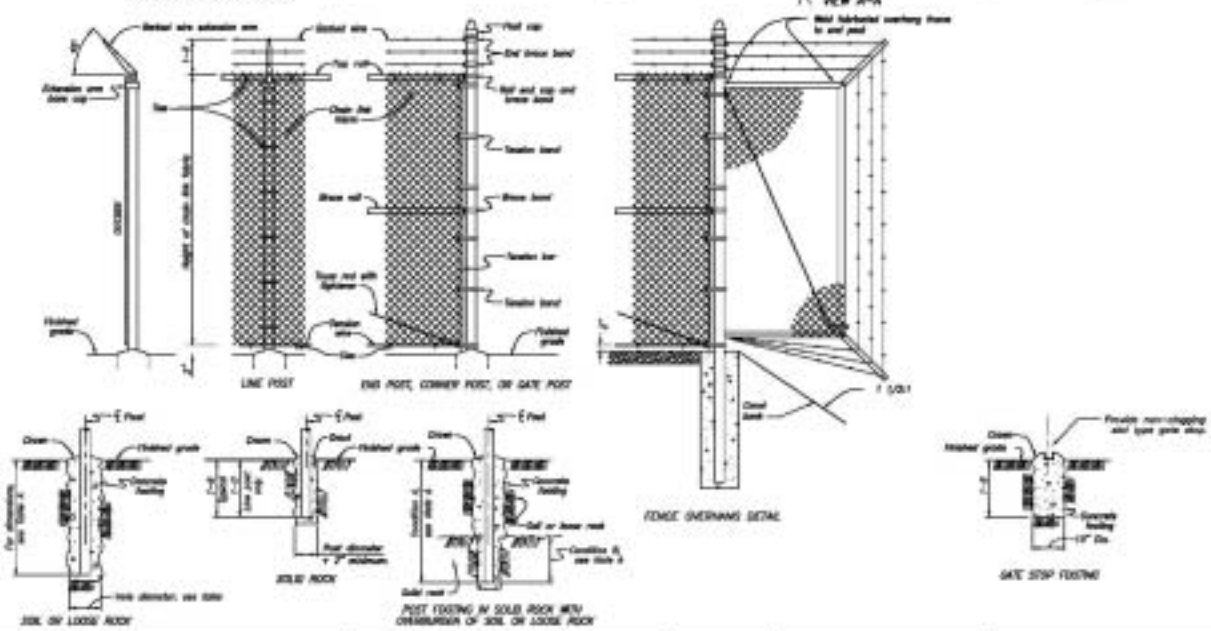

TABLE A

POST FOOTING SIZES IN SOIL OR LOOSE ROCK				
POST	FABRIC HEIGHT	HOLE DIAMETER AT TOP	HOLE DEPTH	POST EMBEDMENT
Line	2 ft. to 4 ft.	6 inches	24 inches	21 inches
Line	6 ft.	8 inches	30 inches	27 inches
Line	8 ft. to 12 ft.	8 inches	38 inches	36 inches
Terminal	2 ft. to 5 ft.	10 inches	32 inches	30 inches
Terminal	6 ft. to 12 ft.	12 inches	38 inches	36 inches

Note: A: Safety Condition A or Condition B.
Condition B: Depth required for footing in soil or loose rock.
Condition C: Depth required for embedment in rock.

NOTES

All fencing materials and accessories shall be in accordance with the specifications and the Chain Link Fencing Manufacturers Institute (CLFMI) standards.
All post and brace dimensions shall be in accordance with Table A (CLFMI). Concrete footing dimensions shall be in accordance with Table A above.
See site plans for fence layout and swing of gate.
Install pull posts at a maximum interval of 200 feet and at changes in horizontal or vertical alignment.
Weld all joints between tubular gate frame members and frame overhangs or use heavy fittings to provide tight and watertight connections.
Provide hitches, stops and keepers for all gates as specified.
End posts, corner posts, pull posts, and gate posts are designed as terminal posts.
Brace rails are not required for fabric less than 8 feet high.
For typical grounding details, see 40-D-4334, 40-D-4335 and 40-D-4336.

ALWAYS THINK SAFETY

STANDARD DRAWINGS
CHAIN LINK FENCING DETAILS

CLFMI STANDARD

9003–100–217

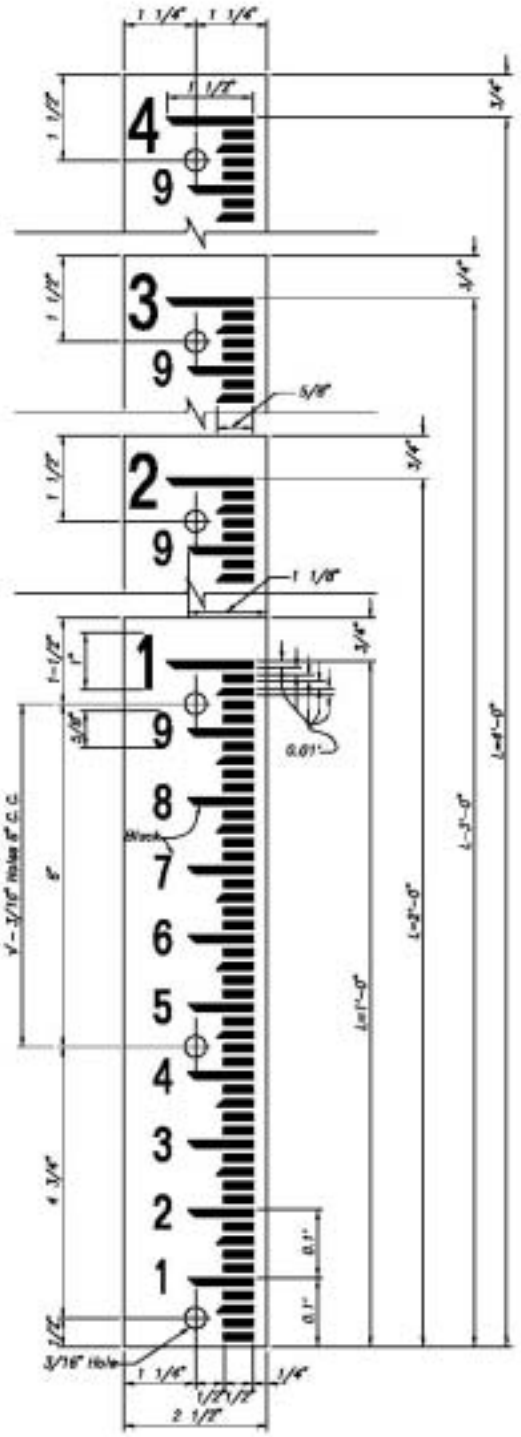

NOTES:

Gages to be of No. 18 gage (U.S. standard) mild steel plate and to be covered with porcelain enamel with a minimum thickness of 12 mils on numeral side and 3 mils on the reverse side and on edges where plate has been cut, punched or drilled.

All cutting, drilling and punching of the plates shall be completed before the porcelain enamel is applied.

The face of the gage shall be white and all numerals and graduations shall be black.

Graduations shall be sharp and accurate to the dimensions shown.

The length "L" shall be as given in the schedule. In case a greater length than 4'–0" is required the details shall be similar to details shown for shorter lengths.

ALWAYS THINK SAFETY

STANDARD DETAILS

ENAMELED WEIR GAGES

9003–100–217