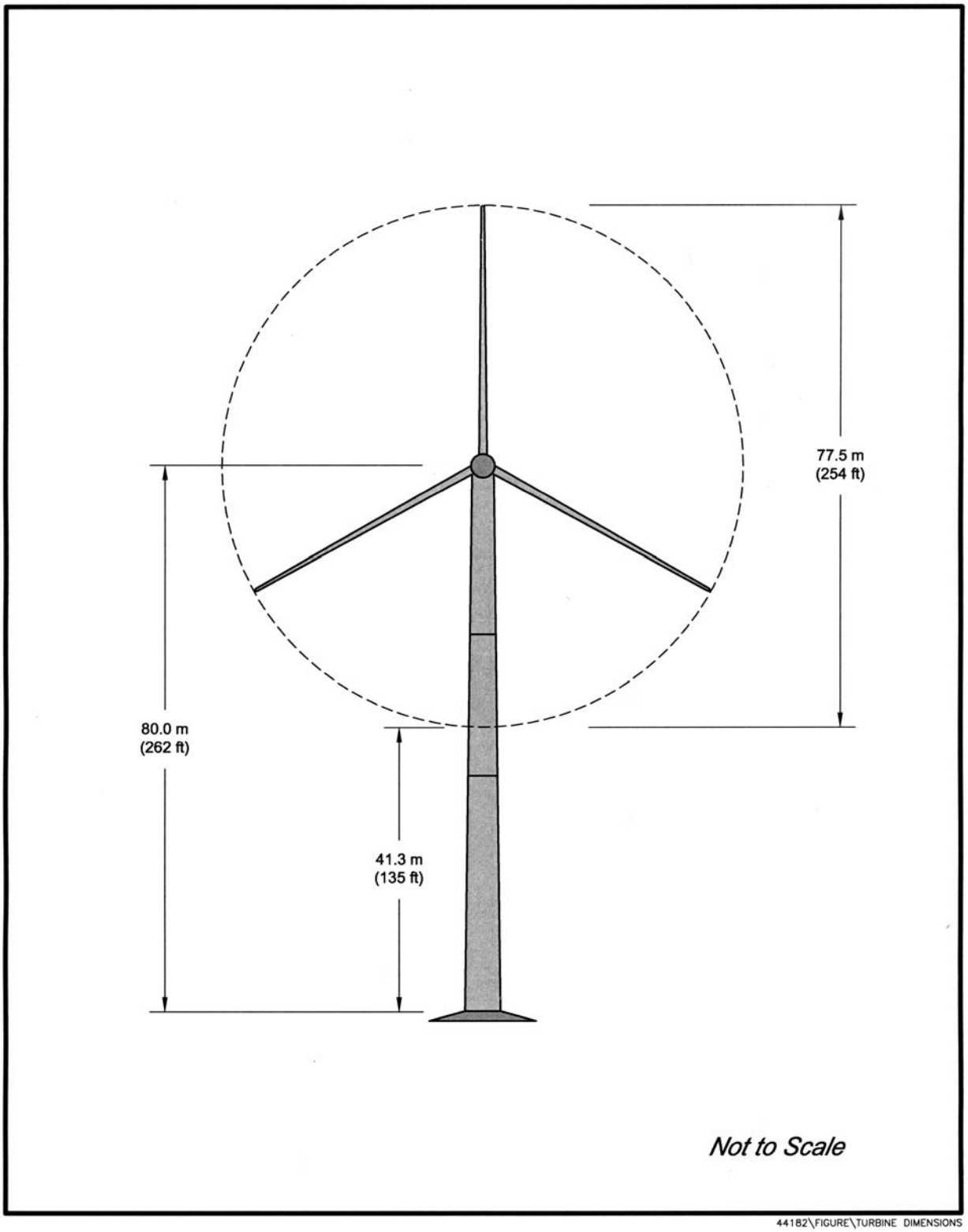

Figure F-1.2 Typical Wind Turbine.