DOE/EA-1546

FINAL ENVIRONMENTAL ASSESSMENT

Appalachian-Pacific Coal Mine Methane Power Co., LLC

LNG from Coal Mine Methane for Industrial and Transportation Applications

Federal Number 2 Mine
Parrish Shaft Site
Monongalia County, West Virginia

February 24, 2006

U.S. Department of Energy
National Energy Technology Laboratory

National Environmental Policy Act (NEPA) Compliance
Cover Sheet

Proposed Action: The U.S. Department of Energy (DOE) proposes, through a cooperative agreement with Appalachian-Pacific Coal Mine Methane Power Co, LLC, to provide funds for the construction of a facility to demonstrate the feasibility of converting coal mine waste methane, commonly referred to as coal mine gas (CMG), into liquefied natural gas (LNG) for use in industrial and heavy transportation sectors. The facility will be located at the Parrish Shaft site of the Federal Number 2 Mine near the unincorporated town of Crossroads in western Monongalia County, West Virginia. DOE will provide less than 50% ($4,606,844) of the funding required for the project.

Type of Statement: Environmental Assessment

Lead Agency: U.S. DOE; National Energy Technology Laboratory (NETL)

DOE Contacts:

Project Information:	NEPA Information:
Roy Spears	John Ganz
NEPA Document Manager	NEPA Compliance Officer
U.S. Department of Energy	U.S. Department of Energy
NETL	NETL
3610 Collins Ferry Road	3610 Collins Ferry Road
P.O. Box 880	P.O. Box 880
Morgantown, WV 26507-0880	Morgantown, WV 26507-0880
304-285-5460 (voice)	304-285-5443 (voice)
304-285-4403 (fax)	304-285-4403 (fax)
roy.spears@netl.doe.gov	john.ganz@netl.doe.gov

Abstract: The U.S. Department of Energy (DOE) prepared this Environmental Assessment (EA) to assess the environmental and human impacts that would result from the DOE's participation in a cooperative agreement between the DOE and Appalachian-Pacific Coal Mine Methane Power Co., LLC (Appalachian-Pacific) for the construction and operation of a process to make LNG from Coal Mine Gas (CMG) for Industrial and Transportation Applications. DOE's objective in participating in the agreement is to support demonstration of a technology that has the potential to reduce methane emissions from coal mines. Specifically, DOE seeks to provide partial funding ($4,606,844, less than 50%, of the total project cost) to demonstrate the application of a system which would collect "CMG" (waste methane from the mined out portion of an underground mine following extraction of the coal using longwall mining), upgrade the gas by removing impurities (including water, oxygen, carbon dioxide, and nitrogen), and compress and refrigerate the purified gas, converting it to LNG. Appalachian-Pacific will target both industrial and heavy vehicle applications for consumption of the produced LNG.

The LNG production system would be installed on a site currently owned by Eastern Associated Coal Corporation located in an unincorporated part of western Monongalia County, West Virginia. Appalachian-Pacific would purchase coal mine methane from Northwest Fuel Development Inc., which currently owns the rights to the coal mine gas at the Federal Number 2 Mine, Parrish Shaft Site. The environmental analysis identified that the most notable changes to result from the proposed project would occur in the following areas: LNG storage, LNG transportation, community noise, and safety and health. No substantive adverse environmental concerns were identified in analyzing these changes.

Public Comments: DOE encourages public participation in the NEPA process. DOE consulted with a number of State and Federal agencies as part of the scoping process to identify areas to be analyzed in this EA., and the draft EA was distributed for review and comment to Federal and state agencies and to the public and posted on the NETL website. A legal notice advising of the availability of the draft EA for public review and comment was placed in the *Dominion Post* for three days, and copies of the draft EA were made available for review in the Public Library in Morgantown, WV and in the Clay-Battelle Public Library in Blacksville, WV. DOE received three comments regarding the proposed action. These comments, summarized below, have been addressed in this Final EA as noted.

Comment	Response
The Energy Efficiency Program Manager of the West Virginia Development Office expressed support for the proposed project and noted no objections to the draft EA.	Letter is included in the Final EA.
A nearby resident expressed concern over the responsiveness of the current lease-holder to concerns over noise from an existing project.	Expected noise impacts are analyzed in section 4.11. Northwest Fuel development, Inc., the current lease-holder, and Appalachian-Pacific, the industrial participant for the proposed project have entered into contractual language to limit noise to the levels analyzed previously. DOE has incorporated this agreement into contract language in its Cooperative Agreement with Appalachian-Pacific, and will prepare a Mitigation Action Plan to ensure that noise from the site is monitored and timely addressed should noise exceed significance limits analyzed in the EA.
A nearby resident noted that school bus times listed in Table 4.4 were not correct for the school bus stop nearest to the proposed site.	Table 4.4 has been amended to include the full schedule of Monongalia County school buses servicing families located on Zeb Haught Road and nearby.

Table of Contents

Section **Page**

List of Figures, Tables, and Appendices iii

List of Acronyms and Abbreviations v

1.0 Introduction 1

2.0 Purpose and Need for Agency Action 3

2.1 DOE's Purpose 3
2.2 DOE's Need for Action 5
2.3 Scoping 6
2.4 Scope of the Environmental Assessment 6

3.0 Description of Alternatives Including the Proposed Action 9

3.1 Background 9
3.2 Description of the Proposed Action 10
3.3 Project Schedule 13
3.4 Alternatives to the Proposed Project 13
3.4.1 No Action 14
3.4.2 Production Instead of Purchasing Electricity 14
3.4.3 Stationary Versus Portable LNG Storage and Storage Configuration 15

4.0 Affected Environment and the Environmental Consequences of the Proposed Action 17

4.1 Approach 17
4.2 Site Description 17
4.3 Air Quality 17
4.3.1 Affected Environment 20
4.3.2 Environmental Consequences 21
4.4 Water Quality 21
4.4.1 Affected Environment 21
4.4.2 Environmental Consequences 22
4.5 Socioeconomic Resources 23
4.5.1 Affected Environment 23
4.5.2 Environmental Consequences 23
4.6 Safety and Health 23
4.6.1 Affected Environment 24
4.6.2 Environmental Consequences 25
4.7 Floodplains and Wetlands 32
4.7.1 Affected Environment 32
4.7.2 Environmental Consequences 34
4.8 Flora and Fauna 34
4.8.1 Affected Environment 34
4.8.2 Environmental Consequences 35
4.9 Cultural and Historic Resources 35

4.9.1 Affected Environment 36
4.9.2 Environment Consequences 37
4.10 Soils and Geology 37
4.10.1 Affected Environment 37
4.10.2 Environmental Consequences 38
4.11 Noise 38
4.11.1 Affected Environment 41
4.11.2 Environmental Consequences 44
4.12 Environmental Justice 44
4.12.1 Affected Environment 45
4.12.2 Environmental Consequences 46
4.13 Aesthetics 46
4.13.1 Affected Environment 46
4.13.2 Environmental Consequences 47

5.0 Regulatory Compliance 49

5.1 Federal Requirements 49
5.2 State Requirements 51
5.3 Local Requirements 51
5.4 Non-Governmental Regulations of LNG 52

6.0 Cumulative Effects and Long-Term Environmental Consequences of the Proposed Action 53

7.0 Irreversible and Irretrievable Commitments of Resources 55

8.0 Environmental Consequences of the No Action Alternative 57

9.0 Similar Actions and Actions Being Considered Under Other National Environmental Policy Act Reviews 59

10.0 Relationship of the Proposed Action to the Applicable Federal, State, Regional, of Local Land Use Plans and Policies 61

11.0 Stakeholder Participants 63

12.0 References 65

13.0 List of Agencies and Individuals Contacted 67

Appendix A 81

Appendix B 85

List of Figures and Tables

Figure 3.1 Location of Proposed Project 9

Figure 3.2 General Process Diagram Showing Project Components ……..…... 11

Figure 3.3 Photo Showing Proposed Location Relative to Current Land Use ….. 11

Figure 3.4: Rendering Showing the Proposed Project (foreground) on the Parrish Shaft Site ……..….. 12

Figure 3.5 Worst-case Consequence Analysis for Vertical Tank Alternative 16

Figure 4.1 Consequence Analysis of Worst-Case Release of LNG ……. 31

Figure 4.2 Access Road to the Proposed Site at the Junction with County Road 13 ……. 32

Figure 4.3 Photo of Proposed Project Site South of the Existing Northwest Fuel Location …… 32

Figure 4.4: Flood Insurance Rate Map Panel Showing Right Branch of Miracle Run ……... 33

Figure 4.5 Power Generation Units (Gensets) Associated with the Existing Commercial Northwest Fuel Activity …… 41

Figure 4.6 Noise Survey Instrument on Property Line Adjacent to Nearest Residence ……. 42

Table 4.1 National Ambient Air Quality Standards (NAAQS) …….. 18

Table 4.2 Allowable PSD Increments …… 19

Table 4.3 Expected Emissions of Criteria Pollutants for the Proposed Project …….. 21

Table 4.4 School Bus Schedule for Crossroads Area ……... 31

Table 4.5 Parish Shaft Site Baseline Noise Survey Summary ……. 43

.

This Page Intentionally Left Blank

List of Acronyms and Abbreviations

adt	average daily traffic
AGA	American Gas Association
ARCHIE	Automated Resource for Chemical Hazard Incident Evaluation
CAAA	Clean Air Act Amendments
CMG	Coal mine gas
CMM	Coal mine methane
CFR	Code of Federal Regulations
CO	carbon monoxide
CO_2	carbon dioxide
CSR	Code of State Regulations
dB	decibel (sound level unit of measurement)
dBA	A-weighted decibel scale
DAQ	Division of Air Quality
DNL	Day-night equivalent noise level
DOE	U.S. Department of Energy
DOI	Department of the Interior
EA	Environmental Assessment
EACC	Eastern Associated Coal Corporation
EO	Executive Order
EPA	U.S. Environmental Protection Agency
FEMA	Federal Emergency Management Agency
FERC	Federal Energy Regulatory Commission
GHG	greenhouse gases
HAP	Hazardous Air Pollutant
Hz	hertz (sound frequency unit of measurement)
IPTC	Intermodal Portable Tank Container
L_{dn}	day-night equivalent noise level - sometimes also listed as DNL
L_{eq}	equivalent continuous sound level
Lbs/MMscf	pounds per million standard cubic feet
LEL	Lower Explosive Limit
LNG	liquefied natural gas
LPMRC	Low Pressure Mixed Refrigerant Cycle
M	meters
M^3	cubic meters
MACT	Maximum Achievable Control Technology
MMCF	million cubic feet
MMTCE	million metric tons of carbon equivalents
MSDS	Material Safety Data Sheet
NAAQS	National Ambient Air Quality Standards
NEPA	National Environmental Policy Act
NESHAP	National Emission Standards for Hazardous Air Pollutants
NETL	National Energy Technology Laboratory
NFPA	National Fire Protection Association

NHPA	National Historic Preservation Act of 1966
NO_2	nitrogen dioxide
NPS	National Park Service
NWI	National Wetlands Inventory
NTE	not to exceed
O_3	ozone
OAQ	WVDEP Office of Air Quality
ONG	Oil and Natural Gas Industry
OSHA	Occupational Safety and Health Administration
Pb	lead
$PM_{2.5}$	Particulate matter of less than 2.5 micron size
PM_{10}	Particulate matter of less than 10 micron size
PSM	Process Safety Management
PSD	Prevention of Significant Deterioration
RD&D	Research, Development and Demonstration
scfm	standard cubic feet per minute
SHPO	State Historic Preservation Officer
SIP	State Implementation Plan
SO_2	sulfur dioxide
T&E	threatened and endangered
TMDL	Total Maximum Daily Load
TWA	Time-weighted average
UEL	Upper Explosive Limit
USC	United States Code
USFWS	U.S. Fish and Wildlife Service
USGS	U.S. Geological Survey
VFD	Volunteer Fire Department
VOC(s)	Volatile organic compound(s)
VPSA	vacuum pressure swing adsorption
WVDEP	West Virginia Department of Environmental Protection
^{o}F	temperature in degrees Fahrenheit
µg	micrograms (1×10^{-6} grams)
µPa	micropascal (unit of pressure used for reference in sound measurement)

1.0 Introduction

This Environmental Assessment (EA) provides the results of a study of the potential environmental impacts from construction and operation of coal mine gas recovery and utilization technologies on property in western Monongalia County, WV, presently owned by Eastern Associated Coal Corporation and leased by Northwest Fuel Development, Inc. The U.S. Department of Energy (DOE) is implementing a cooperative agreement with Appalachian-Pacific Coal Mine Methane Power Co., LLC (Appalachian-Pacific) of Arlington, Virginia to demonstrate that coal mine waste methane emissions could be collected and converted for use as liquefied natural gas (LNG) for consumption by commercial LNG users. In March 2000, DOE issued a competitive solicitation (DE-PS26-00NT40767) to facilitate the development of coal mine waste methane recovery and utilization technologies. In response to this solicitation, Appalachian-Pacific submitted a proposal to install a waste methane collection and processing system using refrigeration liquefaction technologies to produce LNG.

The proposed project would demonstrate that coal mine waste methane emissions could be utilized as a fuel in the form of liquefied natural gas or substitute pipeline gas. The project would demonstrate that waste methane could be economically processed into higher quality methane and converted to LNG for sale and utilization. Coal mine waste methane is normally vented to the atmosphere, contributing to global warming; therefore the proposed project would also demonstrate the feasibility of reducing methane emissions from mining operations in a manner that is economically attractive to U.S. mining operations. The resulting demonstration would provide coal and energy companies with cost-effective commercial technology systems for effective recovery and utilization of coal mine methane emissions.

The purpose of the EA is to determine if the proposed action could potentially cause significant impacts to the environment. If potentially significant impacts are identified, and if they cannot be reduced to insignificance or avoided, then a more detailed Environmental Impact Statement would be prepared. If no significant impacts are identified, a Finding of No Significant Impact would be prepared and made available to the public, along with the EA itself, before the proposed project proceeds.

This study was prepared in accordance with the National Environmental Policy Act (NEPA) of 1969 (42 United Sates Code 4321 *et seg.*), the Council on Environmental Quality's Regulations [Title 40, Code of Federal Regulations (CFR), Parts 1500-1508], and the Department of Energy's NEPA Implementing Procedures (Title 10, CFR, Part 1021).

This Page Intentionally Left Blank

2.0 Purpose and Need for Agency Action

2.1 DOE's Purpose

As part of its stated agency mission, U.S. DOE's National Energy Technology Laboratory (NETL) provides science, technology, and policy options to resolve environmental, supply, and reliability issues associated with the use of fossil energy. Consistent with this mission and in partnership with its stakeholders, NETL supports efforts by industry to increase energy efficiency, minimize waste, reduce environmental impacts, and increase the availability of domestic energy production through productivity and operational enhancements and improvements. The Gas Technology Management Division of the NETL Office of Natural Gas implements external research, development and demonstration (RD&D) projects for natural gas processing, transportation fuels and chemicals, fuels advanced research, energy conservation and military applications.

Coal mine methane (methane that is released from coal seamsas a consequence of the mining process) is one source of natural gas that NETL is investigating as a potential resource for energy production. Methane is removed from coal seams either in advance of mining operations using conventional drilling techniques or by mine ventilation systems during active mining operations. Methane is vented from coal mines out of safety concerns for miners working the mine. Once a seam is mined out using longwall mining systems, the surrounding strata, or rock layers, collapse, filling the void left from mining. This collapsed area, referred to as "gob", likewise can contain methane in recoverable quantities, and is sometimes referred to as "gob gas", a mixture of air ,methane, and other gases such a s CO2. In 2003, active U.S. coal mines liberated a total of approximately 3,326 Gg (gigagrams) of methane (EPA, 2005). Abandoned coal mines released an additional 377 Gg. Much of this methane is simply released to the atmosphere. EPA estimates that in 2003, only 766 Gg (approximately 30 percent) of methane liberated from active underground mines was recovered and put to productive use while 72 Gg (approximately 19 percent) of methane was recovered from abandoned mines (EPA, 2005).

One obstacle to the productive use of coal mine gas (CMG) is the low quality of the gas. Pipeline quality natural gas typically consists of 96% methane (EPA, 1997). CMG produced from coalbed seams ahead of mining operations is generally of high quality and can be injected directly into natural gas pipelines for sale. The methane content of gas from the mine void and the gob zone, which has been mixed with mine ventilation air in varying amounts, typically ranges from 65 to 85% (EPA, 1997). CMG is also typically saturated with water vapor. This further degrades the mine gas from pipeline specifications, which typically limit water vapor to no greater than 7 lbs per million standard cubic feet (lbs/MMscf). For CMG to be an acceptable energy resource, the gas must be upgraded to pipeline specifications. Because of the cost of upgrading CMG and the smaller quantities of gas typically produced by individual mine vents, CMG is often simply vented to the atmosphere near ground level. Released in this manner, Coal Mine Methane (CMM) in the CMG contributes to the ozone problems in

the troposphere (the lowest layer of the earth's atmosphere) and at high concentrations can harm nearby vegetation and present a fire hazard (Brunner, 1999).

Methane also contributes to the "greenhouse effect". The greenhouse effect describes the buildup of heat on the earth's surface due, in part, to thermal radiation from the earth's atmosphere. Energy from the sun entering the earth's atmosphere heats the earth's surface and in turn is radiated back into space. Some of this outgoing energy is absorbed by atmospheric gases. The atmosphere, in turn, radiates energy in all directions including back toward the earth's surface. Because the earth's surface is warmer than it would be without the heat contributed by atmospheric radiation, the effect is referred to as the "greenhouse effect" referring to how glass panels in a garden greenhouse retain heat from the sun.

The greenhouse effect is necessary for the earth's surface to support life; however excess amounts of greenhouse gases (gases in the atmosphere that affect the earth's temperature and contribute to the greenhouse effect) are believed to contribute to global climate change. Some greenhouse gases (GHG) result exclusively from human activities; others occur naturally or in combination with human activities. Naturally occurring GHG include water vapor, carbon dioxide, methane, nitrous oxide, and ozone. Human activities add to the levels of naturally occurring greenhouse gases.

Individual greenhouse gases contribute to global warming in differing degrees. Methane is 23 times more potent in trapping heat than carbon dioxide (EPA, 2005). In assessing the contribution to global warming, estimates of GHG emissions are presented in terms of their equivalent effect relative to an equal amount of carbon dioxide. The unit used to express this equivalency is million metric tons (1000 kilograms) of carbon equivalents (MMTCE). One million metric tons is equal to one trillion grams, and the unit is sometimes expressed as teragrams (trillion grams) of CO_2 equivalents (Tg CO_2 Eq.). Total annual methane emissions from sources within the U.S. in 2003 were approximately 543.3 (Tg CO_2 Eq.) (EPA, 2004). Overall, methane's contribution to global warming is second only to carbon dioxide. Coal mining is the fourth largest source of atmospheric methane in the U.S. In 2003, mining activities contributed approximately 53.8 (Tg CO_2 Eq.) to methane emissions (EPA, 2005).

NETL is currently conducting activities under four specific climate change objective areas, including:

- Developing protocols and methodologies for the cost-effective implementation of flexible, market-based mechanisms for greenhouse gas emission control.
- Promoting the international transfer of clean technologies.
- Researching and encouraging the domestic adoption of greenhouse gas reducing technologies, and
- Training, developing analytical tools, and building capacity to develop regional and global capabilities to mitigate the effects of climate change.

The proposed project would be consistent with the DOE's mission to ensure energy

availability and to develop domestic renewable energy resources. It would utilize a source of energy (methane) that is a waste byproduct of coal mining and a potent greenhouse gas. The proposed project would be consistent with DOE's ongoing research in developing and implementing GHG-reducing technologies because the project's net effect could be to reduce the global warming potential of captured methane by 95%. This project would also be consistent with DOE's commitment to environmental quality by demonstrating technologies that utilize waste methane, a major contributor to global warming.

2.2 DOE's Need for Action

NETL identified this opportunity after evaluating responses to solicitation number DE-PS26-00NT40767, entitled Recovery and Utilization of Coal Mine Methane: Pilot-Scale Demonstration Phase, released in March 10, 2000. The objective of this effort is to reduce methane emissions associated with underground coal mining operations by demonstrating state-of-the-art coal mine gas recovery and utilization technologies. The resulting demonstrations would provide coal and energy companies with cost-effective commercial technology systems for effective recovery and utilization of coal mine methane emissions.

The project would demonstrate that coal mine waste methane emissions could be utilized as a fuel source in the form of LNG or pipeline gas. It would also demonstrate that waste methane could be economically processed, cooled and compressed, sold, and utilized. Coal mine waste methane is normally vented to the atmosphere contributing to global warming; therefore the proposed project would also demonstrate the feasibility of reducing methane emissions from mining operations in a manner that is economically attractive at U.S. mining operations.

With proper management and oversight, there is a high probability of success with this project. The proposed approach would utilize lower quality methane to produce a liquid fuel that can easily be transported where needed. Volume reductions are significant with 1 m^3 of LNG approximately equal to 610 m^3 of natural gas (NETL, 2004). LNG has several desirable attributes including the ability to be transported to locations lacking natural gas lines and the potential to use LNG for extra supply during peak natural gas demand. The integrated gas processing/LNG conversion project would capture data on how efficiently waste methane can be processed and utilized for LNG production. Such information could lead to implementation of this or similar technologies at other sites where suitable waste methane sources exist.

DOE's decision considered in the EA is whether to provide funding for the construction of this project. Appalachian-Pacific would be the responsible party for the operation and maintenance of the project if the decision is made to approve the proposed action.

2.3 Scoping

Internal scoping activities were conducted to identify significant issues associated with the proposed project. The scoping effort was based on previous knowledge of and experience at the proposed site, a review of the proposed technology, construction and operational requirements for the project, long-term plans, the environmental setting, and other information available on the project. Scoping activities have included: internal discussions of the project and its potential environmental implications; discussions with the industrial participant; DOE review of preliminary environmental information supplied by the industrial participant; on-site visits at the proposed location; and preliminary characterization of background conditions.

2.4 Scope of the Environmental Assessment

Materials provided by Appalachian-Pacific for the proposed LNG from Coal Mine Methane for Industrial and Transportation Applications project were reviewed by the DOE, and an internal scoping meeting was held in December 2004 to discuss potential environmental concerns to be considered in the EA. An initial visit to the project site was made in February 2005; DOE has visited the site a number of times subsequent to the initial visit. Based on these reviews, DOE prepared a list of resources of concern and an approach for their analysis in the EA.

No adverse pollution prevention or environmental justice issues were identified in the internal scoping process. The proposed project would utilize a waste product (CMM) and put it to beneficial use, thereby presenting an opportunity for pollution prevention. The technology considered does not involve the use of hazardous materials other than oil, ethylene glycol, and LNG, and would not generate wastewater. It thereby represents a favorable pollution prevention strategy. Environmental Justice, as described in Executive Order 12898, calls for the fair treatment and involvement of all people regardless of race, ethnicity, culture, income, or education level with respect to environmental laws, regulations, and policies. The expected emissions from air pollutants would not move offsite to any cluster of minority populations. No disproportionately high or adverse impacts on low-income minority populations would result from the proposed action.

Though no impacts on flora and fauna and historical and cultural resources are expected, to comply with the NEPA regulations, coordination letters were forwarded to the U.S. Fish and Wildlife Service and State Historic Preservation Officer. These letters, and the responses from the agencies contacted, are included in Appendix A of this EA.

Based on the scoping process, the key issues identified and analyzed for the proposed action included the following:

- LNG transportation
- LNG storage
- Safety and health of employees

- Noise generation
- Land surface disturbance
- Release of LNG

For those resources requiring detailed analysis, a framework was developed to provide qualitative indicators of the impact assessment or threshold analysis. Qualitative analyses were applied for all resources except community noise.

LNG transportation was identified as a potential issue during scoping. LNG will be removed from the site daily via a truck over county roads and state and federal highways. It is anticipated that one or two trips will be required each day to remove the LNG produced. LNG removal will be scheduled to avoid periods of traffic concern, including school bus traffic and mine shift changes. Additional measures such as the use of flagmen when trucks enter the road or the addition of caution lights will be implemented if analysis indicates a need for additional safety. Applicable regulations will be followed.

LNG storage was another potential issue identified during scoping. LNG produced by the proposed project would be temporarily stored on-site in either a fixed vessel or in intermodal portable containers designed for cryogenic liquids (gases that are maintained in a liquid state by refrigeration to very cold levels). LNG storage would be located on-site and would be capable of storing up to 30,000 gallons of LNG. LNG storage will comply with National Fire Protection Association (NFPA) Standard 59A.

Safety and health of employees was also identified as a potential issue during scoping. LNG will be produced at temperatures of -260°F, providing the potential for cryogenic burns. To mitigate against this possibility, industry standard cryogenic liquid handling procedures will be followed and visitors to the site will be required to attend a short safety training briefing. Technicians will be certified after successfully completing a cryogenic liquids handling course from an industry source. Applicable OSHA standards will be followed, and the project would be subject to OSHA's process safety standard (29 CFR 1910.119).

Noise generation is another potential issue identified during scoping of the EA. Analysis of background noise values indicates that this area is a quiet rural community. People in the immediate area of the proposed project would be sensitive to any significant increase in noise levels resulting from this proposed project. The site has a history of noise concerns first from a mine ventilation fan, which was removed several years ago, and more recently from an on-going project (not related to the currently proposed action) that utilizes coalmine waste methane to generate electricity using internal combustion engines coupled to individual generators. Background information was collected from the proposed site.

Disturbance of land and aquatic environments at the project site is another potential issue. The proposed project would not result in any pollutant discharges to the adjacent watershed, and no disturbances of aquatic environments are expected. Land

disturbance would be limited to pouring concrete pads for equipment, laying of shallow gathering lines, and installing fencing around the project area which would be adjacent to and in front of the existing Northwest Fuel Development, Incorporated (Northwest Fuel) site. The affected environment for the analysis of impacts was considered to be the boundaries of the WV portion of Dunkard Creek watershed and Monongalia County. The proposed project was also evaluated with respect to floodplain restrictions and potential impacts on any identified wetlands.

Construction of the proposed project may also have some impacts on the immediate area. However, since this area has previously been altered for other mine-related projects, these impacts would be limited. Environmental consequences of land disturbance from the proposed action were evaluated for the project site area only.

Release of LNG either from on-site storage or during transportation was also identified as an issue that could significantly affect the environment or public safety. LNG is a colorless, non-toxic, nonflammable cryogenic liquid. Extensive field tests conducted for emergency response planning and commissioned by industry participants and the Federal Energy Regulatory Commission (FERC), which regulates LNG terminals where LNG imports are offloaded, have shown that LNG spilled on water undergoes a rapid phase transition (from liquid to gas), but does not produce an oil sheen. Accordingly, LNG is not covered under federal oil pollution prevention regulations codified at 40 CFR 110 *et seq*., and no spill prevention, control, and countermeasures (SPCC) plan is required. The quantity of LNG that could be stored on-site (up to 30,000 gallons) represents approximately 111,0000 pounds of methane gas at ambient pressure and temperatures. This quantity exceeds the 10,000 pound threshold that would trigger chemical accident prevention provisions under 40 CFR 68. These would include preparation of a Risk Management Plan (RMP), analysis of the worse-case release scenario based on the quantity present on-site, hazard reviews, preparation of written operating and maintenance procedures, operator training, and compliance audits.

Under the No Action Alternative, DOE would not participate in the proposed project nor provide funding to assist in the construction of the LNG generation system. For this proposed project, the industrial partner (Appalachian-Pacific) could decide to proceed with the project even if DOE decides not to participate. Potential project impacts discussed in this EA would then be realized no matter what the DOE decides. Should the industrial participant decide not to proceed without DOE's contribution, there are two possible outcomes. Northwest Fuel Development, Inc. (Northwest Fuel), the current holder of the rights to the CMG could continue to operate generators to produce electricity, or the waste methane could be vented to the atmosphere. The No Action Alternative is analyzed accordingly recognizing these possible outcomes. DOE'S involvement would insure that project data are objectively analyzed to evaluate the benefits this system may offer. Also, by keeping DOE involved, the neighbors would retain an advocate committed to analyzing potential environmental impacts and evaluating and/or implementing alternative engineering solutions for issues identified.

3.0 Description of Alternatives Including the Proposed Action

The proposed action is for the United States Department of Energy (DOE) to provide, through a cooperative agreement with Appalachian-Pacific Coal Mine Methane Power Co. of Arlington, VA, cost-shared financial support for the design, construction, and operation of an integrated system that uses coal mine waste methane to make liquefied natural gas. The proposed system would be located at the Parrish Shaft site of Eastern Associated Coal Corporation's (EACC's) Federal Number 2 Mine near the unincorporated town of Crossroads in rural western Monongalia County, WV (Figure 3.1). The cooperative agreement would result in a 4-year project that would demonstrate the collection, processing, and utilization of coal mine methane.

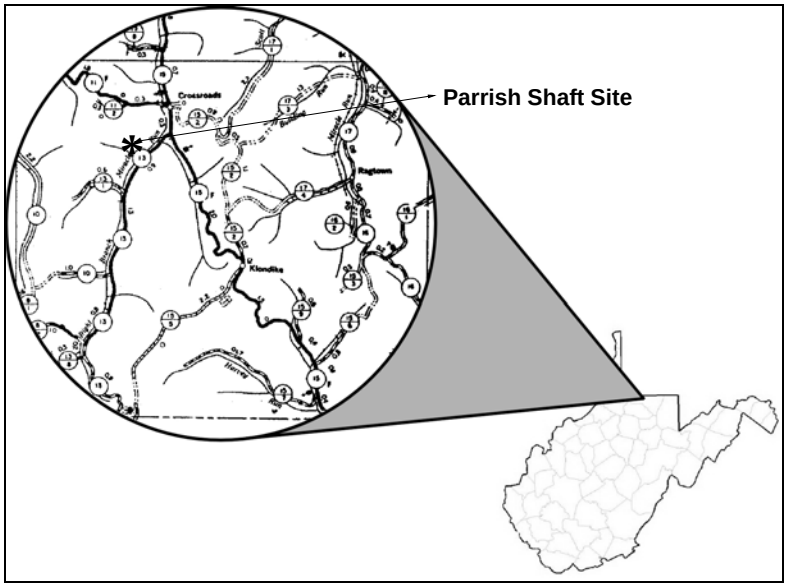

Figure 3.1: Location of Proposed Project

Under the proposed action, DOE would provide $4,606,844 (less than 50%) of the total cost for the proposed project. The cooperative agreement would result in a project to test the commercial viability of capturing low quality coal mine gas and processing the gas via dehydration and CO2 removal by means of VPSA technology, and refrigeration, followed by selling the gas in LNG form.

3.1 Background

The site for the proposed project would be Parrish Shaft of EACC's Federal Number 2 Mine in western Monongalia County, West Virginia. The Federal No. 2 Mine employs longwall mining techniques. As mining progresses through the coal seam, the area behind the longwall miner collapses, and the area fills with rock debris from the overlying and adjacent rock layers. This coal mine gas contains a mixture of methane and ventilation air. Currently, waste methane gas from the mine is used for electricity generation.

The Parrish Shaft site is located along an access road off of County Route 13 approximately 0.4 miles from County Route 15. The proposed site is located approximately 2.25 miles southeast of Wadestown, WV. The site was previously the location of a fan for the Federal No. 2 Mine. Approximately six years ago EACC removed the fan, and the site was converted to an emergency hoisting facility. The hoisting facility has since been removed and the site is currently used by Northwest Fuel, which utilizes the waste methane to generate electricity. The site is located in the Dunkard Creek watershed and is adjacent to the Right Branch of Miracle Run, a tributary of Dunkard Creek.

3.2 Description of the Proposed Action

Under the proposed project, Appalachian-Pacific would establish a facility to convert from 1.29 to 1.80 MMscfd[1] of coal mine gas[2] into 9,200 to 10,000 gallons per day of LNG. The project would combine two technologies - gas purification and cryogenic liquefaction - in an integrated system on a small field site. The gas processing would use a system whereby coal mine methane would pass through a coalescer, sulfatreat, and activated carbon followed by a compressor and oil cooler. Oxygen removal would then take place followed by vacuum pressure swing adsorption (VPSA) to remove carbon dioxide. Remaining natural gas would be sent to the main heat exchanger, the low-pressure mixed refrigerant cycle (LPMRC) refrigerant compressor, and the main cold box from which the nitrogen rich stream would be removed. The product LNG would be sent to storage. Up to 30,000 gallons of LNG would be stored on-site prior to removal by tanker trucks to various customer locations. Overall, the system would use about 750,000 cfd of coal mine methane that would otherwise be combusted for electric generation or vented to the atmosphere. A block diagram showing the waste methane utilization is shown is Figure 3.2.

Site preparation would consist of surface activities at the project site, which would be located adjacent to and south of the Northwest Fuel project site (Figure 3.3). The Northwest Fuel project is a previously DOE-funded project to demonstrate utilization of coal mine waste methane for integrated power generation. The cooperative agreement for the Northwest Fuel project is completed, and the DOE is not currently involved at the site or with Northwest Fuel. Northwest Fuel is currently operating under a farm out agreement with Dominion Gas and a lease Arrangement with EACC.. No significant land disturbance is planned except for the pouring of concrete pads beneath certain equipment, construction or installation of spill containment barriers required under NFPA 59A, and construction of a chain link fence, all of which would be removed and the land reclaimed at the termination of the project.

---

[1] MMscfd is million standard cubic feet per day. Assumed standard temperature and pressure conditions 68°F and 14.7 psia.

[2] The methane concentration of the coal mine gas is expected to range from 50 to 70%.

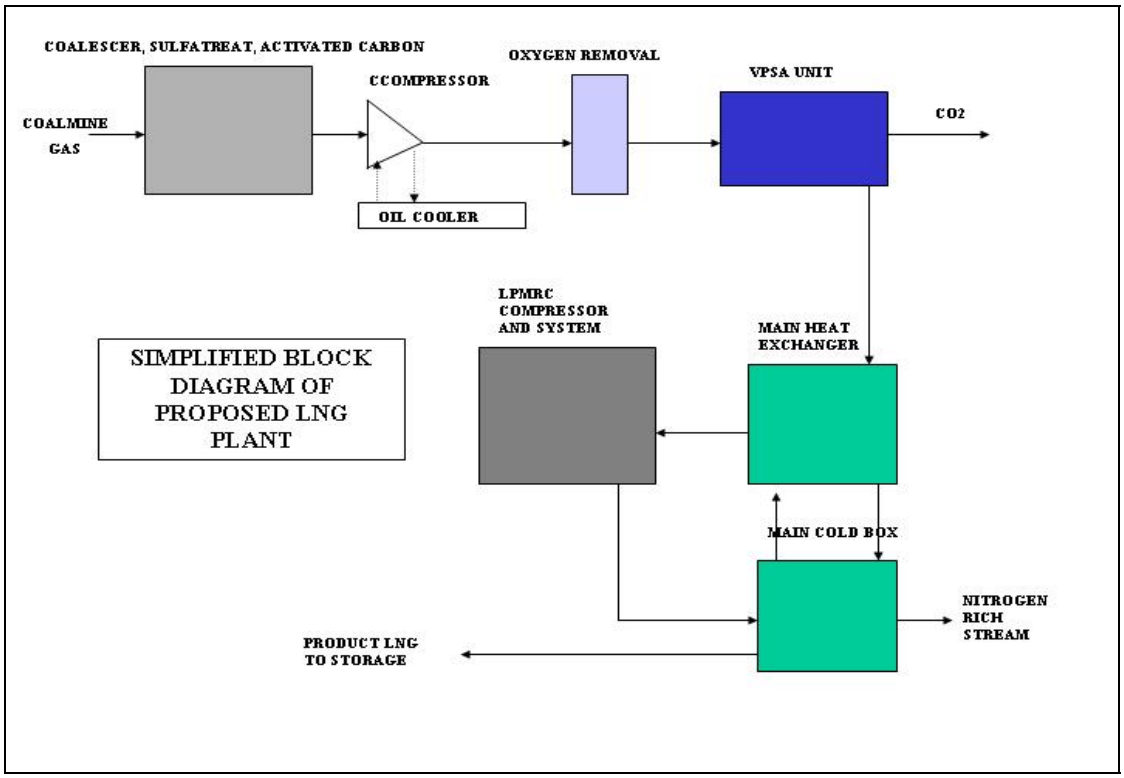

Figure 3.2: General Process Diagram Showing Project Components

Figure 3.3: Photo Showing Proposed Location Relative to Current Land Use

Equipment for the proposed project would be located on the Parrish Shaft site. The site would consist of the fenced area roughly L-shaped with approximate dimensions of 70 by 80 ft. Appalachian-Pacific's methane processing and LNG generation system would consist of several (current plan is for 6) integrated modules housed in skid-mounted containers each with standard outside dimensions 8 feet wide by 10 feet high by 20 feet long. An area of approximately 5,380 square feet would be needed for the entire proposed coal mine gas to LNG equipment. Coalmine methane for the proposed project would be supplied by Northwest Fuel using existing gathering lines and a new well at the Parrish Shaft coal mine gas will be removed from the mine cavity by suction blowers.

LNG produced by the proposed project would be temporarily stored on-site in either a fixed vessel or in transportable tankers. LNG storage, which would include a containment structure to prevent escape from the LNG in the event of a catastrophic failure of the tank, would be located above the 100 year flood elevation of Miracle Run. The LNG storage tank would be equipped with dual pressure relief valves that, if activated, would discharge methane into the atmosphere at a distance above the tank where it would be expected to readily dissipate. LNG would be transported once or twice per day over county roads to industrial and heavy vehicle customers. LNG pick-ups would be scheduled to avoid school bus traffic and mine shift changes. Figure 3.4 is a conceptual diagram showing the proposed project on the Parrish Shaft.

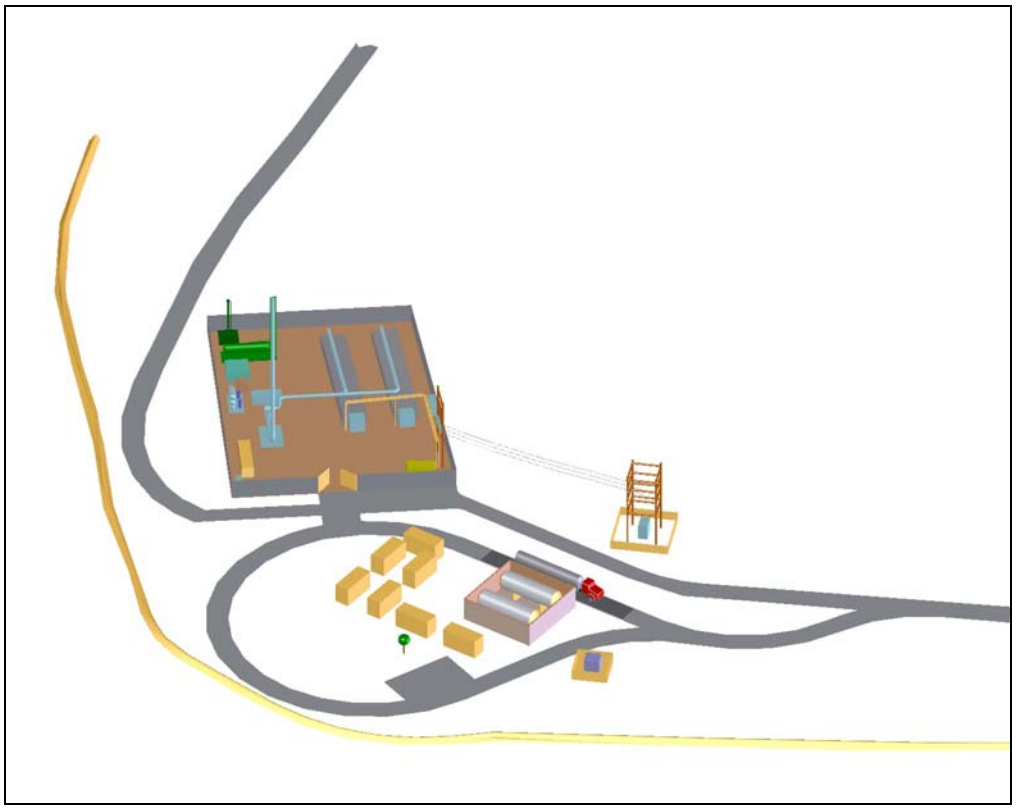

Figure 3.4: Rendering Showing the Proposed Project (foreground) on the Parrish Shaft Site

3.3 Project Schedule

The proposed project would be expected to last up to48 months including final engineering design work and the environmental review, which includes the preparation of this EA. The demonstration phase of the project, which would include full operation of the project as described earlier in this section, would be expected to last 36 months. Site preparation would involve standard work practices such as installation of a chain link fence and pouring of concrete pads beneath certain equipment. Installation of the methane processing and LNG generation equipment will be necessary as well as installation of the LNG storage tanks. DOE anticipates that the project could begin initial operations within 6 months of a decision to proceed.

DOE anticipates that the demonstration phase of the project would begin in 2006. Following completion of the demonstration phase of the project, the project would either be discontinued or converted to commercial operations by the Industrial Participant. If discontinued, the Industrial Participant would submit a site restoration plan to DOE for approval, and the installed equipment would be dismantled and removed and either reused - in whole or in part - at another location operated by the Industrial Participant or sold for salvage value. The site would be turned back over to the lessee, Northwest Fuel. DOE anticipates that site restoration work would be completed within 120 days of approval of the site restoration plan.

3.4 Alternatives to the Proposed Project

The solicitation (DE-PS26-00NT 40767) which resulted in the selection of the proposed project for consideration for partial funding by DOE was restricted to five firms which had participated in Phase I (feasibility study) and Phase II (conceptual design and analysis) efforts conducted under previous Government contracts. The solicitation called for responding firms to use data results obtained from their respective Phase I and Phase II efforts to propose a pilot-scale project demonstrating the technology and design of their earlier efforts. The objective of the solicitation and projects selected was to reduce methane emissions associated with underground mining operations by conducting a pilot-scale field demonstration of existing technologies for capturing, recovering, and utilizing coal mine methane from mine operations. As part of the evaluation criteria used in selecting the successful proposal, offerors were required to demonstrate a commitment from a coal mine owner for utilization or recovery of the coal mine methane.

DOE's participation in the proposed project is limited to partial funding of the project proposed by private industry. Because of DOE's limited funding role in the proposed project (financial assistance for less than 50% of the estimated cost of the LNG from Coal Mine Methane for Industrial and Transportation Applications project), and due to the absence of a decision-making role other than a decision to act on a proposal from private industry for a defined project at a specific location, alternatives to be considered

in the EA are limited to the No Action alternative and minor design alternatives[3].

3.4.1 No Action

Under the No Action alternative, DOE would not provide partial funding for the installation and operation of the Integrated LNG Production System at EACC's Parrish Shaft site. In the absence of DOE funding, Appalachian-Pacific or a successor could continue with its plans to construct and operate the project subject to all applicable regulations and permits. Under this case, the environmental changes resulting from the project would be expected to be the same as those identified and analyzed in Section 4 of this EA. It is more likely, however, that the action in the absence of DOE's funding is that the plans for the LNG Production System would be discontinued and the waste methane would either continue to be used by Northwest Fuel for power generation or would be vented to the atmosphere. Venting of 900,000 cubic feet of methane per day over the three-year life of the project would be the greenhouse gas equivalent of 376,000 metric tons of CO_2 released to the atmosphere.

Should the Industrial Participant decide to proceed with the project in the absence of DOE funding, noise arising from the project could be greater than with DOE's participation. Appalachian-Pacific and Northwest Fuel have contractually agreed to work to keep the noise attributable from their combined projects to the levels applicable to the original project at the Parrish Shaft site (NTE 51.9 dBA L_{dn}). As neither West Virginia nor Monongalia County have enacted noise control ordinances, in the absence of DOE's participation, noise abatement measures would be at the discretion of the Industrial Participant or the site owner unless or until a legal judgment necessitated noise abatement.

3.4.2 Production Instead of Purchasing Electricity

The project as initially proposed by Appalachian-Pacific would require the purchase of one MW of electric power from Allegheny Power. Instead of purchasing electricity from Allegheny Power, Appalachian-Pacific could install an on-site electric generator rated from 2.5-4.0 MW to produce the needed electricity. An electric generator would most likely be fired on natural gas, but could be fired on gasoline or

---

[3] The issue of the range of reasonable alternatives to be considered within an EA or EIS, when a government agency is merely the grantor of a permit or financial assistance, has been addressed by various federal appeal courts. For example, the Court of Appeals for the Ninth Circuit (see, e.g., City of Angoon et al. v. Hodel, 803 F.2d 1016 (1986); The Alliance for the Wild Rockies, Inc. et al. v. United States Forest Service, 1996 U.S. App. LEXIS 11591) has stated that when reviewing the number and range of reasonable alternatives examined within an EIS, deference is given to the federal agency. Applying the Administrative Procedure Act, the court will look to see that the agency decision was not arbitrary, capricious, an abuse of discretion or otherwise inconsistent with the law. Applying NEPA, the court will look to see that the range of alternatives fostered NEPA's policies of informed decision-making and informed public participation. Moreover, the Ninth Circuit has said that the range of reasonable alternatives is determined by the nature and scope of the proposed federal action. It does not include alternatives that appear infeasible, ineffective, or inconsistent with the basic policy objectives of the government program. In general, courts have allowed a more narrow range of alternatives when a private entity applies or petitions for some type of grant (e.g., a permit).

diesel fuel. The latter options would require on-site fuel storage increasing the risk of an environmental release. Regardless of fuel type, an on-site generator would be an added source of workplace and community noise.

Electricity is readily available from the local utility, and the additional demand would not unduly burden existing capacity or negatively impact the provider's ability to meet local demand. Either alternative (i.e., purchasing power or generating it on-site) is environmentally acceptable.

3.4.3 Stationary Versus Portable LNG Storage and Storage Configuration

Appalachian-Pacific's proposed project would involve the production of up to 10,000 gallons per day of LNG. LNG produced would be stored on-site and transported daily over public roads and highways to heavy transportation end users. The frequency of trips required to transport the product to market would depend on consumer demand and the on-site storage capacity. Appalachian-Pacific proposed to store up to 30,000 gallons (approximately 3-days production) on-site. This would provide some flexibility in scheduling trucks and would allow production to continue over a weekend. Sufficient storage capacity could be met using either stationary containers or portable containers. Portable containers are generally smaller than stationary containers. Using portable containers could require more truck trips to remove the LNG, but could reduce the risk on a worse-case accidental release of LNG. Using a stationary container could reduce the number of truck trips, but could pose a greater risk under a worse-case accidental release depending on the size and orientation (horizontal or vertical) of the container.

A single vertical container with the capacity to hold 30,000 gallons of LNG would measure approximately 45 feet high and have a diameter of approximately 15 feet. A vertical tank of these dimensions would require a more substantial foundation necessitating deeper excavations for footers. Additionally, following NFPA 59A guidelines for spill containment, a vertical tank would require a larger containment area than the same tank in a horizontal configuration. This is because the distance between the inner wall of the storage vessel and the inside wall of the containment structure cannot be less than the vertical distance between the top of the containment barrier and the maximum height of the fluid in the tank. This is to ensure that under a rapid release scenario the moving fluid would not swash over the top of the containment barrier.

A vertical tank 45 feet in height filled to 90% capacity would have a fluid height of approximately 40 feet. For a containment barrier 5 feet high, the minimal distance between the inside wall of the tank and the inner side of the containment barrier would have to be not less than 35 feet (40 ft minus 5 feet) for all four sides of the containment structure. Allowing for a tank wall thickness of 0.5 feet, the minimal linear dimension of the containment structure would have to be 84 feet (2 x 35 feet plus 14 feet). This would give a minimal containment area of 7,056 square feet.

NETL conducted off-site consequence analysis using RMPcomp, EPA's Risk Management Planning model for off-site consequence screening, for a worse-case release

from this vertical tank configuration. The results, shown in figure 3.5, indicate that effects of a worse-case release would extend for approximately 0.2 miles, which would extend beyond the EACC property line and could reach the nearest resident. The worse-case off-site consequence for a methane release under EPA screening guidelines would be an air explosion of a flammable methane-air mixture with overpressure of 1 psi. Because of the potential for increased risk, Appalachian-Pacific is not considering a vertical tank configuration.

In its liquid state LNG itself is neither flammable nor explosive (FERC, 2004). Additionally, LNG tanks store LNG at extremely low temperatures and a modest storage pressure is required to maintain the material in a liquid state. A release of LNG would be expected to vaporize and dissipate as the methane warms to ambient temperatures. Initially, the gas would be colder and therefore heavier than the surrounding air and would travel towards the ground. As the methane warms further, it would become less dense than ambient air and would rise. Methane is flammable in air only within a range of 5% to 15%. A methane-air mixture containing less than 5% methane is too lean to burn, and a methane-air mixture containing more than 15% methane is to rich to burn. In the event of a release of LNG, the resulting vapor cloud would include areas within the flammable limits for methane. The location and extent of these combustible zones would depend on a number of factors including the amount of LNG released, the duration of the release, and the ambient temperature and wind conditions at the time of the release.

RMP*Comp Ver. 1.07
Results of Consequence Analysis for Vertical Tank Configuration

Chemical: Methane
CAS #: 74-82-8
Category: Flammable Gas
Scenario: Worst-case
Liquefied by: refrigeration
Quantity Released: 93,000 pounds
Release Type: Vapor Cloud Explosion
Mitigation Measures:
Diked area: 7,056 square feet
Dike height: 8 feet

Release Rate to Outside Air: 1,480 pounds per minute
Quantity Evaporated in 10 Minutes: 14,800 pounds
Estimated Distance to 1 psi overpressure: 0.2 miles (0.3 kilometers)

--------**Assumptions About This Scenario**---------
Wind Speed: 1.5 meters/second (3.4 miles/hour)
Stability Class: F
A**ir Temperature:** 77 degrees F (25 degrees C)

Figure 3.5: Worst-case Consequence Analysis for Vertical Tank Alternative

4.0 Affected Environment and the Environmental Consequences of the Proposed Action

4.1 Approach

Section 4.0 of the Environmental Assessment describes the environment which would be potentially affected by the proposed project, and discusses the potential impacts which may result. Beginning with Section 4.3, this section of the Environmental Assessment is organized by resource. Relevant aspects of the existing conditions for each resource are described followed by potential consequences of the proposed action on that resource. Emphasis is placed on the resources and consequences identified as potentially more significant during DOE's public scoping process. For resources not expected to be impacted by the proposed action or where consequences resulting from the proposed action would be expected to be *de minimis,* descriptions and discussions are less detailed.

4.2 Site Description

The proposed project would be located at the site of the Parrish Shaft of Eastern Associated Coal Corporation's (EACC) Federal Number 2 Mine in the Battelle District of western Monongalia County, West Virginia. The site was previously the location of the Miracle Run exhaust Fan for the Federal Number 2 mine. The site is currently used by Northwest Fuel for power generation. The access road to the site is off of County Route 13 approximately 0.4 miles from County Route 15. The proposed site is located approximately 2 ¼ miles southeast of Wadestown, WV in an unincorporated section of Monongalia County, and is situated in the south central section of the Wadestown, WV - PA USGS 7.5 minute topographic quadrangle.

The site for the proposed LNG facility is located in the Dunkard Creek watershed approximately 400 feet north of Right Branch Miracle Run. Right Branch Miracle Run flows predominantly north-northeast for over eight miles until it joins Miracle Run about five miles downstream from the project site. Miracle Run is one of six major tributaries of Dunkard Creek in western Monongalia County, WV. The Dunkard Creek watershed is a part of the larger Lower Monongahela River watershed.

4.3 Air Quality

The air quality section provides a general discussion of the air quality in the region and identifies and discusses potential impacts to air quality anticipated from the proposed project. The U.S. Environmental Protection Agency (EPA) has established National Ambient Air Quality Standards (NAAQS) for the following seven criteria pollutants: ozone (O_3), carbon monoxide (CO), nitrogen dioxide (NO_2), sulfur dioxide (SO_2), particulate matter of less than 10 micron size (PM_{10}), particulate matter of less

than 2.5 micron size ($PM_{2.5}$), and lead (Pb). The NAAQS are expressed as concentrations of the pollutant in ambient air. Table 4.1 lists the current standards established by EPA for the seven criteria pollutants. It should be noted that the NAAQS for particulate matter are derived from statistical data collected over a three year period. The $PM_{2.5}$ standard was promulgated in 1997. Implementation of this new standard was blocked by a civil suit filed by an industrial consortium. Currently the EPA is working with the states to reach agreements over which counties are in $PM_{2.5}$ attainment and which are not. State plans to implement $PM_{2.5}$ regulations are due to the EPA in February 2008. Consequently, the NAAQS for $PM_{2.5}$ is not enforceable at this time.

Pollutant			
Standard	**Value ***	**Standard**	**Type**
	Carbon Monoxide (CO)		
8-hour Average	9 ppm	(10 mg/m^3)	Primary
1-hour Average	35 ppm	(40 mg/m^3)	Primary
	Nitrogen Dioxide (NO_2)		
Annual Arithmetic Mean	0.053 ppm	(100 μg/m^3)	Primary & Secondary
	Ozone (O_3)		
1-hour Average	0.12 ppm	(235 μg/m^3)	Primary & Secondary
8-hour Average **	0.08 ppm	(157 μg/m^3)	Primary & Secondary
	Lead (Pb)		
Quarterly Average	1.5 μg/m^3		Primary & Secondary
	Particulate (PM 10)[1]		
Annual Arithmetic Mean	50 μg/m^3		Primary & Secondary
24-hour Average	150 μg/m^3		Primary & Secondary
	Particulate (PM 2.5)[2]		
Annual Arithmetic Mean **	15 μg/m^3		Primary & Secondary
24-hour Average **	65 μg/m^3		Primary & Secondary
	Sulfur Dioxide (SO_2)		
Annual Arithmetic Mean	0.03 ppm	(80 μg/m^3)	Primary
24-hour Average	0.14 ppm	(365 μg/m^3)	Primary
3-hour Average	0.50 ppm	(1300 μg/m^3)	Secondary
Note: Values in parentheses are approximate equivalent concentrations			
[1] Particles with diameters of 10 micrometers or less			
[2] Particles with diameters of 2.5 micrometers or less			
** The PM 2.5 standards are included for information only and are not currently enforced.			

Table 4.1: National Ambient Air Quality Standards (NAAQS)

For each of the NAAQS for criteria pollutants, the EPA classifies regions within the states as either being in attainment or not being in attainment for each of the criteria pollutants mentioned above. Some regions for which insufficient data are available for accurate classification are listed as nonclassified. In response to the NAAQSs and the subsequent classification, each state is required to submit to the EPA for approval an implementation plan detailing the manner by which the state will achieve and maintain

the NAAQS within the state. The State Implementation Plan (SIP) submitted by West Virginia was initially approved by EPA in 1972 and has been subsequently revised as the air quality in areas initially not in attainment with one or more of the NAAQS has improved.

As a potential Federal co-sponsor of the proposed project, DOE would be required to prepare a conformity determination if the proposed project was located in a nonattainment area for any criteria pollutant. A conformity determination would also be required if the proposed project would be located in a maintenance area - an area in attainment but which was previously in nonattainment for any criteria pollutant and is striving to maintain attainment with one or more criteria pollutants pursuant to an approved SIP. The conformity determination assures that an agency of the Federal government does not undertake actions that would violate provisions of a State's approved implementation plan.

EPA has also established standards to comply with the Prevention of Significant Deterioration (PSD) of air quality as defined by the NAAQSs. The PSD standards provide a ceiling on allowable increases in concentration of pollutants in areas which are in attainment with all NAAQSs. PSD standards are applicable for major new emission sources as well as existing sources undergoing major modifications which would increase emissions of a regulated pollutant. PSD standards are expressed as allowable increments (increases) in the atmospheric concentration of regulated pollutants. One set of allowable increment exists for most of the United States. Certain areas within the United States are designated as Class I areas. These areas are defined under the Clean Air Act (42 USC 7472 Section 162) as international parks, national parks that exceed 6,000 acres or national memorial parks that exceed 5,000 acres in size. Allowable PSD increments currently exist for SO_2, NO_2, and PM_{10}, and the value of these increments for the state of West Virginia are shown in Table 4.2

		Allowable Increment ($\mu g/m^3$)	
Pollutant	**Averaging Time**	**Class I Area[1]**	**Class II Area[2]**
SO_2	3 hr (max)	25	512
	24 hr (max)	5	91
	Annual[3]	2	20
NO_2	Annual[3]	2.5	25
PM_{10}	24 hr (max)	8	30
	Annual[3]	4	17
[1] Special designated areas – including international parks, national parks over 6,000 acres, national wilderness areas over 5,000 acres.			
[2] Remainder of the United States			
[3] Arithmetic mean			

Table 4.2: Allowable PSD Increments

Because the allowable PSD increments are expressed as increases in atmospheric concentrations of regulated pollutants (for example, micrograms per cubic meter) and not

as emission rates (for example, tons per year), determining whether a proposed project would result in an exceedance of an allowable increment requires atmospheric modeling. To reduce the burden on industry while ensuring compliance with PSD increments, EPA allows states to designate smaller emission sources as “synthetic minor sources” under PSD regulations. Sources choosing to be regulated as synthetic minor sources agree to limit by permit their emissions of pollutants covered under PSD regulations to below the thresholds which trigger a New Source Review and applicability of PSD regulations.

In addition to the NAAQS, EPA regulates air quality by limiting toxic and other emissions from certain industrial segments. Under the Clean Air Act Amendments of 1990, EPA is required to regulate sources of 188 listed toxic air pollutants. (Note that this list originally referenced 189 pollutants, but EPA has subsequently removed the chemical caprolactum from the list.) On July 16, 1992, EPA published a list of industry groups (known as source categories) that emit one or more of these hazardous air pollutants. For listed categories of "major" sources (those that have the potential to emit 10 tons/year or more of a listed hazardous air pollutant (HAP) or 25 tons/year or more of a combination of HAPs), the Clean Air Act requires EPA to develop standards that are based on stringent air pollution controls, known as maximum achievable control technology (MACT). Oil and natural gas production and natural gas transmission and storage are source categories listed by EPA for regulation.

On June 17, 1999, EPA promulgated National Emission Standards for Hazardous Air Pollutants (NESHAP) for the oil and natural gas production industry. These NESHAP define the MACT for control of emissions from this industry. Consequently, this rule is sometimes referred to as the ONG (Oil and Natural Gas) MACT. In general terms, the rule requires controls on certain glycol dehydration units and condensate storage tanks, as well as equipment leaks at natural gas processing plants. The rules are applicable to major sources of hazardous air pollutants in the Oil and Natural Gas production industry. Glycol dehydration units that process less than 283 thousand m^3/day on an annual average are exempt from the MACT requirements.

4.3.1 Affected Environment

Monongalia County is classified as being in attainment for all currently enforced NAAQS. Sections of Monongalia County are in the process of being classified as nonattainment for $PM_{2.5}$; however this standard will not be implemented until after February 2008. Air quality within the state is regulated through the West Virginia Department of Environmental Protection (WVDEP) -Division of Air Quality (DAQ). For purposes of determining permit requirements under applicable state air regulations, the DAQ defines a major source as one having a potential to emit more than 100 tons per year of any regulated criteria pollutant. The proposed project is not expected to emit more than 100 tons per year of any regulated criteria pollutant and would be not be regulated as a major source under state air quality regulations (45CSR13).

No parts of Monongalia County are designated as a Class I area for purposes of determining the application of allowable PSD increments. Class II allowable PSD

increments for SO_2, NO_2, and PM_{10} would be applicable to the proposed project if the project met the thresholds as a "major source" under PSD regulations. The proposed project is not a major source and would not be regulated under PSD regulations.

4.3.2 Environmental Consequences

The proposed project would refine coal mine waste methane, removing impurities (such as water, oxygen, carbon dioxide, and nitrogen) from the methane stream and venting them through a stack. The proposed project would emit small quantities of NO_x, PM_{10}, and SO_x. Expected emissions of criteria pollutants are shown in Table 4.3. These pollutants would be emitted from the top of the stack and would be dispersed into the atmosphere. The proposed project would be expected to reduce the ambient concentration of regulated criteria pollutants by liquefying methane instead of the methane being combusted or vented to the atmosphere.

Criteria Pollutant	Permitted Emissions (tons/yr)
NO_x	<0.009
PM_{10}	<0.0007
SO_2	<0.000001
VOCs	<0.000001
CO	<0.008
Lead	None
Hazardous Air Pollutants (aggregate)	<0.000001

Table 4.3: Expected Emissions of Criteria Pollutants for the Proposed Project

Appalachian-Pacific filed with the West Virginia Department of Environmental Protection – Division of Air Quality (WVDEP-DAQ) for a determination of permit requirement. WVDEP-DAQ has determined that the proposed project would not require a state air permit as defined under 45CSR13. A copy of the letter of determination is included in Appendix A.

4.4 Water Quality

The water quality section provides a general discussion of the watershed basin and the potential impacts which would be anticipated for this project. Potential benefits are discussed qualitatively.

4.4.1 Affected Environment

The proposed main project site is located 200 feet north of Right Branch Miracle Run. Right Branch Miracle Run flows for over eight miles until it joins Miracle Run about five miles downstream from the project site. Miracle Run is one of six major tributaries of Dunkard Creek in western Monongalia County, WV. The Dunkard Creek

watershed is part of the larger Lower Monongahela River watershed, identified by United States Geological Survey (USGS) Cataloging Unit Number 05020005.

The Clean Water Act requires states to produce lists of water bodies that have water quality problems limiting the designated uses of those water bodies. Dunkard Creek has been listed as a water quality impaired stream on the West Virginia 303(d) Lists for 1996, 1998 and 2004. The pollutants of concern are metals resulting from acid mine drainage. Acid mine drainage can contribute high levels of metals, such as iron and aluminum, which are detrimental to aquatic life. States are also required to develop a Total Maximum Daily Load (TMDL) for each listed water body. TMDLs analyze existing pollutant inputs from all sources and tributaries in the watershed and determine the amount of each pollutant that can be assimilated by a water body without compromising water quality standards and associated designated uses. The TMDL process is a planning tool to develop pollution reduction goals that will improve impaired waters to meet water quality standards. At this time, a TMDL has not been developed for the Dunkard Creek watershed. Dunkard Creek is listed as a medium priority by the WV Department of Environmental Protection. Higher priority watersheds are being addressed at this time. Dunkard Creek's projected TMDL establishment year is no later than 2008.

4.4.2 Environmental Consequences

There would be no on-site water source for this project. A modest amount of water would be produced or used during normal operation of the project.

Normal maintenance activities would be performed on project equipment. These activities would include the periodic change out of lubricants - including oil and grease. Unexpected equipment breakdown could also occur. Depending on the nature of the equipment failure, oil, grease or mixed gas refrigerants (as opposed to chloro-flouro hydrocarbons) could escape from fluid reservoirs. Regular inspection of the equipment would be performed to identity potential failures. Routine maintenance would be performed and spill control measures (sorbent spill pads and socks) would be used to contain and cleanup any incidental nuisance spills.

There are no wastewater facilities available at this small rural project site. Area homeowners use septic systems for disposal of domestic wastewater. Portable restroom facilities would be rented by Appalachian-Pacific. No permanent restroom facilities would be constructed at the project site.

Given the small amount of wastewater generated by this project and the plans to collect and properly dispose of the wastewater offsite, no impacts to water quality from wastewater discharge are expected. Therefore, no impacts on the water quality of Miracle Run or the Dunkard Creek watershed are anticipated.

4.5 Socioeconomic Resources

Socioeconomic resources include the general sociological and economic climate in the area of the proposed project. It includes employment considerations, such as the availability of trained workers and demands placed on the local workforce, impacts to the tax base, and population demographics. Other factors include demands for and the availability of supporting infrastructure such as educational, recreational, and childcare services.

4.5.1 Affected Environment

Monongalia County has a population (Census 2000) of 81,866. This is an increase of 8.4 percent from the 1990 population. Over the same time period, the population of the state as a whole rose by only 0.8 percent. The County includes only five incorporated municipalities; all but one (Blacksville) are located in the central district of the County. The unemployment rate in Monongalia County (2003) of 3.2 percent compares favorably to the unemployment rate of 6.1 percent for the state as a whole (Monongalia County Planning Commission, 2004). The median household income for County residents was $28,625 based on 1999 data, only slightly lower than the state's median household income of $29,696 based on 1999 data (Census 2000).

Western Monongalia County is largely unincorporated. The town of Blacksville, located approximately 6.5 miles northeast of the proposed project, experienced a decline in population in the decades of the seventies and eighties. The decline stabilized somewhat in the mid-nineties, but continued with an estimated population of 157 in 1999. However, 2000 census data indicated an increase to 175 in 2000.

4.5.2 Environmental Consequences

The proposed project would have no permanent on-site workforce, and the workers employed would not be significant compared to the total non-farm employment base of over 45,910 in 2003 for the County as a whole (Monongalia County Planning Commission, 2004). With no permanent workforce or sizable transient workforce, the proposed project would not be expected to increase the school-aged population or have any adverse impacts to local educational or recreational resources. Some minor increase to the tax base due to installation and operation of the proposed project may occur, but would be minor when compared to the existing County tax base.

4.6 Safety and Health

Safety and Health pertains both to the workforce that would be employed in the installation and operation of the proposed project and to the public at large. The workforce would include any transient workforce involved in installation as well as the permanent workforce employed in the operation of the LNG generation facility and those employed to transport the LNG offsite. Personnel servicing the installation and operation

phases of the proposed project - such as those making deliveries to the site, are also considered within the resource of Safety and Health.

The proposed project would also utilize coal mine waste methane, which is a flammable gas. The gas would be transported to the gas processing area through a pre-existing gas pipeline routed underground except for a small section where the line passes under County Route 13 and crosses over the Right Branch Miracle Run. After the aerial stream crossing, the pipeline continues underground across the Parrish Shaft site to the LNG generation facility on the northwest portion of the site. As part of the scoping process, DOE identified for further analysis the possibility of accidental release of methane from the pipeline. This issue is analyzed in this section of the EA.

When natural gas is cooled to approximately -260°F, it condenses into a liquid, LNG. During the liquefaction process, oxygen, carbon dioxide, sulfur compounds, and water are removed from the natural gas. For waste coalmine methane, which is a mixture of coalmine methane and ventilation air introduced during mining operations, nitrogen must also be removed. The resulting liquid, LNG, is composed primarily (typically at least 90%) of methane, a flammable gas. The resulting liquid however, is nonflammable, and poses a significantly lower fire risk than other commonly used hydrocarbon fuels such as gasoline and propane. LNG is also colorless, odorless, non-corrosive, and non-toxic. LNG must be stored at extremely low temperatures. If allowed to come into contact with ambient temperatures, the super-cooled liquid will heat up and will volatilize back to its gaseous state. The volatilization can be gradual or sudden, as would be expected should LNG be released and come into contact with land or surface waters.

The proposed project will create approximately 10,000 gallons of LNG per day and will have the capability of storing up to 30,000 gallons of LNG. LNG would be transported once or twice per day over public roads and highways. As part of the scoping process, the DOE identified for further analysis the possible release of LNG from storage or during transportation. These issues are analyzed in this section of the EA.

4.6.1 Affected Environment

Emergency services are provided throughout Monongalia County by a central dispatch - Monongalia Emergency Centralized Communication Agency (MECCA 911). The western part of the County is serviced by a local volunteer fire department - the Clay Battelle VFD and by the Monongalia Sheriff's Department and the Morgantown Detachment of the West Virginia State Police. The area is served by two hospitals located in Morgantown, the county seat, approximately 30 minutes driving time by road. The hospitals include a Level 1 trauma center.

The proposed project includes activities that could present potential safety and health hazards to personnel performing work at the site. It is understood that employees will not be at the site on a permanent basis. However, servicing and maintenance of the LNG production facility at the site and transportation of LNG offsite would require periodic visits. For operational activities, US Department of Labor, Occupational Safety

and Health Administration (OSHA) requirements would be in effect. These standards are published as 29 Code of Federal Regulations (CFR), Part 1910, "Occupational Safety and Health Standards". Appalachian-Pacific would be responsible for compliance with OSHA's 29 CFR 1910 and 29 CFR 1926 requirements.

4.6.2 Environmental Consequences

Noise exposure is regulated by OSHA in 29 CFR 1910.95, "Occupational Noise Exposure". Noise is defined as unwanted sound. Occupational noise exposure has been demonstrated to cause short and long-term hearing loss to exposed employees. OSHA has established that employees may be exposed to no more that 90 decibels measured on an A-scale (dBA) averaged over the course of an 8 hour shift. The time weighted average exposure of 90 dBA is referred to as the "Permissible Exposure Limit". If any employee is exposed to a noise level of 85 dBA averaged over the course of an 8-hour shift, the employer is required to implement a comprehensive hearing conservation program. The time weighted average exposure of 85 dBA is referred to as the "Action Level".

Noise issues are not anticipated to be a concern based on noise generated by Appalachian-Pacific. The primary noise sources from the proposed project would be the gas feed compressor, a CompAir® L series oil-injected, rotary screw 150 kW compressor. The refrigeration compressor, also a CompAir® series L oil-injected, rotary screw compressor, would be slightly larger. The L-series compressors from CompAir are insulated to reduce sound emissions. Literature from the manufacture indicates that noise output from each of these compressors would be less than 80 dBA. The combined noise output from both compressors would be less than 83dBA, which is below the level at which OSHA would require a hearing conservation program.

It is anticipated that Northwest Fuel will continue to operate a number of generator engine sets (gensets) concurrent with the proposed Appalachian-Pacific project. The gensets would be a potential source of noise, which was analyzed in the EA previously prepared for that project (DOE , 2002). Due to the proximity of the proposed project to the Northwest Fuel project, Appalachian-Pacific personnel could be exposed to noise when working close to the fence line adjacent to the Northwest Fuel project. Appalachian-Pacific would need to measure the noise during construction to ensure that employees are not exposed to noise levels in excess of OSHA thresholds. Properly calibrated sound level meter would be required to evaluate actual noise levels encountered. In order to determine actual employee noise exposures, personal dosimetry with calibrated noise dosimeters would need to be performed on employees performing work in the area. Employees would be more likely to be exposed to high noise levels during construction of the proposed project during which employees would be in the proximity of the operating Northwest Fuel for longer periods of time.

In the event of employee exposures above the time weighted Action Level of 85 dBA, Appalachian-Pacific would be required to institute a Hearing Conservation Program with the following elements:

Implementation of a monitoring program, including area monitoring and personal monitoring for employees.

Establishment of an audiometric testing program. This includes performing a baseline and periodic audiograms in accordance with 29 CFR 1910.95, paragraphs (g) and (h).

Making hearing protection devices readily available to employees in the program. The Industrial Partner would be required to provide training on the proper fit, use, and care of the devices in accordance with 29 CFR 1910.95, paragraphs (i) and (j).

Providing training to all employees in the program in accordance with 29 CFR 1910.95, paragraph (k). Among the topics required in this training are the effects of noise on hearing; and the purpose and proper use of hearing protection devices.

Establishment of recordkeeping as required in 29 CFR 1910.95, paragraph (m). Records are required to be kept on noise measurements, exposure assessments, and audiometric testing.

During servicing activities for the methane processing, LNG generation, or associated equipment, OSHA's electrical safety requirements may be relevant. The following sections would be in effect when dealing with live electrical equipment:

29 CFR 1910.302 - "Electrical Utilization Systems"

29 CFR 1910.303 - "General Requirements"

29 CFR 1910.333 - "Selection and Use of Work Practices"

29 CFR 1910.334 - "Use of Equipment"

29 CFR 1910.335 - "Safeguards for Personnel Protection"

OSHA requires all employers using hazardous chemicals to establish a Hazard Communication Program if hazardous materials are present on site. OSHA's definition of hazardous materials includes such items as flammable substances, toxic materials, carcinogens (cancer causing substances) corrosive materials, irritants, and oxidizers. 29 CFR 1910.1200 paragraph (d) details what factors determine if a chemical is hazardous. OSHA requires the following elements in 29 CFR 1910.1200:

A written Hazard Communication Plan which describes how the employer will comply with the various sections of the Hazard Communication Standard. Requirements for the plan are listed in 29 CFR 1910.1200, paragraph (e).

The maintenance of material safety data sheets (MSDSs) for all hazardous chemicals used or stored at the site. MSDS requirements are outlined in 29 CFR 1910.1200, paragraph (g).

Proper labeling of all hazardous chemicals at the work site. At a minimum, hazardous substance containers would be required to be labeled as to their contents, health and physical hazards posed by the contents, and the name/phone number/address of the manufacturer or distributor. Labeling requirements are detailed in 29 CFR 1910.1200, paragraph (f).

A Hazard Communication training program. Employees would be required to be trained on the identity of hazardous substances on the worksite, hazards posed by these substances, protective measures which can be used to protect employees against these hazards, methods of detecting the presence of these hazardous substances, employee rights under the Hazard Communication Standard, and details of the Industrial Partner's written Hazard Communication Plan. Training requirements are detailed in 29 CFR 1910.1200, paragraph (h).

A maintained list of all hazardous substances present at the worksite would also be required.

Installation activities at the Parrish Shaft site may involve several OSHA standards. Construction activities are covered by 29 CFR 1926, "Safety and Health Requirements for Construction".

Concrete operations would be required to pour the footings for some equipment. The Industrial Partner would be required to follow 29 CFR 1926, Subpart Q, "Concrete and Masonry Construction".

General personal protective equipment requirements for construction activities, including head, foot, and eye protection, are covered in Subpart E, "Personal Protective and Life Saving Equipment".

Application of regulatory requirements under OSHA would be expected to provide adequate worker safety, and safety and health services are available in the County. The proposed project would not be expected to adversely impact the safety and health of the local workforce.

The National Fire Protection Association (NFPA) produces industry standards regarding fire, electrical, and building safety. NFPA 59A, the "Standard for the Production, Storage, and Handling of Liquefied Natural Gas (LNG)" outlines site selection, design, construction, and fire prevention and protection at LNG facilities. Appalachian-Pacific would be using ASME approved containers and would therefore be regulated under Chapter 10 of NFPA 59A, "Alternate Requirements for Stationary Applications Using ASME Containers."

General requirements such as provisions for spill retention, site accessibility to emergency vehicles, secure storage of equipment, posting of instructions and emergency controls, lighting, and specifications for pressure-containing

components are presented in Section 10.2.

Section 10.3, titled "Containers," covers design, construction, and operation of tank walls, piping, insulation, supports.

Section 10.4 discusses container filling and 10.5 provides more details regarding container foundations and supports.

Container installation, including required distances between containers and minimum distances from container impoundment, drainage system, or transfer points to buildings and property lines, is covered in Section 10.6. Also discussed in this section is the requirement to not locate LNG tanks or equipment anywhere at risk of failure of overhead electric lines operating over 600 volts.

Section 10.7 discusses product retention valve requirements and Section 10.8 covers LNG spill containment requirements.

Inspection and LNG container testing are covered in Sections 10.9 and 10.10 respectively.

Piping requirements are discussed in more detail in Section 10.11 and container instrumentation is covered in Section 10.12.

Fire protection and safety is covered in Section 10.13 and "covers equipment and procedures designed to minimize the consequences from released LNG, flammable refrigerants, flammable liquids, and flammable gases." Section 10.13 requires an evaluation to determine the extent of fire protection as per Section 9.1.2. Emergency shutdown system requirements and operation are presented in Section 10.13 as well as fire and leak control, fire protection water systems, fire extinguishing and other fire control equipment, maintenance of fire protection equipment, and personnel safety.

Section 10.14 requires portable flammable gas detectors to be readily available.

Section 10.15 covers operations and maintenance including: basic requirements, required establishment and documentation of operating procedures, maintenance requirements, and required training.

LNG will be produced and stored at approximately -260 ^{o}F. The potential for exposure to extreme temperatures produces additional worker safety concerns. To mitigate this concern, the following protective equipment will be required during fuel transfer operations: face shield, hard hat, arm length insulated gloves with overlapping coat sleeves, safety shoes/ boots with rubber soles and overlapping trousers, and an apron. Industry standard cryogenic liquid handling procedures will be followed as described in LNG Technicians Manual which was developed by West Virginia University under contract to Appalachian-Pacific. Technicians will be certified by

successfully completing a cryogenic liquids handling course at an industry source such as the Gas Technology Institute. In addition, all visitors to the site would be given a short safety training briefing.

The proposed project would gather at least 1,500 MCFD of coal mine gas having a methane content of between 50 and 61% through the pipelines from the ventilation boreholes or other wells at the Parrish Shaft site. Methane is a flammable gas, and mixture of methane and air can burn if the methane concentration is between 5.3% and 15%. If the methane concentration in air is below 5.3%, the mixture is too lean to ignite or sustain combustion. If the methane concentration in air is above 15%, the mixture is too rich. The limits are respectively referred to as the lower and upper limits of flammability, or the Lower Explosive Limit (LEL) and Upper Explosive Limit (UEL).

Coal mine gas would be provided to the proposed project by Northwest Fuel. Gathering lines operated by Northwest Fuel using suction blowers. Under normal operations, the methane would not be expected to be released even if the gathering lines would be breached. In the event of a failure of Northwest Fuel's collection blowers, which provide the vacuum to the pipeline, gas pressure in the gathering lines could stabilize to the approximate reservoir pressure (the gas pressure in the coal mine) adjusted by the hydrostatic head and any pipe friction loss.. Under this scenario and with the simultaneous breach of one or more gathering lines, mine methane may be released to the atmosphere at the point where the gathering line was breached if the atmospheric pressure is less than the coal mine gas reservoir pressure adjusted by the hydrostatic head and any pipe friction loss.

NETL analyzed the risk of the release of mine methane to atmosphere using an emergency response model developed by the Federal Emergency Management Agency (FEMA, 1988) in a previous environmental assessment prepared for the Northwest Fuel project (DOE, 2002). Under the very unlikely dual failure scenario (that is, the collection blower fails allowing the gathering line pressure to rise to reservoir pressure and the gathering line breaches at a point where it crosses the Right Branch Miracle Run) and the condition where reservoir pressure is higher than atmospheric pressure, methane may be released to atmosphere. NETL used a model known as ARCHIE (Automated Resource for Chemical Hazard Incident Evaluation) to evaluate the potential for buildup of explosive concentrations of methane at or near ground level.

The scenario modeled assumed a convergence of worst case conditions such as a full breach of the gathering line, stable atmospheric conditions, and a release extending for 10 hours, such as might occur overnight. The results of the evaluation indicate that a flammable mixture could occur within the immediate vicinity (~ 35 ft) of the breach, but would not extend offsite. Additionally, the total amount of methane within the area above the LEL would be approximately 11 lbs. Unconfined mixtures of flammable gas and air generally will not explode if the total amount of flammable gas in the atmosphere is less than 1000 lbs. The methane and air mixture that could result from the accidental release scenario evaluated would not be expected to be an explosion hazard to either workers onsite or to nearby residents.

The proposed project would result in the production and on-site storage of LNG. Total on-site storage capacity would be 30,000 gallons. The most likely storage array would be a single, 30,000 gallon tank, which would be located toward the front of the Northwest Fuel project just outside the southwest corner of the fence line. LNG weighs approximately 3.7 lbs/gallon, so 30,000 gallons of LNG represents 111,000 pounds of methane. Methane is a flammable gas. Quantities of methane in excess of 10,000 pounds would trigger OSHA's process safety management (PSM) regulations, codified at 29 CFR 1910.119, as well as EPA's provisions for Chemical Accident Prevention codified at 40 CFR 68, which include requirements to prepare a Risk Management Plan and conduct worse-case offsite consequence analysis. Prometheus Energy, which is designing the proposed LNG conversion plant for Appalachian-Pacific, incorporates OSHA's PSM program as part of its training program for key engineering employees and for field engineers who install and commission purifier/liquefier plants as well as for operations and maintenance staff who monitor and routinely service such plants. Prometheus also has in place OSHA PSM program documentation for an LNG plant similar to the one being proposed by Appalachian-Pacific. This experience with the OSHA PSM program requirements and the relevant operating experience at other LNG plants should provide a strong base for meeting OSHA PSM requirements for the proposed project.

NETL conducted a screening assessment of the unlikely event of the catastrophic breach of the storage tank and the rapid release of the full contents of the storage tank. The model used was RMPcomp, available from EPA's Chemical Emergency Preparedness and Prevention Office. To comply with the requirements of NFPA 59A, storage tanks holding LNG must be equipped with passive spill containment structures with sufficient volume to contain the entire contents of the storage tank with sufficient excess capacity to contain the surge resulting from the instantaneous release of fluid. Under the worst-case scenario, the entire contents of the storage tank were assumed to instantaneously leak into the containment area. Vaporization of the LNG would begin almost instantly and would continue at a rate controlled by ambient temperatures and the surface area of the containment basin, which was estimated at 525 square feet based on a 7-foot high dike. The resulting vapor cloud was assumed to ignite resulting in a shock wave. The endpoint of the shock wave is defined as the farthest limit of an overpressure of 1 pound per square inch (psi).

The results of the consequence analysis, which are presented in Figure 4.1, predict that the potential impact of such a worst- case release with a resulting vapor cloud ignition would not extend to the nearest residents. The potential for methane from an accidental release of LNG to the containment area to result in a vapor cloud explosion is low. The vapor would be unconfined, and LNG vapor (methane) is not explosive in an unconfined environment (FERC, 2005). As LNG vapor warms above -160° F it becomes lighter than air and will rise and disperse rather than collect near the ground (FERC, 2005a). Additionally, natural gas vapors do not burn rapidly like gasoline. Rather, natural gas vapors form a slow burning flame that burns back to the source of the natural gas vapor (Shell-USGP, 2005).

LNG produced by the proposed project would be transported from the site via tanker truck once or twice per day. The tanker truck would use CR 13 followed by CR 15. Traffic counts were performed on CR 13 and CR 15 in 2002 by the West Virginia Department of Transportation. The Crossroads area of CR 13 had an average daily traffic (adt) of 300 vehicles and the section of CR 15 that runs from CR 13 to CR 7 had an adt of 700 vehicles. According to the traffic counts, CR 13 and CR 15 are not heavily traveled roadways. A high traffic period occurs during a mine shift change at 2:00 to 2:30 pm, and Appalachian-Pacific has agreed to avoid transportation of LNG at this time to minimize traffic concerns. To the extent practicable, LNG transport will be scheduled during daylight hours (generally between 6:00 am and 6:00 pm). The industry participant has also agreed to avoid transportation of LNG when school buses are expected to be in the area. School bus schedules for the Crossroads area, as published by the Monongalia County Schools Transportation Department, are presented in Table 4.4.

```
                    RMP*Comp Ver. 1.07
              Results of Consequence Analysis

Chemical: Methane
CAS #: 74-82-8
Category: Flammable Gas
Scenario: Worst-case
Liquefied by refrigeration
Quantity Released: 93,000 pounds
Release Type: Vapor Cloud Explosion
Mitigation Measures:
Diked area: 625 square feet
Dike height: 7 feet
Release Rate to Outside Air: 131 pounds per minute
Quantity Evaporated in 10 Minutes: 1,310 pounds
Estimated Distance to 1 psi overpressure: 0.09 miles (.15 kilometers)

--------Assumptions About This Scenario---------
Wind Speed: 1.5 meters/second (3.4 miles/hour)
Stability Class: F
Air Temperature: 77 degrees F (25 degrees C)
-------------------------------------------------
```

Figure 4.1: Consequence Analysis of Worst-Case Release of LNG

	Pick Up Times	Drop Off Times
High School and Middle School	≈ 6:41–7:10 am	≈ 2:15- 2:40 pm
Elementary School	≈ 7:45-8:20 am	≈ 3:20-4:03 pm

Table 4.4: School Bus Schedules for Crossroads Area

In addition to avoiding periods of traffic concern, drivers will under all conditions use administrative controls while driving. LNG transportation vehicles will be properly tagged according to DOT transportation of hazardous materials regulations.

Access to the site is via a small gravel access driveway. This driveway enters County Road 13 at a sharp angle near the bottom of a slope (Figure 4.2). Drivers transporting LNG will be advised of the limited visibility. Additionally, flagmen or additional signage will be used, as necessary, to ensure that transport trucks enter and exit the site safely.

Based on the normal mitigation measures being taken, the limited traffic on the CR 13 and 15, avoiding transportation when school buses or mine shift change traffic are present, driver caution, and following of DOT transportation of hazardous materials regulations, LNG transportation is not expected to cause adverse impacts to the environment.

Figure 4.2: Access Road to the Proposed Site at the Junction with County Road 13

4.7 Floodplains and Wetlands

4.7.1 Affected Environment

The proposed main project site would consist of a graded area, approximately 70 by 80 feet. It would be located slightly up slope, approximately 200 feet north of Right Branch Miracle Run. The area has been previously disturbed by the prior surface support activities (exhaust fan, emergency hoistway) associated with deep mining in the area, construction of an electrical substation, the Northwest Fuel project, and associated access roads and parking area (Figure 4.3).

The site is located on a tract of land (Monongalia County Tax District 7, Map No. 18, parcel 17), a small portion of which is tentatively identified as being in a flood area. Monongalia County has promulgated floodplain management rules covering development areas subject to base (100 year) flooding. A 100 year flood is the flood water elevation that has a 1% chance of being equaled or exceeded in any given year. Because of the proximity of the proposed site to the Right Branch of Miracle Run and the identification on property records of the parcel as a flood area, NETL contacted the state National Flood Insurance

Figure 4.3: Photo of Proposed Project Site South of the Existing Northwest Fuel Location

Program Manager and was referred to the Monongalia County Coordinator for the floodplain management to ascertain whether the proposed site in located below 100-year flood elevation. The Right Branch of Miracle Run is shown on FIRM Panel number 540139 0050 B.

Based on information obtained from the Monongalia County Planning Commission, the proposed project site would be located in an area that has been tentatively identified as a special flood hazard area (Figure 4.4). Accordingly, Appalachian-Pacific consulted with the County Flood Plain Administrator and hired a local engineering firm to more accurately map the flood plain at the proposed site. The results of that detailed study confirmed that the proposed site would be outside of the flood plain.

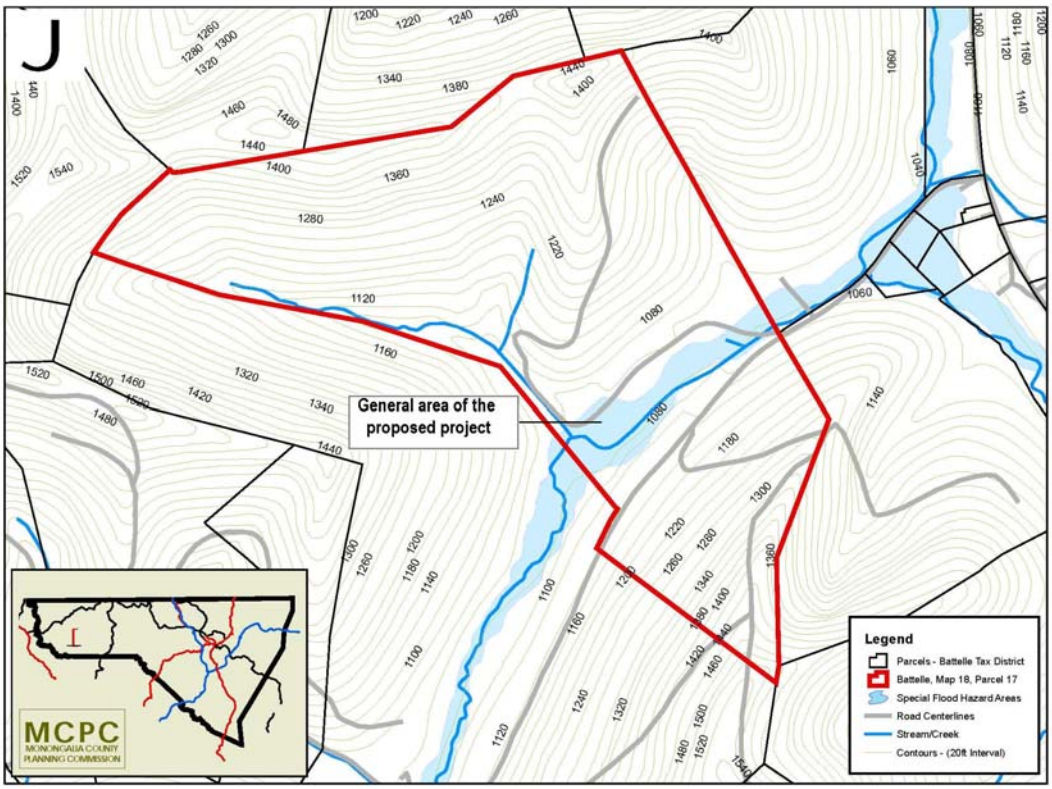

Figure 4.4: Flood Insurance Rate Map Panel Showing Right Branch of Miracle Run Stippled Pattern is Tentative Special Flood Hazard Area.

There is no outward sign of any obvious wetlands in the immediate vicinity of the project site. A 1987 U.S. Fish and Wildlife Service (USFWS) National Wetlands Inventory (NWI) map for the Wadestown, WV-PA quadrangle shows that no wetlands have been identified in the immediate project area. A small palustrine wetland with emergent aquatic vegetation (classified as PEM1C) occurs about 2,000 feet downstream from the project area. According to the National Wetlands Inventory, the classification PEM1C means the following:

P	=	palustrine (swampy)
EM	=	emergent vegetation (e.g., cattails)
1	=	persistent
C	=	seasonally flooded

This wetland is located approximately one half mile northeast of and on the other side of County Route 13 from the proposed project site.

4.7.2 Environmental Consequences

The main project area would be constructed at approximately 1,060 feet above sea level. This places the proposed project site just above the 100-year flood elevation. This determination is based on the Federal Emergency Management Agency′s Flood Insurance Rate Map (Community Panel Number 540139 0050 B; dated May 1, 1984) covering the project area. Appalachian-Pacific conducted an engineering study for the proposed site and provided the results to the Monongalia County Floodplain Administrator for review and concurrence. Correspondence received from the County Floodplain Administrator (included in Appendix B) concurs with the determination that the proposed project would not encroach on the 100-year floodplain.

There are no documented wetlands in the immediate area of the proposed project site. This is based on official U.S. Fish and Wildlife Service National Wetland Inventory maps (1987) and confirmed by a site visit. A small wetland located approximately 2,000 feet downstream of the proposed project site would not be affected by the project during either installation or operation.

4.8 Flora and Fauna

4.8.1 Affected Environment

The vast majority of land surrounding the proposed project site is composed of woodland and pasture. This agrees with the general dominance of woodland (60%) and pastureland (20%) in the Dunkard Creek watershed. The woodlands are typical temperate mesophytic (moderate moisture) forests, with mostly regenerated oak-hickory forests of pole to saw timber size. Existing stands in the area are composed of black oak (*Quercus velutina*), red oak (*Quercus rubra*), chestnut oak (*Quercus prinus*), white oak (*Quercus alba*), various hickories (*Carya* spp.), sugar maple (*Acer saccharum*), and yellow poplar (*Liriodendron tulipifera*). The forests on the adjacent hillsides have been disturbed by the placement of boreholes, power lines, and access roads associated with local coal mining activities.

The Dunkard Creek watershed offers good habitat for white-tailed deer (*Odocoileus virginianus*) and wild turkey (*Meleagris gallopavo silvestris*) resulting in large populations of big game animals. Populations of small game animals, including

cottontail rabbits *(Sylvilagus floridanus*), eastern gray squirrel (*Sciurus carolinensis*), and fox squirrels (*Sciurus niger*), are good, with fair numbers of ruffed grouse (*Bonasa umbellus*). The Dunkard Creek watershed is also home to a variety of raptors, passerines, waterfowl, nongame animals, reptiles and amphibians.

No Federally listed threatened or endangered species are known to occur in the Dunkard Creek watershed, and are therefore not expected to be found at the project site. Species of concern currently have no legal protection, may be in need of concentrated conservation actions, and could become candidates for future listing as more reliable data on their distribution becomes available. The area could be summer range for the Indiana bat (*Myotis sodalis*), but no sitings in Monongalia County have been documented. Dunkard Creek is home to two species of concern, the salamander mussel (*Simpsonaias ambigua*) and the snuffbox mussel (*Epioblasma triquetra*). However, these mussels are found in small to medium-sized rivers with good water quality and should not be found in the small tributary streams at the project site. The salamander mussel is only found where its host species, the common mudpuppy (*Necturus maculosus*), is located. Other species of concern found in Monongalia County that could be found around the project site include Bachman′s sparrow (*Aimophila aestivalis*), Butternut (white walnut; *Juglans cinerea*), and Barbara's buttons (*Marshallia mohrii*). However, these species have not been identified in the immediate project area and/or have not been reported in over ten years. Additional species of concern have been documented from other areas of Monongalia County that offer unique habitat not found at the project site.

4.8.2 Environmental Consequences

The proposed main project site would be located in a previously disturbed area between two hillsides, approximately 200 feet north of Right Branch Miracle Run. This area is mostly overgrown pastureland that was at one time woodland prior to disturbance by mine-related activities.

Since this project would be placed in a previously disturbed area, adverse impacts to fish, plant, or wildlife species from installation or operation of the proposed project would be minimal. There may be some avoidance of the immediate project area due to higher levels of human activity and associated noise. However, this should be localized and would diminish with time as installation activities are completed and animals acclimate to the project. Furthermore, no Federally listed threatened or endangered (T&E) species are known to occur in the immediate watershed. As part of its scoping process, DOE consulted with the U.S. Fish and Wildlife Service (USFWS). The USFWS has not identified any T&E species or critical habitat in the proposed project area. Letters of consultation and response are included in Appendix A of this EA.

4.9 Cultural and Historic Resources

The most comprehensive national policy on historic preservation was established by Congress with the passage of the National Historic Preservation Act of 1966 (NHPA).

In this act, historic preservation was defined to include "the protection, rehabilitation, restoration and reconstruction of districts, sites, buildings, structures, and objects significant in American history, architecture, archaeology, or culture." The act led to the creation of the National Register of Historic Places, a file of cultural resources of national, regional, state, and local significance maintained by the National Park Service (NPS) of the Department of the Interior (DOI). The act also established the Advisory Council on Historic Preservation (the Council), an independent federal agency responsible for administering the protective provisions of the act.

In general, the major provisions of the NHPA which must be addressed by DOE are Sections 106 and 110. Both Sections aim to ensure that historic properties are appropriately considered in planning federal initiatives and actions. Section 106 is a specific, issue-related mandate to which federal agencies must adhere. It is a reactive mechanism that is driven by a federal action. Section 106 requires that the head of any federal agency having direct or indirect jurisdiction over a proposed federal or federally assisted undertaking in any state, and the head of any federal department or independent agency having authority to license any such undertaking must ensure that the provisions of the NHPA are administered. Section 106 also mandates consultation during such federal actions. It compels federal agencies to "take into account" the effect of their projects on historical and archaeological resources and to give the Council the opportunity to comment on such effects.

Section 110, in contrast, sets out broad federal agency responsibilities with respect to historic properties. It is a proactive mechanism with emphasis on ongoing management of historic preservation sites and activities at federal facilities. Section 110(a) of the NHPA and Executive Order (E.O.) 11593 (which was substantially incorporated into the NHPA amendments of 1980) require agencies to provide leadership in preserving, restoring, and maintaining the historic and cultural environment of the nation. The 1980 NHPA amendments expanded the NHPA of 1966 by making federal agencies responsible for identifying, preserving, and nominating to DOI all sites, buildings, districts, and objects under their jurisdiction or control that appear to qualify for listing on the National Register of Historic Places.

The proposed action under review in this Environmental Assessment would be entirely located on property that is not within the control or jurisdiction of the DOE. Therefore, Section 110 would not apply to the proposed project. Under Section 106, DOE must determine whether or not the proposed action would involve historic properties as defined by the National Park Service guidelines and seek the consensus of the SHPO regarding those historic properties and potential impacts thereto.

4.9.1 Affected Environment

Monongalia County was one of the first three counties formed within the State. It was created in October of 1776 by an act of the Virginia General Assembly from parts of the District of West Augusta. It was named for the Monongahela River which flows through the central district of the county. The Monongahela River was named by the

Algonquin (Delaware) Indians from a word meaning "crumbling banks" or "high banks fall down". The spelling was changed to Monongalia - either on purpose or as a result of an error - in the bill creating the County.

The original territory which comprised Monongalia County included land now occupied by eighteen of West Virginia's fifty-five counties and parts of three counties (Greene, Fayette, and Washington) in present day Pennsylvania. The land in the three counties in Pennsylvania was lost to Pennsylvania following the westward extension of the Mason-Dixon line in 1781.

The proposed project would be located on property previously used for a mine exhaust fan. The fan was removed by the mine approximately 5 years ago and the site is currently used by Northwest Fuel for electricity generation. There are no structures located on the site which would be affected by the proposed project, and the current Register of Historic Places does not have any listing for the proposed project site.

4.9.2 Environment Consequences

The proposed LNG generating facility would be located on property which has been previously disturbed and is currently used for electric generation from coal mine methane. The nearby property was previously used for a mine exhaust fan. The fan was removed by the mine approximately 5 years ago. DOE reviewed the current Register of Historic Places and could identify no properties within or near the proposed project site that are listed or would be eligible for listing on the National Register.

The proposed project is not expected to involve any known or suspected historic properties of districts. Moreover, the proposed project is located on property that has been previously disturbed or is currently being used in a manner similar with actions being considered in the proposed project. Therefore, impacts to cultural and historic properties are not expected to result from the proposed action. As part of its scoping process and to comply with Section 106 requirements, DOE consulted with the West Virginia SHPO. The SHPO has not identified any items of historic significance associated with the proposed project. The letter of consultation and the SHPO's response are included in Appendix A.

4.10 Soils and Geology

4.10.1 Affected Environment

Soils in the area of the proposed project are stable and would be used as a base to support the light industrial structures which would be installed. The soil at the Parrish Shaft site was previously disturbed. The subsurface geology of the area consists of coal sequences of sedimentary strata. The area has been extensively mined, and underground mining continues in surrounding areas. Longwall mining, such as that occurring in the general area, results in the planned collapse of undermined strata behind the active face.

This collapse can produce surface subsidence, and some surface subsidence has been reported in the general area.

4.10.2 Environmental Consequences

The soils at the Parrish Shaft site would provide a base for the light industrial use. The soils have been previously disturbed, and the proposed project would not alter the current use. Standard construction practices, such as re-seeding of disturbed areas, would occur. No lasting impacts would be expected to occur to the soils and local geology as a result of the proposed action.

4.11 Noise

This Section of the EA addresses potential consequences of environmental noise. Simply defined, noise is unwanted sound. People are exposed to noise on a nearly continual basis in every area of their lives. Excessive noise in the work place is recognized as a potential hazard for employees. Work place noise is regulated by OSHA under rules promulgated under the Occupational Safety and Health Act. Potential impacts to worker Safety and Health from work place noise from the proposed project are discussed in Section 4.6 of this EA.

In 1972, the United States Congress passed the Noise Control Act (42 USC 4901 *et seq*). In its statement of intent in passing the Act, Congress noted that "*inadequately controlled noise presents a growing danger to the health and welfare of the Nation's population, particularly in urban areas*". Congress also noted that "*the major sources of noise include transportation vehicles and equipment, machinery, appliances, and other products in commerce*". While recognizing that the primary responsibility for regulating and controlling noise rested with state and local governments, Congress declared as national policy "*to promote an environment for all Americans free from noise that jeopardizes their health or welfare*". Environmental noise is explicitly defined in Section 4902 of the Noise Control Act to mean "*the intensity, duration, and the character of sounds from all sources*". The term environmental noise is used somewhat synonymously with the term "community noise". The latter term, while not defined statutorily in the Noise Control Act, generally refers to noise to which a particular population may be exposed in the community outside of the work place.

Primary sources of community noise include those defined in general terms in the Noise Control Act (transportation vehicles and equipment, machinery, appliances, and products used in commerce). Specific examples of sources of noise (unwanted sound) within a community can include everything from traffic at a nearby airport or rail yard to barking dogs. Common sources of community noise include motor vehicles, domestic outdoor equipment (for example, lawn mowers), live or recorded music, sporting events, and industrial equipment.

To understand the potential impacts of community noise, it is helpful to

understand the nature of sound, its measurements, and its propagation, or the manner in which it travels in the environment. Formally defined, sound is the fluctuations in pressure above or below the ambient pressure in a medium (such as air) that has both elasticity and viscosity (Ostergaard, 2000). When speaking of sound or noise, most people are referring to airborne sound occurring within the normal response range of the human auditory system. Airborne sound is the rapid oscillation of air pressure above or below atmospheric pressure. It is a form of mechanical energy sometimes referred to as acoustical energy. Acoustical energy is transmitted in air as a longitudinal wave (that is, it consists of alternating zones of compression and expansion (or rarefaction) in the direction of transmission). Sound can be described in terms of frequency, or how fast these fluctuations occur, intensity, or how large these fluctuations are, and duration, or how long the sound persists. Each of these properties will be discussed below in terms of how it describes sound and how it is measured.

Because sound is the fluctuation in pressure above or below atmospheric pressure, it can be described in terms of the number of times per second that the fluctuating pressure rises above or falls below atmospheric pressure. Recalling that sound travels as a longitudinal wave, one cycle of that wave consists of a rise over atmospheric pressure (compression) followed by a drop below atmospheric pressure (expansion) and a return to the atmospheric pressure. The number of cycles per second (cps) describes the frequency of a sound. Frequency is generally described in a unit called hertz (abbreviated Hz), where one hertz is defined as one cycle per second. In the normal environment, sound is composed of various frequencies just as white light is composed of different colors. In understanding community noise, the frequencies of greatest interest are those frequencies which can be perceived as sound by the human auditory system. In a young person having a normal hearing range, the human ear can detect sounds having frequencies between 20 and 20,000 Hz. Normal human speech ranges between 100 and 6,000 Hz.

Sound intensity or amplitude refers to the relative power level of a sound. For sound within the hearing range, sound intensity corresponds to the perceived "loudness" of a sound or noise. The sound levels we encounter in daily life vary over a wide range. The lowest pressure level the human ear can detect is more than a million times less than that produced by a jet taking off. To avoid using both very large and very small numbers to express sound intensity in absolute terms, sound level is expressed in a logarithmic scale, which uses the exponential power of a number instead of the actual number. Recalling that sound is fluctuation in pressure above or below atmospheric pressure, sound intensity (or loudness) is defined as the difference in pressure fluctuation relative to a reference pressure. The unit of measure of sound level is the decibel (dB), which is a dimensionless quantity defined by:

$L = 20 \log (A/B)$ dB, where L is the sound level (in dB), and A, B are sound pressure levels.

In acoustics, all sound levels are defined as the logarithm of the ratio of two quantities where the denominator is the reference level. The sound pressure most commonly used as a reference pressure is 20 micropascals (20 μPa). This pressure was chosen as a

standard reference pressure because it approximately equals the threshold of human hearing at a frequency of 1,000 Hz in a person having a normal auditory response (Ostergaard, *ob cit*).

Using this reference pressure, the lowest sound level which the human ear can detect would be expressed in decibels as 0 dB, while the sound level produced by a nearby riveter (producing absolute pressure fluctuations of ~ 20,000,000 μPa) would be expressed as 120 dB. For most people, sound levels of 140 dB and higher would produce an actual sensation of pain. Because sound levels are expressed on a logarithmic scale, simply adding or multiplying sound levels does not give the intended results. For people having a normal hearing response, an increase in sound level of 10 decibels would be perceived as a doubling in loudness. Therefore, increasing a sound level from 65 dB to 75 dB would be perceived as doubling the loudness (an increase of 100%) rather than increasing the loudness by ~15% as would be indicated if the scale was linear. An increase in sound level of 3 dBA would be barely noticeable while an increase of 5 dBA would be clearly apparent for most people in normal circumstances (Cavanaugh, 1998).

The duration of a sound is the time over which the pressure fluctuations occur. Sounds may be constant with respect to intensity and frequency, or they may vary in intensity, frequency or both. Sounds may also be impulsive - such as the sound produced by a pneumatic hammer or pile driver. In general, impulsive sounds are more readily perceived than are steady-state sounds of similar frequency and amplitude.

Because community noise is most concerned with sound that is detected by the human ear, a weighting factor is often used to measure environmental sound. Referred to as "A-weighted sound", this weighting factor places greater emphasis on those frequencies that are detected by people having a normal auditory response. The A-weighted sound level de-emphasizes the very low and very high frequency components of sound in a manner similar to the frequency response of the human ear. A-weighted sound levels, which are expressed in decibels and indicated as dBA, correlate well with subjective reactions to noise.

In addition to weighting community noise to better reflect the human response to noise, it is also necessary to express sound that varies over time in frequency and loudness. A metric commonly used is the equivalent continuous sound level, expressed as L_{EQ}. The equivalent continuous sound level is the steady-state sound level that would produce an equivalent amount of acoustical energy as that present in the fluctuating sounds over the period of measurement (often 24 hours). L_{EQ} can be thought of as the average energy level of a varying sound in a community. Noise regulations often use L_{EQ} as an enforceable standard, and while L_{EQ} is not a direct measure of how people perceive and react to noise, L_{EQ} does correlate well with community responses to intrusive noise.

While L_{EQ} does correlate well with community response to noise, it does not adequately address the annoyance that the sound represents to the community - particularly in the nighttime when intrusive noise is generally perceived as being more annoying. A metric commonly used to express community noise and one that accounts

for the difference between daytime noise and nighttime noise is the day-night equivalent noise level, expressed as DNL or L_{dn}. DNL is an equivalent noise index that accounts for the greater annoyance caused by noise during the nighttime hours. DNL values are calculated by averaging hourly equivalent sound levels over a 24-hours period, and applying a 10 dB "penalty" to noise produced between the hours of 10 pm and 7 am. The two periods (that is, 7 am to 10 pm and 10 pm to 7 am) are then averaged to compute the overall DNL. For a continuous, non-varying noise source, the 10 dB penalty for nighttime hours results in a 6.4 dB addition to the steady-state noise level when the DNL is computed. In other words, a 60 dBA continuous noise source would yield a DNL of 66.4 dBA. DNL is computed by the following equation:

$$DNL = 10 \log 1/24 \, [15(10^{Ld/10}) + 9(10^{(Ln+10)/10})] \text{ dB, where,}$$

Ld is the equivalent noise level for the daytime hours (7 am -10 pm), and,
Ln is the equivalent noise level for the nighttime hours (10 pm - 7 am).

Although the Noise Control Act established as policy the promotion of environments free from harmful noise, there are no Federal regulations governing community noise. Likewise, the Federal government has not established enforceable standards as to the acceptable levels for community noise. Responding to the mandates of the Noise Control Act, in 1974 EPA issued guidelines to assist state and local governments seeking to establish state or local ordinance, regulations, or statutes related to community noise (EPA, 1974). The recommended level for the protection against outdoor activity interference and annoyance in rural residential areas is a DNL of 55 dBA. Because of the 10 dB penalty for nighttime hours, a DNL of 55 dBA is equivalent to a continuous noise level of 48.6 dBA. EPA has also found that people in a community will notice and complain about a new noise source if that new source increases the community noise level by 5 dBA or higher over the levels of existing noise in the community without the new source.

4.11.1 Affected Environment

Neither West Virginia nor Monongalia County has implemented noise control ordinances. A mine exhaust fan was previously located at the site of the proposed project. The fan, which ran continuously, was removed approximately 5 years ago. Currently, the property adjacent to the proposed site is the location of a power generation project. The project, operated commercially by Northwest Fuel, utilizes coal mine methane to generate electricity for

Figure 4.5: Power Generation Units (gensets) Associated with the Existing Commercial Northwest Fuel Activity

sale to the grid. The generation is accomplished using 18 internal combustion engines coupled to individual generators. The gensets, as they are called, are located in two rows (Figure 4.4) near the north side of the Northwest Fuel site. The current activity on the adjacent property is not connected to the proposed action; however, nearby residents have expressed concern in the past over noise from the previous exhaust fan and, more recently, over noise from the Northwest Fuel project.

The property line of the proposed site is located approximately 100 feet (30 meters) from the nearest residence, a single family dwelling immediately northeast of the site. The actual LNG production facility would be located near the center of the proposed site at a distance of approximately 1,000 ft (330 meters) from the nearest residence. The equipment to be used in the proposed project which could contribute to environmental noise, are two compressors. These units are acoustically insulated and have an expected noise output of less than 80 dBA. Smaller units are not expected to produce any noticeable noise. Given the small noise signature, the distance from the property line, and the shielding of the proposed project by the intervening hillside, no additional noise attributable to the LNG production operations is expected to be discernible at the property line. Transportation of the LNG from the site would produce some additional noise. No more than two trucks per day are anticipated being needed, and these trips would be scheduled during daylight hours when any additional noise contribution would be indiscernible from normal vehicular traffic in the area.

As part of its public scoping process, DOE met with the nearest residents to the site of the proposed project. Northwest Fuel's project was initially partially funded by the DOE and noise monitoring was conducted at the property line between the Parrish Shaft site and the adjacent residence at various times during the Cooperative Agreement. Measured noise levels did not exceed levels analyzed in the EA prepared for the Northwest Fuel project. However, because of limited gas supply, Northwest Fuel was not able to operate all eighteen gensets as originally planned.

In the summer of 2004, Northwest Fuel acquired the ability to produce substantially more coal mine methane than was available during their Cooperative Agreement with the DOE. Accordingly, Northwest Fuel could choose to run all eighteen gensets for the production of electricity. Northwest Fuel must continue to generate electricity to maintain their contractual right to occupy the site. It is anticipated that Northwest Fuel will continue to operate a limited number of gensets concurrent with the proposed Appalachian-Pacific

Figure 4.6: Noise Survey Instrument on Property Line Adjacent to Nearest Residence

project.

Because of the past experiences of the nearby residents with noise from the site, DOE conducted a property line noise survey to establish a baseline against which to assess potential impacts of noise from the proposed project. The survey was conducted over a 24-hour period beginning at ~ 5:30 PM on Friday, April 8, 2005 and ending at ~ 6:30 on Saturday, April 9, 2005. The survey was conducted using a Quest 1900 digital integrating sound level meter housed in an environmental enclosure (Figure 4.5). The unit was set up on the property line between the Parrish Shaft site and the closest residence. The instrument was placed in a line-of-site with the location of the generator sets. The sound meter was set to measure A-weighted sound integrated at 1 minute intervals. The meter was calibrated against a Quest® QC-10 acoustic calibrator at the beginning and end of the survey.

The results of the baseline survey indicate that noise levels have risen since the conclusion of the Cooperative Agreement between Northwest Fuel and the DOE. The DNL for the period of the survey was 56.8 dBA. This is approximately 5 dBA over the levels identified as having no significant impact during the assessment of impacts conducted in 2001 for the [then] proposed Northwest Fuel project. The summary information from the baseline survey is shown in Table 4.5.

All of the apparent increase in environmental noise cannot be attributed to the Northwest Fuel project. Since 2001, the Loveridge Mine has re-opened, and traffic on County Route 13 has increased as workers travel to and from the Miracle Run portal west on County Route 13. Additionally, Northwest Fuel recently installed mufflers on each of the 18 engines to reduce the noise output. Noise from Northwest Fuel operations is, however, discernible at the property line. Depending on weather conditions, the nearby residents do report noticing noise from the Northwest Fuel project.

Run Time:	24:49:13	LDN:	56.8 dB
LEQ:	51.3 dB	CNEL:	57.8 dB
TWA:	56.2 dB	TAKM3:	54.4 dB
SEL(3):	100.7 dB	Pa2Sec:	4.7
Ovl:	0.00%	LN5:	57.6 dB
Peak:	101.5 dB	LN10:	54.5 dB
Max:	82.3 dB	LN50:	48.7 dB
Min:	37.8 dB	LN90:	43.0 dB
Logging Parameters			
Start Time:	4/8/05 5:27:04 PM	Stop Time:	4/9/05 6:16:18 PM
Logging Interval:	0:01:00		
Meter Range:	30-90 dB		
Weighting:	A	Peak Weighting:	C
Threshold:	Off	Exchange Rate:	3dB
Time Constant:	Fast	Filter:	(none)

Table 4.5: Parrish Shaft Site Baseline Noise Survey Summary

4.11.2 Environmental Consequences

Northwest Fuel has agreed to contractual language with Appalachian-Pacific that limits the total noise from both projects to no more than the decibel allowance permitted under the previous Cooperative Agreement, which was 48.6 dBA. Also, by purchasing and liquefying most of the coal mine methane currently available to Northwest Fuel, the proposed Appalachian-Pacific project would have the effect of limiting the number of gensets that Northwest Fuel could run concurrent with the proposed project.

The specific language contained in the original CA between DOE and Northwest Fuel permitted a maximum noise contribution to community noise of 51.9 dBA DNL. Noise contribution in excess of that level would lead to a decrease in power production up to and including shutting down individual gensets until the 51.9 dBA DNL level was attained.

The agreement between Appalachian-Pacific and Northwest Fuel stipulates that

"both Parties shall cooperate in abiding by the noise limits that will be required by the DOE during the course of the DOE Period of the Project as long as these limits are no more stringent than those under which NW Fuel operated its DOE project at the same site."[4]

This language will allow DOE to continue to work with Northwest Fuel (through DOE's CA with Appalachian-Pacific) as well as with Appalachian-Pacific to cooperatively address any increased noise without having to specifically identify and attribute the source to a particular activity or piece of equipment associated with the proposed LNG project. It will also allow DOE to act as an advocate to reduce community noise attributable to activities on the Parrish Shaft site with which DOE is involved. With these agreements in place, significant community noise impacts from the proposed project would not be expected.

4.12 Environmental Justice

Environmental justice addresses considerations related to the fair treatment and meaningful involvement of all people regardless of race, ethnicity, culture, income, or educational level in developing, implementing, and enforcing environmental laws, regulations, and policies. The environmental justice movement was started by citizens, who needed to address the inequity of environmental protection services in their communities. The goal of environmental justice is to ensure that all people, regardless of race, national origin or income, are protected from disproportionate impacts of

[4] Estes, Charles D., "RE: Noise restriction limits." E-mail to Anthony Zammerilli, NETL NEPA Document Manager, March 25, 2005.

environmental hazards.

On February 11, 1994, President Bill Clinton signed an Executive Order (EO 12898) to focus Federal attention on the environmental and human health conditions of minority and low-income populations with the goal of achieving environmental protection for all communities. The Order directed Federal agencies to develop environmental justice strategies to aid Federal agencies in identifying and addressing disproportionately high and adverse human health or environmental effects of their programs, policies, and activities on minority and low-income populations. The Order is also intended to promote nondiscrimination in Federal programs substantially affecting human health and the environment, and to provide minority and low-income communities access to public information on, and an opportunity for public participation in, matters relating to human health or the environment.

To be classified as an environmental justice community, residents must be a minority and/or low income group; excluded from the environmental policy setting and/or decision-making process; subject to a disproportionate impact from one or more environmental hazards; and experience a disparate implementation of environmental regulations, requirements, practices and activities in their communities. To determine whether the potential exists for environmental justice issues to result from a proposed Federal action it is first necessary to determine whether the site where the proposed Federal action will occur would be classified as an environmental justice community. The most reliable source of such data is the census tract data collected and reported by the Census Bureau.

Census tracts are small, relatively permanent geographic entities within counties delineated by a committee of local users of statistical data collected by the Census Bureau. The Census Bureau uses census tracts to collect, organize, tabulate, and report the results of its decennial (occurring every 10 years) censuses. Generally, census tracts have between 2,500 and 8,000 people and boundaries that follow visible features such as roads, highways, rivers, railroads, or high-tension power lines. In other words, the boundaries of census tracts can be clearly demarcated with regard to the population included in a particular census tract. The Census Bureau recognizes 50,690 census tracts in the United States and Puerto Rico.

4.12.1 Affected Environment

The proposed project would be located in Western Monongalia County West Virginia. The proposed site falls in Census Tract 114 within Monongalia County West Virginia (hereafter referred to herein as simply Tract 114). Tract 114 is roughly demarcated by the Marion County- Monongalia County border on the south, the Wetzel County-Monongalia County border on the west, and the Pennsylvania border on the north. The eastern boundary of Census Tract 114 roughly follows County Route 29 to Route 33 to Route 22 to Route 31 where it joins State Route 7. The northeastern border runs west along State Route 7 before terminating at the Pennsylvania border just east of Blacksville, WV.

Based on the 2000 census, Census Tract 114 had a total population of 4,729 persons. Of this total population, 4,070 persons identified their race as White; 598 persons identified their race as Black or African American; 20 persons identified their race as Hispanic or Latino; 9 persons identified their race as Asian; 8 persons identified their race as American Indian or Alaska Native; 24 persons identified themselves as two or more races (Census, 2000). No responders to the census identified their race as Native Hawaiian or other Pacific Islander. By comparison, taken as a whole, Monongalia County has a Black or African American population of 3.3 percent and an Asian population of 2.4 percent. One percent of County residents identify their national origin as being Hispanic and 0.2 percent as American Indian and Alaska Native. Based on these data, Census Tract 114 would not be classified as an environmental justice community with regard to race or national origin.

The median household income in Census Tract 114 (based on 1999 data) was $34,487 (Census 2000). The median household income for Monongalia County (based on 1999 data) was $28,625. Monongalia County's median income is close to West Virginia's median income of $29,696. Census Tract 114 taken individually has a greater median income than the median income of the State taken as a whole. Additionally, the median income for Census Tract 114 is greater than the median income for all but six of the other twenty census tracts in Monongalia County. Based on these data, Census Tract 114 would not be classified as an environmental justice community with regard to income level.

4.12.2 Environmental Consequences

The population potentially affected by the proposed project would not be classified as an environmental justice community. Further, the expected impacts from the proposed Federal action would not include actions having an adverse impact on the environment or representing a disparate application of environmental laws or policies.

4.13 Aesthetics

4.13.1 Affected Environment

The proposed project would be located in a rural setting in a valley with a history of farming and underground mining. The topography of the area varies from a flat stream valley to steep hills and small ridge lines. Elevations of nearby hilltops exceed 1600 feet above sea-level, and the topographic relief (the difference between the lowest and highest elevations) in the vicinity of the proposed project is over 400 feet. Vegetative cover on the valley and slopes includes hardwoods and evergreens reaching heights of 70 feet and more.

4.13.2 Environmental Consequences

The proposed project would occur on a site previously disturbed by mining and power generation activities. The stationary storage tank for the LNG would not be noticeable from the road when approaching the site on County Route 13 from the east. When approaching from the west, the view of the site would generally be obstructed by topography and trees. Further, the proposed project consists of low, modular units and similar in visual impact to previous activities on the site. Security lighting for the site would be located as close to ground level as practicable and limited in number and output to that necessary for site security and to protect workers. Lighting would be directed away from near-by residences to the extent practicable.

Appalachian-Pacific considered the alternative of using a single, vertical storage vessel approximately 45 feet height. This alternative would have been clearly visible to nearby residents and when approaching the site on County Route 13 from both the east and the west. In considering this alternative, Appalachian-Pacific would have chosen a color scheme to reduce intrusive visual impacts, but security lighting would likely have to be pole-mounted and higher than with the horizontal tank arrangement. Accordingly, a single vertical storage tank would be expected to have greater aesthetic consequences than with the horizontal configuration proposed.

This Page Intentionally Left Blank

5.0 Regulatory Compliance

The proposed project would be conducted under the terms of all existing and future permits, licenses, and requirements. Key Federal and State requirements associated with the proposed project are identified in this section.

5.1 Federal Requirements

- 49 CFR Part 193 – Liquefied Natural Gas Facilities: Federal Safety Standards

  This section, overseen by the Department of Transportation's Office of Pipeline Safety, outlines siting requirements, design, construction, equipment, operations, maintenance, personnel qualifications, personnel training, fire protection, and security. This project is non-jurisdictional with regard to the Office of Pipeline Safety because neither LNG nor the natural gas to make the LNG are transported to or from the site by pipelines.

- Clean Air Act, as specified at 40 CFR, Part 70 - Title V Operating Permits

  Any major new or modified stationary sources having a potential to emit more than 100 tons/year of any regulated air pollutant is required to obtain a permit to operate. The authority to issues permits is delegated to the state where the state has submitted and received Federal approval for its Title V operating permit program. Appalachian-Pacific's project does not require a permit under 40 CFR, Part 70 because the project will only be emitting 0.439248 tons/year of NO_x, 0.002635 tons/year of SO_x, and 0.008337 tons/year of PM_{10}. The project is not expected to emit any significant quantities of CO, Lead, or H_2S.

- Clean Air Act Amendments of 1990 (CAAA), Title III (Hazardous Air Pollutants)

  The CAAA required EPA to develop a listing of all categories and subcategories of major emission sources and area sources for 189 listed hazardous air pollutants and to subsequently establish emission standards for those categories and subcategories based on application of "maximum achievable control technology", or MACT. MACT standards require controlling emissions to at least the level achieved by the best controlled similar emission sources.

  A major source is defined as any stationary source or group of stationary sources located within a contiguous area and under common control that emits or has the potential to emit (considering controls) in the aggregate 10 tons per year or more of any hazardous air pollutant or 25 tons per year or more of any combination of hazardous air pollutants. An area source was defined as any

source of emissions of hazardous air pollutants that was not a major source. A new source was defined as any stationary source the construction or modification of which was commenced after regulations establishing an emission standard for that source were proposed. Appalachian-Pacific is not expected to emit sufficient amounts of hazardous air pollutants to require a permit under the CAAA Title III.

- National Emission Standards for Hazardous Air Pollutants (NESHAP) applicable to the Oil and Natural Gas industry as specified at 40 CFR 63.760 *et seq*.

EPA promulgated the NESHAP for the oil and natural gas production industry on June 17, 1999. The new emission standards define the MACT for controlling hazardous air emissions from the Oil and Natural Gas industry, and this rule, accordingly, is sometimes referred to as the ONG MACT. The rule was targeted to cover large sources for HAPs within the industry category, and requires controls on certain glycol dehydration units and condensate storage tanks. It also imposes requirements for repairing equipment leaks at natural gas processing plants.

Based on the final design submitted by the Industrial Participant, the proposed project would not be subject to the requirements of the ONG MACT. Whether the ONG MACT requirements could become applicable to the proposed project at some point in the future would depend on the operation of the facility. Glycol dehydration units that process less than 283 thousand m^3/day on an annual average are exempt from the MACT requirements. Should gas production from the vents be more productive than anticipated, MACT requirements could apply and would have to be re-evaluated by the Industrial Participant.

- 10 CFR 1022 Compliance with Floodplain and Wetland Environmental Review Requirements

DOE has promulgated regulations to implement the requirements of Executive Order 11988, which requires each Federal agency to have in place regulations and procedures to ensure that the potential effects of any action the agency may take in a floodplain are evaluated and that its planning programs and budget requests reflect consideration of flood hazards and floodplain management. These regulations require that DOE determine whether a proposed action would be located within a base or critical action floodplain and to include an assessment of impacts to floodplains within the appropriate NEPA document. The assessment must describe the proposed project; discuss positive and negative, direct and indirect, and long- and short-term effects of the proposed action on the floodplain and/or wetlands; describe alternatives to the proposed action considered; and evaluate measures to mitigate adverse effects of the proposed action.

Consultation with the state and county authorities responsible for flood

plain management indicate that the parcel on which the proposed project would be located is identified as a flood area. An inspection of the site and discussion with the nearby resident suggest that the actual footprint of the proposed project would not be located in the base (100 year) floodplain. Appalachian-Pacific has arranged for licensed engineer to determine whether the proposed project is within the base floodplain. If it is determined that any part of the proposed project would be located within the base floodplain, and if it is not practicable to adjust the project location to avoid encroaching on the 100-year floodplain, Appalachian-Pacific would be required to obtain a Monongalia County Floodplain Development permit before construction could begin.

5.2 State Requirements

- 45 CSR 13 - Permits for the Construction, Modification, Relocation, and Operation of Stationary Sources of Air Pollutants, Notification Requirements, Temporary Permit, General Permit, and Procedures for Evaluation

Expected emissions of oxides of nitrogen would not exceed 100 tons per year therefore no permit is required.

- 45 CSR 14 - Permits for the Construction and Major Modification of Major Stationary Sources of Air Pollution for the Prevention of Significant Deterioration

Projects located in an area in attainment with the NAAQS for a criteria pollutant and which would be a major new source for the criteria pollutant are subject to New Source Review requirements. Monongalia County is in attainment with the NAAQS for all criteria pollutants. Appalachian-Pacific is not a major source and therefore is not regulated under 45 CSR 14.

5.3 Local Requirements

- Monongalia County Flood Plain Management Ordinance

Monongalia County has promulgated a floodplain management ordinance, which is available from the Monongalia County Planning Commission website at http://www.moncpc.org/Ordinances/Floodplain.pdf. This ordinance makes it unlawful for any person, partnership, business, or corporation to undertake or cause to be undertaken, any development or new construction, substantial improvement, the placement or relocation of any structure within a floodplain area unless a permit has been obtained from the Flood Plain Administrator. The ordinance further defines the requirements and supporting information necessary for the permit to be considered and issued.

If it is determined that the proposed project would be located within the base

floodplain, Appalachian-Pacific would be required to apply for a permit through the Monongalia County Flood Plain Administrator. The permit process includes a requirement that a notice be posted at the County Courthouse that an application is pending before the Flood Plain Administrator and that written comments concerning such application be received for a period of seven days. At the end of the seven day period, the application is acted upon taking into consideration any comment received. Alternately, Appalachian-Pacific may elect to move the project equipment slightly northwest to an area outside the flood plain.

5.4 Non-Governmental Regulations of LNG

- NFPA 59A – Standards for the Production, Storage, and Handling of Liquefied Natural Gas (LNG)

The National Fire Protection Association (NFPA) produces industry standards regarding fire, electrical, and building safety. NFPA 59A outlines site selection, design, construction, and fire prevention and protection at LNG facilities.

6.0 Cumulative Effects and Long-Term Environmental Consequences of the Proposed Action

Cumulative impacts are additive effects over time on the same or related resources from multiple actions or causes. The LNG from Coal Mine Methane for Industrial and Transportation Applications, if successful, could continue to be operated by the Industrial Participant, or a successor, as a commercial activity after the completion of the demonstration period under the cooperative agreement with DOE. The project would continue to utilize waste methane from the mine, which would continue to realize the benefits of reducing methane emissions and converting a waste product to beneficial use. No adverse cumulative effects or long-term consequences on any resource could be identified for the proposed action.

A successful demonstration of the Integrated LNG Generation System could lead to similar installations at other sites. These sites could, but would not necessarily, be located in Monongalia County. Following a successful demonstration, it is likely that subsequent projects - should they occur - would be undertaken as commercial operations without cost-shared funding by DOE.

This Page Intentionally Left Blank

7.0 Irreversible and Irretrievable Commitments of Resources

The irreversible and irretrievable commitments of resources for the proposed action are the energy and materials that could not be reclaimed, reused, or recycled during construction of the proposed facilities. During operation, the following resource commitments would be required for the coal mine waste methane integrated LNG generation system:

- Electricity 28,850 MWH
- Coal Mine Waste Methane 840 MMCF

Adequate quantities of these materials would be available locally to support the long-term needs of the proposed project. Appalachian-Pacific has obtained a sub-lease from Northwest Fuel, the lessee for the coalbed methane rights at the Federal No.2 Mine.

This Page Intentionally Left Blank

8.0 Environmental Consequences of the No Action Alternative

Because DOE's role in the proposed project would be limited, involving providing only financial support for less than 50% of the integrated system's estimated cost, only the No-Action alternative was analyzed in its entirety. Also, DOE does not have a decision-making role in the proposed project, other than a decision to act on a proposal for a defined project at a specific location.

Under the No-Action Alternative, DOE would not provide partial funding for the LNG from Coal Mine Methane for Industrial and Transportation Applications project. In the absence of DOE funding, Appalachian-Pacific could continue with plans to construct and operate the proposed system, in which case environmental changes would be expected to be the same as those identified and analyzed in the Environmental Assessment. Alternately, Appalachian-Pacific could also discontinue plans for the project, in which case the waste methane would either continue to be used by Northwest Fuel for power generation or would be vented to the atmosphere. Venting would result in the release of 900,000 cubic feet of methane per day over the three-year life of the project, which would be the greenhouse gas equivalent of 376,000 metric tons of CO_2 released to the atmosphere.

If the proposed project was not funded by DOE, data resulting from demonstration of this innovative technology application would not be available. Information for use by industry in decision making on the application of the technology would also not be available. Evaluation of the applicability and feasibility of the technology for utilization of coal mine waste methane would not be possible. In addition, should the Industrial Participant decide to proceed with the project in the absence of DOE funding, noise arising from the project could be greater than with DOE's participation, as DOE has determined to require noise abatement measures to mitigate property line noise. As neither West Virginia nor Monongalia County have enacted noise control ordinances, in the absence of DOE's participation, noise abatement measures would be at the discretion of the Industrial Participant or the site owner unless or until public concern or the threat of legal action necessitated noise abatement.

This Page Intentionally Left Blank

9.0 Similar Actions and Actions Being Considered Under Other National Environmental Policy Act Reviews

The proposed action is not related to other actions currently in process or actions being considered under other NEPA reviews.

This Page Intentionally Left Blank

10.0 Relationship of the Proposed Action to the Applicable Federal, State, Regional, of Local Land Use Plans and Policies

The proposed project would be contained totally within the boundaries of the Eastern Associated Coal Corporation (EACC) Federal Number 2 Mine, located in Monongalia County, WV; and would be consistent with existing operational activities. Operational activities at EACC's Federal Number 2 Mine are consistent with applicable Federal, state, regional, and local land use plans and policies.

This Page Intentionally Left Blank

11.0 Stakeholder Participants

Meetings with the industrial participant and internal subject matter experts were held on December, 2004 to discuss the final proposed project design and environmental issues. Personnel from NETL visited the proposed project site in February, 2005 and subsequently in March and April to discuss the proposed action with the nearby residents and to assess baseline noise.

This Page Intentionally Left Blank

12.0 References

Brunner, Daniel J. and Karl Schultz. *Effective Gob Well Flaring*, CBM Review, World Coal, Palladian Publications Ltd, U.K, September, 1999.

Cavanaugh, William J. and Gregory C. Tocci. *Environmental Noise The Invisible Pollutant*, E_2SC, Vol 1, Number 1, USC Institute of Public Affairs, Fall 1998. Available: http://www.nonoise.org/library/envarticle/index.htm.

DOE, 2002. Final Environmental Assessment - Northwest Fuel Development, Incorporated – Demonstration of an Integrated Power Generation System for Coal Mine Waste Methane Utilization, U.S. Department of Energy National Energy Technology Laboratory, August 2002, DOE/EA-1416.

Driscoll, Dennis P., Noral D. Stewart, and Robert R. Anderson. *Community Noise*, in The Noise Manual, E.H. Berger, L.H. Royster, J. D. Royster, D. P. Driscoll, and M. Layne, Editor, American Industrial Hygiene Association, Fairfax, VA, 5th Edition, 2000.

Earshen, John J. *Sound Measurement: Instrumentation and Noise Descriptors*, in The Noise Manual, E.H. Berger, L.H. Royster, J. D. Royster, D. P. Driscoll, and M. Layne, Editor, American Industrial Hygiene Association, Fairfax, VA, 5th Edition, 2000.

EPA, 1974. *Levels of Environmental Noise Requisite to Protect Public Health and Welfare with an Adequate Margin of Safety*. 550/9-74-004, Office of Noise Abatement and Control, Washington, D.C.

EPA, 1997. *Technical and Economic Assessment of Potential to Upgrade Gob Gas to Pipeline Quality*. 430-R-97-012, Office of Air and Radiation, Washington, D.C.

EPA, 2001. *Coalbed Methane Outreach Program - Environmental Protection with a Profit*, EPA-430-F-99-008, Office of Air and Radiation, Washington, D.C., August 2001.

EPA, 2005. *Inventory of U.S. Greenhouse Gas and Sinks: 1990 – 2003*, U.S. Environmental Protection Agency, Washington, D.C., EPA 430-R-05-003, April 15, 2005

FEMA (Federal Emergency Management Agency), U.S. Department of Transportation, and U.S Environmental Protection Agency, 1988. *Handbook of Chemical Hazard Analysis Procedures*, Federal Emergency Management Agency Publications, Washington, D.C.

FERC, 2004. LNG Briefing, Office of Energy Projects, Federal Energy Regulatory Commission, April 2004. Accessed September 2005, Available: http://www.ferc.gov/for-citizens/lng-briefing.pps.

FERC, 2005. Industries: Liquefied Natural Gas (LNG). Accessed April 2005, Available: http://www.ferc.gov/industries/gas/indus-act/lng-what.asp

FERC, 2005a. "A Guide to LNG: What Every Citizen Should Know", Federal Energy Regulatory Commission, Office of Energy Projects, Washington, DC, April, 2005. Available: http://www.ferc.gov/industries/gas/indus-act/lng-what.asp

Miller, Laymon N., *Noise Control for Reciprocating and Turbine Engines Driven by Natural Gas and Liquid Fuel*, Bolt Beranek and Newman Inc. Cambridge, MA, for American Gas Association, Inc., 1969.

Monongalia County Planning Commission, *County Profile*, 2004, Accessed: April, 2005, Available: http://moncpc.org/CountyProfile/

NETL, 2004. *Natural Gas Facts: Liquefied Natural Gas (LNG)*, U.S. Department of Energy, Strategic Center for Natural Gas & Oil, June, 2004. Available: http://www.netl.doe.gov/scngo/Natural%20Gas/publications/LNG/Policy023.pdf

Ostergaard, Paul, B. *Physics of Sound and Vibration*, in The Noise Manual, E.H. Berger, L.H. Royster, J. D. Royster, D. P. Driscoll, and M. Layne, Editor, American Industrial Hygiene Association, Fairfax, VA, 5th Edition, 2000.

Shell-USGP, 2005. Characteristics of Liquefied Natural Gas (LNG). Accessed April, 2005, Available: http://www.shell-usgp.com/lngsaschar.asp

U.S. Census Bureau. American Fact Finder, *Census 2000*, Accessed: April, 2005, Available: http://factfinder.census.gov/home/saff/main.html?_lang=en

13.0 List of Agencies and Individuals Contacted

- West Virginia Development Office - Energy Efficiency Program
- U.S. Department of the Interior; Fish and Wildlife Service
- West Virginia Division of Culture and History

This Page Intentionally Left Blank

U.S. Department of Energy

National Energy Technology Laboratory

June 24, 2005

Mr. John F. Herholdt, Jr.
Manager, Energy Efficiency Program
West Virginia Development Office
State Capitol Complex
Building #6, Room 645
Charleston, WV 25305

Dear Mr. Herboldt:

The purpose of this letter is to inform you that the U.S. Department of Energy (DOE) is considering participation in a project to develop "LNG from Coal Mine Methane for Industrial and Transportation Applications." The project would result in design, construction, and operation of an integrated gas processing and liquefied natural gas (LNG) generation system at a site in western Monongalia County, WV. The proposed project would be located on previously disturbed land adjacent to Northwest Fuel Development, Inc.'s project that your office investigated in December of 2001. The proposed system would demonstrate the feasibility of using waste coal mine methane gas to generate electricity and would be located at the Parrish Shaft property of the Federal Number 2 Mine southeast of Wadestown, WV. A description of the proposed project and graphics depicting its location are enclosed.

Based on review of currently available information on the scope, location, and projected environmental consequences of the proposed project, DOE considers the proposed action to be one for which an Environmental Assessment (EA) would provide the appropriate level of review and analysis under DOE's National Environmental Policy Act Implementing Procedures. The EA will be prepared in compliance with the requirements of the National Environmental Policy Act of 1969. Our Office anticipates completion of a draft EA within the next several weeks, and we welcome initial input from the State of West Virginia regarding the scope of the environmental analyses that should be incorporated into the EA. Upon availability, copies of the draft EA will be forwarded to your office for review and comment. The Department of Energy will address comments in a final EA, which will form the basis for decision-making.

Should you require addition information, please contact me by telephone at 304-285-5443 or by e-mail at 'John.Ganz@NETL.DOE.GOV.'

Sincerely,

John Ganz
NEPA Compliance Officer

Enclosures

3610 Collins Ferry Road, P.O. Box 880, Morgantown, WV 26507-0880 □ 626 Cochrans Mill Road, P.O. Box 10940, Pittsburgh, PA 15236-0940
REPLY TO: Morgantown Office • John.Ganz@netl.doe.gov • Voice (304) 285-5443 • Fax (304) 285-4403 • www.netl.doe.gov

U.S. Department of Energy

National Energy Technology Laboratory

December 30, 2005

Mr. John F. Herholdt, Jr.
Manager, Energy Efficiency Program
West Virginia Development Office
State Capitol Complex
Building #6, Room 645
Charleston, WV 25305

Dear Mr. Herboldt:

The National Energy Technology Laboratory has prepared the enclosed draft Environmental Assessment (EA) under the National Environmental Policy Act Implementing Procedures for a project to convert coal mine methane to liquefied natural gas (LNG). The project, "LNG from Coal Mine Methane for Industrial and Transportation Applications," is proposed by Appalachian-Pacific Coal Mine Methane Power Co. (Appalachian-Pacific), and would result in design, construction, and operation of a system to convert waste coal mine gas into LNG via dehydration, amine scrubbing, and refrigeration. This project will store up to 30,000 gallons of LNG on site.

The proposed system would be located at the Eastern Associated Coal Corporation's Federal Number 2 mine in Monongalia County, WV. Appalachian-Pacific would purchase coal mine methane from Northwest Fuel Development Inc., which owns the rights to the fuel. Appalachian-Pacific would construct and demonstrate a system capable of producing approximately 10,000 gallons-per-day of LNG and storing up to 30,000 gallons of LNG on site for daily transportation to industrial users and heavy vehicle and tow boat operators.

Pursuant to our NEPA implementing procedures, we are providing the enclosed document to your office for review and comment. We would appreciate receiving any comments your office may have by the close of the public comment period, January 30, 2006, to allow us to address all comments during the preparation of the final EA, which will form the basis for decision-making.

Should you require addition information, please contact me by telephone at 304-285-4641 or by e-mail at 'anthony.zammerilli@NETL.DOE.GOV.'

Sincerely,

Anthony Zammerilli
NEPA Document Manager

Enclosures

3610 Collins Ferry Road, P.O. Box 880, Morgantown, WV 26507-0880 □ 626 Cochrans Mill Road, P.O. Box 10940, Pittsburgh, PA 15236-0940
REPLY to: Morgantown Office • Anthony.Zammerilli@netl.doe.gov • Voice (304) 285-4641 • Fax (304) 285-4403 • www.netl.doe.gov

West Virginia USA West Virginia Development Office

January 4, 2006

Mr. Anthony Zammerilli
NEPA Document Manager
U.S. Department of Energy
National Energy Technology Laboratory
3610 Collins Ferry Road
P.O. Box 880
Morgantown, WV 26507-0880

Dear Mr. Zammerilli:

We appreciate being in receipt of the draft Environmental Assessment of the Appalachian-Pacific Coal Mine Methane Power Co. LLC project titled "LNG from Coal Mine Methane for Industrial and Transportation Applications". This research is to be conducted at the Federal Number 2 Mine Parish Shaft site in Monongalia County, WV.

We have been appraised of this project by the developer and feel comfortable with its moving forward. We find the draft Environmental Impact Statement to be a thorough discussion of the technologies to be employed and the environmental impacts of the applications of these technologies. Coal mine methane recovery projects have significant safety, environmental and energy benefits. It is important to validate the technology being advanced by Appalachian-Pacific.

We appreciate the opportunity to review this document. Feel free to contact us at 304-558-0350 as additional questions arise.

Sincerely,

John F. Herholdt, Jr.
Manager
Energy Efficiency Program

1900 Kanawha Boulevard, East, Charleston, WV 25305-0311 • (304) 558-2234 • www.wvdo.org

U.S. Department of Energy

National Energy Technology Laboratory

June 24, 2005

Mr. Thomas R. Chapman
U.S. Fish and Wildlife Service
West Virginia Ecological Services Field Office
694 Beverly Pike
Elkins, WV 26241

Dear Mr. Chapman:

The United States Department of Energy (DOE) is considering participation in a project that would result in design, construction, and operation of an integrated gas processing and liquefied natural gas (LNG) generation system at a site in western Monongalia County, WV. The proposed project would be located on previously disturbed land adjacent to Northwest Fuel Development, Inc.'s project that your office reviewed in December of 2001. The proposed system would demonstrate the feasibility of using waste coal mine methane gas to generate LNG and would be located at the Parrish Shaft property of the Federal Number 2 Mine southeast of Wadestown, WV. A description of the proposed project and graphics depicting its location are enclosed.

As part of our coordination and consultation responsibilities, and to comply with both Section 7 of the Endangered Species Act of 1973, as amended, and provisions of the Fish & Wildlife Coordination Act, we would appreciate receiving any information you have on wildlife resources, including endangered and threatened species or critical habitat, in the project area. Your thoughts on the potential impacts associated with the proposed project would also be appreciated.

Based on the scope of the proposed project, a preliminary examination of the proposed site, and the potential for the project to result in minimal environmental consequences, DOE has initiated preparation of an Environmental Assessment under the National Environmental Policy Act. Information that you provide will be incorporated and appropriately addressed in the Environmental Assessment. If your initial review concludes that no endangered or threatened species (or their habitat) are present in the project area, and that neither protected species nor their habitat would be affected by the proposed action, a written acknowledgement of that conclusion would be appreciated. In any case, the information that you provide will be considered in preparing the draft Environmental Assessment, which will be provided for review upon availability.

Should you require addition information, please contact me by telephone at 304-285-5443 or by e-mail at 'John.Ganz@NETL.DOE.GOV.'

Sincerely,

John Ganz
NEPA Compliance Officer

Enclosures

3610 Collins Ferry Road, P.O. Box 880, Morgantown, WV 26507-0880 □ 626 Cochrans Mill Road, P.O. Box 10940, Pittsburgh, PA 15236-0940
REPLY TO: Morgantown Office • John.Ganz@netl.doe.gov • Voice (304) 285-5443 • Fax (304) 285-4403 • www.netl.doe.gov

United States Department of the Interior

FISH AND WILDLIFE SERVICE

West Virginia Field Office
694 Beverly Pike
Elkins, West Virginia 26241

August 2, 2005

Mr. John Ganz
NEPA Compliance Officer
U.S. Department of Energy
National Energy Technology Laboratory
Post Office Box 880
3610 Collins Ferry Road
Morgantown, West Virginia 26507-0880

Re: Western Monongalia County Gas Generation Facility

Dear Mr. Ganz:

This responds to your information request of June 24, 2005 regarding the potential impacts of a proposed project on wetlands and federally listed endangered and threatened species and species of concern. The United States Department of Energy proposes participation in a Gas Generation Facility Project in western Monongalia County, West Virginia. These comments are provided pursuant to the Endangered Species Act (87 Stat. 884, as amended; 16 U.S.C. 1531 et seq.).

No federally listed endangered and threatened species are expected to be impacted by the project. Therefore, no biological assessment or further section 7 consultation under the Endangered Species Act is required with the Fish and Wildlife Service. Should project plans change, or if additional information on listed and proposed species becomes available, this determination may be reconsidered. A compilation of federally listed endangered and threatened species in West Virginia is enclosed for your information.

Definitive determinations of the presence of waters of the United States, including wetlands, in the project area and the need for permits, if any, are made by the U.S. Army Corps of Engineers. They may be contacted at: Pittsburgh District, Regulatory Branch, William S. Moorhead Federal Building, 1000 Liberty Avenue, Pittsburgh, Pennsylvania 18222-4188, telephone (412)395-7152.

If you have any questions regarding this letter, please contact Ms. Barbara Douglas of my staff at (304) 636-6586, or at the letterhead address.

Sincerely,

Thomas R. Chapman
Field Supervisor

FEDERALLY LISTED ENDANGERED AND THREATENED SPECIES IN WEST VIRGINIA

COMMON NAME	SCIENTIFIC NAME	STATUS	DISTRIBUTION
BIRDS			
Eagle, bald	Haliaeetus leucocephalus	T*	Entire state Nest sites: (1) Mineral, (5) Hampshire, (2) Pendleton, (1) Grant, and (4) Hardy
MAMMALS			
Bat, Indiana	Myotis sodalis	E**	Known hibernacula in Tucker, Pocahontas, Greenbrier, Randolph, Preston, Pendleton, Monroe and Mercer Counties. Critical habitat: Hellhole Cave, Pendleton County - Bats may occupy summer habitat throughout the entire state
Bat, Virginia big-eared	Corynorhinus (=Plecotus) townsendii virginianus	E	Primarily northeastern counties, especially Pendleton, Tucker and Grant Counties, Also know to occur in the New River Gorge National River in Fayette County. Critical habitat: Hellhole Cave, Cave Mountain Cave, Hoffman School Cave, and Sinnitt/Thorn Mountain Cave in Pendleton Co.; Cave Hollow/Arbogast Cave in Tucker Co.
Cougar, eastern	Felis concolor cougar	E	Entire state, may be extinct
Squirrel, West Virginia northern flying	Glaucomys sabrinus fuscus	E	Pocahontas, Tucker, Grant, Pendleton, Greenbrier, Webster, and Randolph Counties, within proclamation boundary of Monongahela National Forest
MOLLUSKS			
Snail, flat-spired three-toothed land	Triodopsis platysayoides	T	Monongalia and Preston Counties, mainly in Cooper's Rock State Forest area, both sides of Cheat River Gorge
Mussel, tubercled-blossom pearly	Epioblasma (=Dysnomia) torulosa torulosa	E	Kanawha River, Fayette Co., may be extinct
Mussel, pink mucket pearly	Lampsilis abrupta (=orbiculata)	E	Kanawha River, Fayette Co., Ohio River, Cabell, Mason and Wood Counties; Elk River, Kanawha Co.
Mussel, James spiny	Pleurobema (=Canthyria) collina	E	Monroe Co., South Fork of Potts Creek and Potts Creek
Mussel, fanshell	Cyprogenia stegaria (=irrorata)	E	Kanawha River, Fayette Co.; Ohio River, Wood Co.

COMMON NAME	SCIENTIFIC NAME	STATUS	DISTRIBUTION
Mussel, clubshell	Pleurobema clava	E	Elk River, Braxton, Kanawha, and Clay Counties; Hackers Creek, Lewis Co.; Meathouse Fork, Doddridge, Co.; South Fork Hughes River, Ritchie County
Mussel, northern riffleshell	Epioblasma torulosa rangiana	E	Elk River, Kanawha Co.
PLANTS			
Harperella	Ptilimnium nodosum	E	Morgan and Berkeley Counties
Shale barren rock cress	Arabis serotina	E	Greenbrier, Hardy, and Pendleton Counties
Running buffalo clover	Trifolium stoloniferum	E	Fayette, Webster, Tucker, Pocahontas, Barbour, Brooke and Randolph Counties
Virginia spiraea	Spiraea virginiana	T	Nicholas, Fayette, Mercer, Raleigh, Summers, and Greenbrier Counties
Northeastern bulrush	Scirpus ancistrochactus	E	Berkeley and Hardy Counties
Small whorled pogonia	Isotria Medeoloides	T	Greenbrier County
AMPHIBIANS			
Cheat Mountain salamander	Plethodon nettingi	T	Pendleton, Pocahontas, Randolph, Grant and Tucker Counties

* Threatened
** Endangered

Revised March 19, 2003

U.S. Department of Energy

National Energy Technology Laboratory

December 30, 2005

Mr. Thomas R. Chapman
U.S. Fish and Wildlife Service
West Virginia Ecological Services Field Office
694 Beverly Pike
Elkins, WV 26241

Dear Mr. Chapman:

The National Energy Technology Laboratory has prepared the enclosed draft Environmental Assessment (EA) under the National Environmental Policy Act Implementing Procedures for a project to convert coal mine methane to liquefied natural gas (LNG). The project, "LNG from Coal Mine Methane for Industrial and Transportation Applications," is proposed by Appalachian-Pacific Coal Mine Methane Power Co. (Appalachian-Pacific), and would result in design, construction, and operation of a system to convert waste coal mine gas into LNG via dehydration, amine scrubbing, and refrigeration. This project will store up to 30,000 gallons of LNG on site.

The proposed system would be located at the Eastern Associated Coal Corporation's Federal Number 2 mine in Monongalia County, WV. Appalachian-Pacific would purchase coal mine methane from Northwest Fuel Development Inc., which owns the rights to the fuel. Appalachian-Pacific would construct and demonstrate a system capable of producing approximately 10,000 gallons-per-day of LNG and storing up to 30,000 gallons of LNG on site for daily transportation to industrial users and heavy vehicle and tow boat operators.

Pursuant to our NEPA implementing procedures, we are providing the enclosed document to your office for review and comment. We would appreciate receiving any comments your office may have by the close of the public comment period, January 30, 2006, to allow us to address all comments during the preparation of the final EA, which will form the basis for decision-making.

Should you require addition information, please contact me by telephone at 304-285-4641 or by e-mail at 'anthony.zammerilli@NETL.DOE.GOV.'

Sincerely,

Anthony Zammerilli
NEPA Document Manager

Enclosures

3610 Collins Ferry Road, P.O. Box 880, Morgantown, WV 26507-0880 □ 626 Cochrans Mill Road, P.O. Box 10940, Pittsburgh, PA 15236-0940
REPLY to: Morgantown Office • Anthony.Zammerilli@netl.doe.gov • Voice (304) 285-4641 • Fax (304) 285-4403 • www.netl.doe.gov

U.S. Department of Energy

National Energy Technology Laboratory

June 24, 2005

Ms. Susan Pierce
Deputy State Historic Preservation Officer
Historic Preservation Office
1900 Kanawha Boulevard East
Charleston, WV 25305-0300

Dear Ms. Pierce:

The United States Department of Energy (DOE) is considering participation in a project that would result in design, construction, and operation of an integrated gas processing and liquefied natural gas (LNG) generation system at a site in western Monongalia County, WV. The proposed project would be located on previously disturbed land adjacent to Northwest Fuel Development, Inc.'s project that your office reviewed in December of 2001 (R# 02-289-MG). The proposed system would demonstrate the feasibility of using waste coal mine methane gas to generate LNG and would be located at the Parrish Shaft property of the Federal Number 2 Mine southeast of Wadestown, WV. A description of the proposed project and graphics depicting its location are enclosed.

As part of our coordination and consultation responsibilities, and to comply with provisions implementing Section 106 of the National Historic Preservation Act of 1966, we would appreciate receiving any information you have regarding historic or cultural properties in the project area. Your thoughts on the potential impacts associated with the proposed project would also be appreciated.

Based on the scope of the proposed project, a preliminary examination of the proposed site, and the potential for the project to result in minimal environmental consequences, the DOE has initiated preparation of an Environmental Assessment under the National Environmental Policy Act. Information that you provide will be incorporated and appropriately addressed in the Environmental Assessment. If your initial review concludes that no historical or cultural properties are present in the project area, a written acknowledgement of that conclusion would be appreciated. In any case, the information that you provide will be considered in preparing a draft Environmental Assessment, which will be provided for review upon availability.

Should you require addition information, please contact me by telephone at 304-285-5443 or by e-mail at 'John.Ganz@NETL.DOE.GOV.'

Sincerely,

John Ganz
NEPA Compliance Officer

Enclosures

3610 Collins Ferry Road, P.O. Box 880, Morgantown, WV 26507-0880 □ 626 Cochrans Mill Road, P.O. Box 10940, Pittsburgh, PA 15236-0940
REPLY TO: Morgantown Office • John.Ganz@netl.doe.gov • Voice (304) 285-5443 • Fax (304) 285-4403 • www.netl.doe.gov

WEST VIRGINIA
DIVISION OF
CULTURE & HISTORY

1900 Kanawha Blvd., E.
Charleston, WV
25305-0300

Phone 304.558.0220
Fax 304.558.2779
TDD 304.558.3562
www.wvculture.org
EEO/AA Employer

July 21, 2005

Mr. John Ganz
NEPA Compliance Officer
US Dept. of Energy
3610 Collins Ferry Road
P.O. Box 880
Morgantown, WV 26507

RE: Construction and operation of an integrated gas processing and liquefied natural gas (LNG) generation system
FR#: 05-1119-MG

Dear Mr. Ganz:

We have reviewed the above mentioned project to determine its effects to cultural resources. As required by Section 106 of the National Historic Preservation Act, as amended, and its implementing regulations, 36 CFR 800: "Protection of Historic Properties," we submit our comments.

Architectural Resources:
The West Virginia State Historic Preservation Office has reviewed the proposed construction of an integrated gas processing and liquefied natural gas generation system in Monongalia County. Following review of the materials submitted, this office is of the opinion that the proposed system will have no effect to any architectural resources listed in or eligible for inclusion in the National Register of Historic Places. The site is located in a rural undeveloped area of Monongalia County. No existing structures should have a line-of-sight to the proposed project area. No further consultation is necessary with this office regarding architecture for this project.

Archaeological Resources:
A search of our office records located no known archaeological sites within a one-mile radius of the proposed project area. Information submitted for review states that proposed construction activities include the pouring of concrete pads, installation of modular equipment, and the installation of a chain link perimeter fence. It is our understanding that a 30,000 gallon storage tank that will be approximately 12 feet in diameter and 40 feet tall is proposed for the project area. Information submitted for review states that the project area has been previously impacted by ground disturbing activities and is the location of a former exhaust fan for the Federal Number 2 mine. Due to the documented disturbances, we are of the opinion that there is little possibility of intact archaeological deposits within the project area. Therefore, we have determined that no known archaeological sites listed on or eligible for inclusion in the National Register will be affected by this project. If, however, intact archaeological deposits are encountered during construction, all activity within the discovery area shall cease and our office shall be contacted immediately.

We appreciate the opportunity to be of service. *If you have questions regarding our comments or the Section 106 process, please contact Ryan Burns, Historian, or Carolyn Kender, Archaeologist, in the Historic Preservation Office at (304) 558-0240.*

Sincerely,

Lora A. Lamarre
Senior Archaeologist

LAL:rcb/cmk

U.S. Department of Energy

National Energy Technology Laboratory

December 30, 2005

Ms. Susan Pierce
Deputy State Historic Preservation Officer
Historic Preservation Office
1900 Kanawha Boulevard East
Charleston, WV 25305-0300

Dear Ms. Pierce:

The National Energy Technology Laboratory has prepared the enclosed draft Environmental Assessment (EA) under the National Environmental Policy Act Implementing Procedures for a project to convert coal mine methane to liquefied natural gas (LNG). The project, "LNG from Coal Mine Methane for Industrial and Transportation Applications," is proposed by Appalachian-Pacific Coal Mine Methane Power Co. (Appalachian-Pacific), and would result in design, construction, and operation of a system to convert waste coal mine gas into LNG via dehydration, amine scrubbing, and refrigeration. This project will store up to 30,000 gallons of LNG on site.

The proposed system would be located at the Eastern Associated Coal Corporation's Federal Number 2 mine in Monongalia County, WV. Appalachian-Pacific would purchase coal mine methane from Northwest Fuel Development Inc., which owns the rights to the fuel. Appalachian-Pacific would construct and demonstrate a system capable of producing approximately 10,000 gallons-per-day of LNG and storing up to 30,000 gallons of LNG on site for daily transportation to industrial users and heavy vehicle and tow boat operators.

Pursuant to our NEPA implementing procedures, we are providing the enclosed document to your office for review and comment. We would appreciate receiving any comments your office may have by the close of the public comment period, January 30, 2006, to allow us to address all comments during the preparation of the final EA, which will form the basis for decision-making.

Should you require addition information, please contact me by telephone at 304-285-4641 or by e-mail at 'anthony.zammerilli@NETL.DOE.GOV.'

Sincerely,

Anthony Zammerilli
NEPA Document Manager

Enclosures

3610 Collins Ferry Road, P.O. Box 880, Morgantown, WV 26507-0880 □ 626 Cochrans Mill Road, P.O. Box 10940, Pittsburgh, PA 15236-0940
REPLY to: Morgantown Office • Anthony.Zammerilli@netl.doe.gov • Voice (304) 285-4641 • Fax (304) 285-4403 • www.netl.doe.gov

This Page Intentionally Left Blank

Appendix A

Letter of Air Permit Determination for the
West Virginia Department of Environmental Protection – Division of Air Quality

This Page Intentionally Left Blank

west virginia department of environmental protection

Division of Air Quality
601 57th Street, S.E.
Charleston, WV 25304

Joe Manchin III, Governor
Stephanie R. Timmermeyer, Cabinet Secretary
www.wvdep.org

July 22, 2005

Charles D. Estes
President
Appalachian-Pacific Coal Mine Methane Power Co., LLC
5053 Glenbrook Terrace, NW
Washington, DC 20016

Re: Permit Applicability Determination
Appalachian-Pacific Coal Mine Methane Power Co., LLC
Federal Mine No. 2 – Parrish Shaft
Monongalia County
Determination No. PD05-094

Dear Mr. Estes:

It has been determined that a permit will not be required under 45CSR13 for your proposed facility that converts from 1.29 to 1.80 MMscfd of coal mine gas (CMG) into 9,200 to 10,000 gpd liquefied natural gas (LNG) by using a combination of purification and cryogenic liquefaction technologies. This determination is based on information included with your permit determination form received on June 24, 2005, which indicates that the increase in emissions will not exceed two (2) lbs/hr or five (5) tons/year of total Hazardous Air Pollutants (HAPs); six (6) lbs/hour and ten (10) TPY of any regulated; or, trigger a substantive requirement of any State or Federal air quality regulation.

Please bear in mind, however, that any additional changes to the proposed facility may require a permit under 45CSR13. Furthermore, pursuant to 45CSR13-5.14, records briefly describing the proposed change, the pollutants involved, the potential to emit for each pollutant increased or added shall be maintained by the owner or operator for at least two years and made available to the Director upon request.

Should you have any questions, please contact the undersigned engineer at (304) 926-0499 Ext. 1211.

Sincerely,

William T. Rothwell II
Permit Writer

Cc: Bill Taylor - North Central Regional Office

Promoting a healthy environment.

This Page Intentionally Left Blank

Appendix B

Letter from the Monongalia County Planning Commission
on the Determination of
County Floodplain Development Permit Requirements

This Page Intentionally Left Blank

MCPC
MONONGALIA COUNTY
PLANNING COMMISSION

180 Hart Field Road
Morgantown, WV 26505
Phn 304.291.9570
Fax 304.291.9573
www.moncpc.org

December 12, 2005

VIA EMAIL
cestes@aplng.com

Charles D. Estes, President
Appalachian-Pacific, LLC
1401 Wilson Blvd., Suit 1101
Arlington, VA 22209

RE: Floodplain Review
Parrish Shaft Site Modifications

Dear Mr. Estes:

I have received this day your request for floodplain review concerning the above referenced project. After examining your project narrative and accompanying map exhibits, I concur with the floodplain determination prepared by Mr. Jeffrey Gola of Thrasher Engineering. As your map exhibits illustrate, the two (2) proposed LNG storage equipment areas appear to be located outside the 100-year special flood hazard area (FIRM 5401390050B).

As such, a Floodplain Development Permit from this office will not be required prior to proceeding with your proposed project. However, additional permitting approvals may be required from other federal, state, and local agencies, i.e., State Department of Environmental Protection, State Division of Highways, etc.

Should you have additional questions or require further clarification, please do not hesitate to contact me.

Sincerely,

Christopher M. Fletcher, AICP
Director of Planning
director@moncpc.org

Planning Commissioners:
Nancy J. Teel, Ph.D., President
Chris Iordi, Vice President
Gary Ashdown, J.D.
Robert D. Beach, WV House of Delegates
Robert L. Bell, County Commissioner
Allen Colebank
Luther Dempsey, P.E., L.S.
Kathy Friend
Edward Hawkins
Allen B. Judy
Paul Nesselroad
Beth Mullen

Director of Planning:
Christopher M. Fletcher, AICP