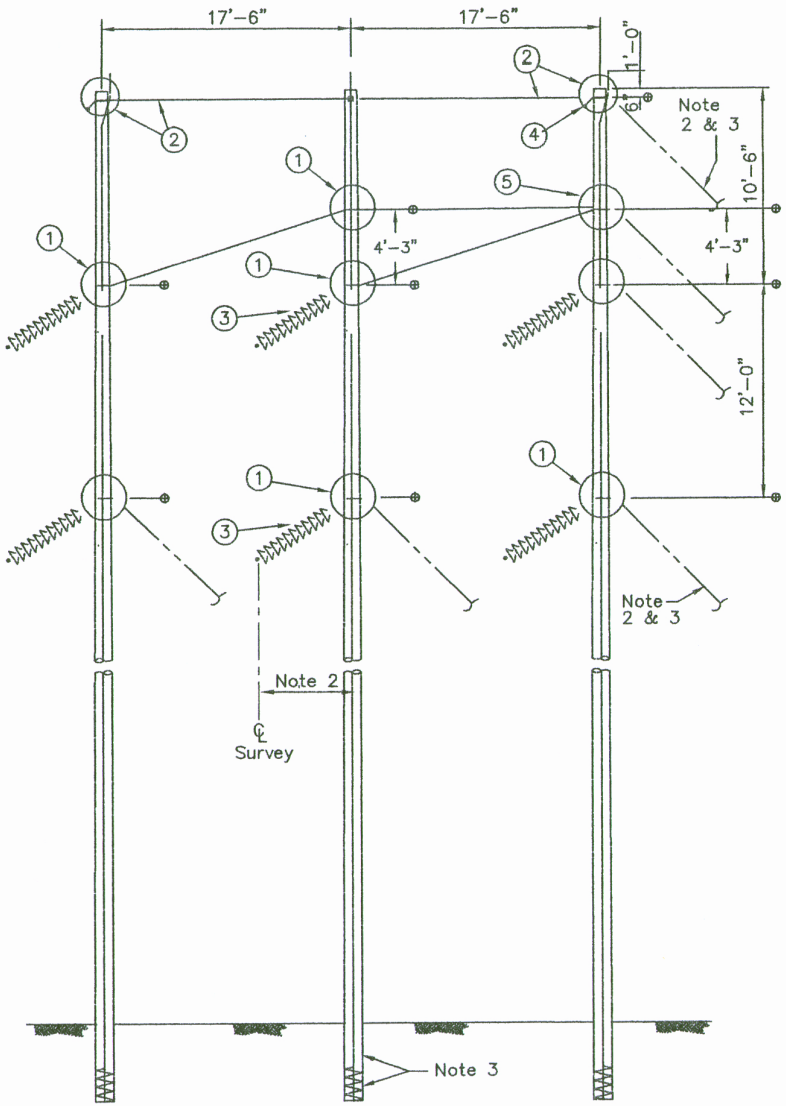

LIST OF MATERIALS

DWG. REF.	QTY.	DESCRIPTION	ITEM	DET.	CODE No.
1	7	GUY ATTACHMENT, MEDIUM DUTY	–	TG–26D	
2	2	POLE TIE, LARGE ANGLE, MEDIUM DUTY	–	TG–56A	
3	6	INSULATOR ASSEMBLY, ANGLE	–	TM–5B	
4	2	OHGW ASSEMBLY, ANGLE	–	TM–4A	
5	1	GUY ATTACHMENT, MEDIUM DUTY	–	TG–26E	

NOTES:

1. Drawing TE–2 gives guidence to subassembly alternatives.
2. For guying arrangements and offset table, see drawing TMG–14. Pole spacing shall conform to minimum dimensions unless otherwise indicated.
3. The following materials are to be specified on plan and profile drawings and staking sheets: POLES, POLE GROUNDING ASSEMBLY, GUYING ASSEMBLIES, ANCHORS, AND ANY ADDITIONAL GROUNDING OR POLE FOUNDATION UNITS.

PATTERSON AND ELLETT

TRANSMISSION LINE STRUCTURE

138 KV DOUBLE CIRCUIT STRUCTURE
LARGE ANGLE

NO.	REVISION	DATE

DTH–14

NAME: G:\BV\Mexico\ACAD\ DTH14.DWG DATE: APR 18, 2000 TIME: 11:20 AM

Reissued 03/98