DOE/EA-1471

Environmental Assessment for the Transportation of Highly Enriched Uranium from the Russian Federation to the Y-12 National Security Complex and Finding of No Significant Impact

January 2004

U.S. Department of Energy • National Nuclear Security Administration

FINDING OF NO SIGNIFICANT IMPACT FOR THE TRANSPORTATION OF HIGHLY ENRICHED URANIUM FROM THE RUSSIAN FEDERATION TO THE Y-12 NATIONAL SECURITY COMPLEX

ISSUED BY: United States Department of Energy

ACTION: Finding of No Significant Impact

SUMMARY:

The United States (U.S.) Department of Energy (DOE) proposes to transport highly enriched uranium (HEU) from Russia to a secure storage facility in Oak Ridge, TN. This proposed action would allow the United States and Russia to accelerate the disposition of excess nuclear weapons materials in the interest of promoting nuclear disarmament, strengthening nonproliferation, and combating terrorism. The HEU would be used for a non-weapons purpose in the U.S. – as fuel in research reactors performing solely peaceful missions.

The amount of HEU to be transferred under the proposed action would be, on average, 166 kilograms (366 pounds) per year over a period of 10 years. The entire shipping campaign would be conducted under very high security. The Russian Federation would be responsible for packaging the material in appropriate packages that meet international and U.S. safety standards. The Russian Federation would also be responsible for transporting the material to a point of transfer, which could be in Russia or a cooperating European country. The U.S. would then take possession of the material and assume responsibility for its security and transport. The proposed action is to transport the HEU by U.S. military aircraft from Russia or a cooperating European country to the McGhee Tyson Air National Guard Base near Knoxville, TN, then by Safe Secure Transport/SafeGuards Transportation (SST/SGT) to the Y-12 National Security Complex (Y-12 Complex) in Oak Ridge, TN.

DOE has prepared an environmental assessment (EA) for this proposed action, the *Environmental Assessment for the Transportation of Highly Enriched Uranium from the Russian Federation to the Y-12 National Security Complex (DOE/EA-1471).* Two action alternatives to the proposed action were evaluated in the EA: 1) air transport to Dover Air Force Base near Dover, DE, then SST/SGT transport to the Y-12 Complex and 2) ship transport to a mid-Atlantic military port, then SST/SGT transport to the Y-12 Complex. Based on the analysis in this EA, DOE has elected to implement either the proposed action or the alternative of air transport to the Dover Air Force Base. Further, DOE has determined that this is not a major action significantly affecting the quality of the environment, and thus, does not require the preparation of an Environmental Impact Statement.

A draft of the EA was sent to the States of Tennessee and Delaware for review. Comments received from the State of Tennessee were considered in finalizing the EA.

FOR FURTHER PROJECT INFORMATION AND/OR COPIES OF DOE/EA-1471, CONTACT:

Ms. Janie B. Benton
Russian HEU Programs
NA-23/Germantown Building
U.S. Department of Energy
1000 Independence Avenue, SW
Washington, DC 20585-1290

FOR FURTHER INFORMATION ABOUT DOE'S NATIONAL ENVIRONMENTAL POLICY ACT PROCESS, CONTACT:

Ms. Carol Borgstrom
Office of NEPA Policy and Guidance
EH-42/Forrestal Building
U.S. Department of Energy
1000 Independence Avenue, SW
Washington, DC 20585

SUPPLEMENTAL INFORMATION:

Background

The proposal to remove weapons-usable fissile material from the Russian stockpile and apply it to a peaceful purpose is one action in a long line of continuing efforts to support the common interest of the United States and Russia in guaranteeing the irreversibility of nuclear disarmament, strengthening nonproliferation, and combating terrorism by accelerating the disposition of excess nuclear weapons materials. The *Agreement Between the Government of the United States of America and the Government of the Russian Federation Concerning the Disposition of Highly Enriched Uranium Extracted From Nuclear Weapons* (HEU-LEU Agreement) was signed on February 18, 1993. This agreement, which remains in force until 2013, was developed to further arms control and nonproliferation efforts of the United States and the Russian Federation. The HEU-LEU Agreement provides for the United States' purchase of low enriched uranium (LEU) derived from 500 metric tons (551 tons) of HEU extracted from Russian nuclear weapons.

In September 2002, Secretary of Energy Spencer Abraham and Russian Minister of Atomic Energy Alexander Rumyantsev issued a Joint Statement regarding a number of initiatives that could lead to further reductions of HEU inventories. One of these initiatives involves using Russian HEU to fuel selected U.S. research reactors. A supplement to the HEU-LEU Agreement is being negotiated for this purpose. The proposed action or an alternative analyzed in this EA is necessary to implement this initiative.

Proposed Action

Under the proposed supplement to the HEU-LEU Agreement regarding fuel for research reactors, the U.S. would purchase 166 kilograms (366 pounds) of HEU per year, on average, over a 10-year period, from the Russian Federation. The HEU would come from existing Russian stock. The Russian Federation would be responsible for ensuring that the chemical and isotopic composition of the material conforms with agreed-to technical specifications such that it would be usable as fuel for the research reactors and would meet the Y-12 Complex acceptance criteria for storage. A procurement contract

implementing the supplement to the HEU-LEU Agreement would allow U.S. employees or contractors to observe the packaging of HEU into containers for shipment and the sealing of the containers.

The EA analyzes transporting up to two years' worth, or 332 kilograms (732 pounds), of HEU at a time. The proposed action includes the use of any of three shipping containers, depending on their availability. The containers range in payload from 7 kilograms (15.4 pounds) up to 14 kilograms (30.9 pounds) of HEU. All of these containers are certified Type B packages that would meet the International Atomic Energy Agency Safety Standard Series no. TS-R-1, *Regulations for the Safe Transport of Radioactive Material.*

The location at which the U.S. would take possession of the material has not yet been determined, but it could be St. Petersburg, another location in Russia, or a location in Europe. The specific location will be the subject of negotiation among the involved countries, but the EA analyzed an air travel distance sufficient to accommodate any of these locations. The EA evaluates impacts associated with transportation of the HEU within the U.S. and on the global commons, those areas of the Earth outside the jurisdiction of any nation (e.g., the ocean). The U.S. intends to secure permission for overflight of any countries that must be traversed if an aircraft is used to transport HEU to the U.S. Packaging of the material and transportation to the location at which the U.S. would take possession would be the responsibility of the Russian Federation. The EA does not evaluate the impacts of actions taken in Russia or from the overflight of any other foreign nations.

The proposed action is to use U.S. military C-17 aircraft to transport the HEU. Depending on the departure and arrival points, it may be necessary to refuel the aircraft once during each flight. KC-135 tanker aircraft operated by the U.S. military would perform the in-air refueling operation. C-5 or C-141 aircraft could also be used. All three of these aircraft have adequate payload capacity and cargo holds capable of accommodating the required number of HEU containers.

The proposed action is to transport the HEU by air to McGhee Tyson Air National Guard Base in Tennessee. Alternative 1 involves an alternative aerial port of entry: Dover Air Force Base in Delaware. Alternative 2 involves transport by ship to a representative mid-Atlantic military port. From any of these port(s) of entry, the HEU would travel by trucks with special security measures to the Y-12 Complex in Tennessee.

The proposed action involves the use of existing infrastructure in the way of airfields, ports, handling equipment, and roadways. The EA does not analyze in detail the potential impacts to biological, cultural, geological, or water resources or to socioeconomics. Since there would be no construction or processing of any sort, there would be no land disturbance that could potentially affect biota, cultural resources, or geologic media. No water would be withdrawn or discharged to surface water or groundwater. The proposed action would not have any appreciable effect on socioeconomic conditions at any of the analyzed locations. All work would be accomplished making temporary use of existing personnel. The duration of the personnel involvement would be a relatively small portion of any given year, avoiding the need to add to the workforce.

DOE expects to store the HEU for 1 to 2 years. Following any preparation necessary to make it compatible with fabrication equipment, Y-12 Complex personnel would send it from the Y-12 Complex in Oak Ridge, TN to the BWX Technologies facility in Lynchburg, VA, where it would be fabricated into

reactor fuel. Following fabrication, the fuel would be transported to the research reactors[1] for use. Managing the HEU at the Y-12 Complex, transporting it from the Y-12 Complex to the BWX Technologies facility, fabricating the HEU into fuel, transporting the fuel to the reactors, and operating the reactors are all ongoing actions whose environmental impacts have been addressed previously.

Resolution of Comments Received

A draft of the EA was sent for comment to the States of Tennessee and Delaware. In response to comments received from the State of Tennessee after reviewing a draft, the following changes were made to the EA:

- Reference to "pre-processing" HEU at the Y-12 National Security Complex has been eliminated to avoid the impression that there is significant processing work being performed. The text now refers to preparing the HEU so that it is compatible with the equipment at the fuel fabrication plant and notes that the preparation work is addressed under other NEPA documentation (i.e., the *Final Site-Wide Environmental Impact Statement for the Y-12 National Security Complex*).
- The discussion of the aircraft landing accident has been revised to make it clear that the analysis assumes failure of all of the containers and to explicitly state the amount of material that is released to the atmosphere.
- The ground transportation accident analysis discussion has been revised to state that it was assumed that the vehicle transporting the HEU travels at 55 miles per hour regardless of whether it is traveling in a rural, suburban, or urban setting. This replaces an inaccurate statement implying the maximum speed limit is 55 miles per hour.

These changes were made to improve the clarity and accuracy of the document. They did not result in any changes to the analysis of the environmental impacts.

Environmental Impacts

The analysis in the EA shows that the proposed transfer of HEU from Russia to the United States entails little or no risk to the quality of the environment or to human health. This is true independent of the port of departure from Russia or Europe and the aerial port of entry into the United States, i.e., the proposed action of landing at the McGhee Tyson Air National Guard Base or the alternative of landing at the Dover Air Force Base. It is also true independent of the choice of containers or the choice of aircraft. The HEU would be transported in Type B containers that meet both United States and International Atomic Energy Agency standards. There would be an average of one shipment per year, which would represent a very small increase in the number of airplanes crossing the Atlantic Ocean every year. The necessary ground transportation to the Y-12 Complex also represents a very small increase in the normal amount of truck traffic and associated risks of a traffic accident.

The radiological risks to the public and workers from normal operations and accident conditions under the proposed action and the two action alternatives would be very small. Assuming the transport of 332 kilograms (732 pounds) in a single shipment, under the proposed action of air transport to the McGhee Tyson Air National Guard Base, the increased risk of a latent cancer fatality (LCF) in the population would be 1.8×10^{-7}. The largest population risk of developing an LCF associated with

[1]*Fuel will be provided to the following research reactors: the National Bureau of Standards Research Reactor, National Institute of Standards and Technology, Gaithersburg, MD; the Massachusetts Institute of Technology Research Reactor, Cambridge, MA; the University of Missouri Research Reactor, Columbia, MO; and the High Flux Isotope Reactor, Oak Ridge National Laboratory, Oak Ridge, TN.*

radioactive materials released from an accident, an aircraft crash during landing, is 2.6×10^{-10}. For the alternative of landing at the Dover Air Force Base, the risk of developing an LCF from normal operations and accident conditions would be 5.1×10^{-6} and 1.8×10^{-10}, respectively. These population risk numbers are much less than 1, indicating that no increases in latent cancer fatalities in the population would be expected as a result of these activities.

The impact on a maximally exposed member of the public would be greater for ground transportation than it would be for normal or accident conditions at an airfield. Regardless of the alternative, the maximally exposed individual member of the public would experience an increased chance of developing an LCF equal to 1.4×10^{-10}, or less than one chance in a billion, for normal ground transportation operations. Under severe traffic accident conditions, the radiological risk to the maximally exposed individual, regardless of the alternative, would be 1.8×10^{-13}, or less than 1 chance in a trillion.

DOE estimates that the greatest risk to the public is the risk of a traffic fatality during ground transportation. The estimated traffic fatality risk is 2.2×10^{-6} for the proposed action and 6×10^{-5} for the alternative involving transport from Dover Air Force Base.

Worker radiological risk for the proposed action would be 3.8×10^{-7} for a member of the air transport crew and 2.6×10^{-7} for a member of the ground transport crew. For the alternative of landing at the Dover Air Force Base, the radiological risk to a member of the air transport crew is slightly less, 3.4×10^{-7}, and the risk to a member of the ground transport crew is larger, 7.1×10^{-6}. Under either the proposed action or the Dover Air Force Base alternative, the dose to a worker transferring packages of HEU from the aircraft to the SST/SGT would be about 6×10^{-6}. For each of these cases, the risk of a latent cancer fatality is less than 1 in 140,000.

DETERMINATION:

The proposed action is to transfer 166 kilograms (366 pounds) of HEU per year, on average, over a 10-year period from Russia to the United States. The proposed action of air transport to the McGhee Tyson Air National Guard Base and the alternative of air transport to the Dover Air Force Base, followed by ground transport to the Y-12 Complex, have been analyzed for as much as 332 kilograms (732 pounds) in a single trip. Both the proposed action and the alternative entail minor impacts and low risks and do not constitute a major federal action significantly affecting the quality of the human environment within the meaning of the National Environmental Policy Act. Therefore, based upon the analysis in the EA, an Environmental Impact Statement is not required.

Issued this 15 day of January 2004, in Washington, D.C.

Linton F. Brooks
Administrator
National Nuclear Security Administration
United States Department of Energy

TABLE OF CONTENTS

Finding of No Significant Impact for the Transportation of Highly Enriched Uranium From the Russian Federation to the Y-12 National Security Complex i

Acronyms and Abbreviations ix
1.0 Introduction 1
1.1 Framework for the Proposed Action 1
1.2 Key Issues Addressed 3
1.3 Relationship to Other DOE NEPA Documents 4
2.0 Purpose and Need for Action 5
3.0 Description of Alternatives 5
3.1 Proposed Action – Transport to McGhee Tyson Air National Guard Base 8
3.2 Alternative 1 – Transport to Dover Air Force Base 10
3.3 Alternative 2 – Ship Transport 10
3.4 No Action Alternative 11
3.5 Alternatives Considered but Not Evaluated 11
3.5.1 Alternate Storage Location 11
3.5.2 Alternate Air Carrier 12
4.0 Affected Environment 12
4.1 Global Commons 12
4.1.1 Baltic Sea 13
4.1.2 North Sea 14
4.1.3 Atlantic Ocean 14
4.2 McGhee Tyson Air National Guard Base, TN 15
4.3 Dover Air Force Base, DE 16
5.0 Potential Environmental Impacts 18
5.1 Impacts of Proposed Action 19
5.1.1 Air Transportation 20
5.1.2 Ground Transportation 25
5.1.3 Environmental Justice 29
5.1.4 Cumulative Impacts 30
5.2 Impacts of Alternative 1 – Transport to Dover Air Force Base 30
5.2.1 Alternative 1 Impacts from Air Transport 31
5.2.2 Alternative 1 Impacts from Ground Transportation 31
5.3 Impacts of Alternative 2 – Transport by Ship 32
5.3.1 Alternative 2 Impacts from Ship Transportation 32
5.3.2 Alternative 2 Impacts from Ground Transportation 35
5.4 Impacts of the No Action Alternative 36
6.0 References 37

APPENDICES

Appendix A Agreement Between the Government of the United States of America and the Government of the Russian Federation Concerning the Disposition of Highly Enriched Uranium Extracted from Nuclear Weapons A-1

Appendix B Joint Statement Secretary Abraham and Minister Rumyantsev B-1

LIST OF FIGURES

Figure 3–1 Transport Would Be from Russia or Europe to an Aerial Port of Entry Near Knoxville, TN or Dover, DE or a Marine Port Such as Norfolk, VA or Charleston, SC 7
Figure 3–2 Ground Transport Would Be from McGhee Tyson Airport Near Knoxville, TN or Dover Air Force Base in DE 8
Figure 3–3 TN-BGC1 Transportation Package Includes Confinement/Containment Barriers and a Protective Cage 9
Figure 3–4 ES-2100 Transportation Package Uses a 55-Gallon Stainless Steel Drum as the Outer Confinement Layer 10
Figure 3–5 5X22 Shipping Container 11

Figure 4–1 Region Around McGhee Tyson Air National Guard Base and the Y-12 Complex 16
Figure 4–2 Region Around Dover Air Force Base 17

Figure 5–1 Configuration of 2 Layers of 55-Gallon Size Packages in a Cargo Restraint Transporter 22

LIST OF TABLES

Table 3–1 HEU Specifications 6
Table 3–2 Representative Air Travel Distances 7

Table 4–1 Oceanic Concentrations of Naturally Occurring Radioisotopes 13

Table 5–1 Human Health Impacts from Incident-Free Air Transport 22
Table 5–2 Human Health Impacts of a Severe Landing-Stall-Fire Accident from Air Transport of 332 Kilograms of HEU 24
Table 5–3 Truck Route Characteristics for Ground Transport 26
Table 5–4 Human Health Impacts from Incident-Free Ground Transportation 27
Table 5–5 Population Health Impacts from Potential Ground Transport Accidents 28
Table 5–6 MEI Health Impacts from Potential Ground Transport Accidents 29
Table 5–7 Estimated Annual Cumulative Radiological Impacts 30
Table 5–8 Differences in Transportation Risks Between Alternative 1 and the Proposed Action 31
Table 5–9 Differences in Transportation Risks Between Alternative 2 and the Proposed Action 34

Acronyms and Abbreviations

CFR	*Code of Federal Regulations*
CO	carbon monoxide
DOE	U.S. Department of Energy
EA	environmental assessment
EIS	environmental impact statement
EPA	U.S. Environmental Protection Agency
ES-2100	DOE/NNSA shipping container
HEU	highly enriched uranium
in	inches
LCF	latent cancer fatality
LEU	low enriched uranium
MACCS2	MELCOR Accident Consequence Code System, Version 1.12
MEI	maximally exposed individual
mm	millimeter
NAAQS	National Ambient Air Quality Standards
NEPA	National Environmental Policy Act
NNSA	National Nuclear Security Administration
NO_2	nitrogen dioxide
O_3	ozone
Pb	lead
PM_x	particulate matter less than x microns in diameter
SO_2	sulfur dioxide
SST/SGT	Safe Secure Transports/SafeGuards Transports
TI	Transportation Index
TN-BGC1	Transnucleaire shipping container
U_3O_8	uranium oxide
U.S.	United States
Y-12 Complex	NNSA Y-12 National Security Complex
5X22	BWX Technologies shipping container

1.0 Introduction

The U.S. Department of Energy (DOE), National Nuclear Security Administration (NNSA) has prepared this environmental assessment (EA) pursuant to the National Environmental Policy Act (NEPA), DOE implementing regulations at 10 *Code of Federal Regulations* (CFR) 1021, and Council on Environmental Quality regulations at 40 CFR 1500-1508. It evaluates the potential environmental impacts associated with the transport of highly enriched uranium (HEU) derived from the Russian Federation nuclear stockpile to the NNSA Y-12 National Security Complex (Y-12 Complex) near Oak Ridge, TN.

The United States and the Russian Federation share a mutual interest in providing security for weapons-usable fissile materials to prevent the proliferation of nuclear weapons. To that end, the United States and Russia are evaluating mechanisms by which excess fissile materials can be removed from their respective stockpiles and rendered unattractive as weapons materials. The two countries propose to augment the actions being undertaken under an existing agreement to remove additional HEU from the Russian stockpile. A supplement to the agreement would provide for United States purchase of Russian HEU for use as fuel in United States research reactors performing solely peaceful missions.

1.1 Framework for the Proposed Action

The proposal to remove weapons-usable fissile material from the Russian stockpile and apply it to a peaceful purpose is one action in a long line of continuing efforts to support the common interest of the United States and Russia in guaranteeing the irreversibility of nuclear disarmament, strengthening nonproliferation, and combating terrorism by accelerating the disposition of excess nuclear weapons materials.

Highly Enriched Uranium-Low Enriched Uranium (HEU-LEU) Agreement Background

The *Agreement Between the Government of the United States of America and the Government of the Russian Federation Concerning the Disposition of Highly Enriched Uranium Extracted From Nuclear Weapons* was signed on February 18, 1993 (see Appendix A). This agreement, which remains in force until 2013, was developed to further arms control and nonproliferation efforts of the United States and the Russian Federation, with a specific goal of facilitating the objectives of the *Treaty on the Nonproliferation of Nuclear Weapons* of July 1, 1968.

The HEU-LEU Agreement provides for United States purchase of low enriched uranium (LEU) derived from 500 metric tons (551 tons) of HEU extracted from Russian nuclear warheads (the equivalent of approximately 20,000 nuclear warheads) dismantled as a result of the reduction of nuclear weapons through arms control agreements and other commitments. The Russian Federation blends HEU (in this case, uranium with an average assay of 90 weight percent or greater of the isotope uranium-235) with other uranium to yield LEU with a maximum assay of 20 weight percent of uranium-235. LEU is purchased by a U.S. corporation for use in the fabrication of commercial nuclear reactor fuel. As of December 31, 2002, 171 metric tons (189 tons) of weapons-grade HEU had been converted to 5,027 metric tons (5,542 tons) of LEU. This is equivalent to the elimination of approximately 6,850 nuclear warheads.

Supplementary Nonproliferation Efforts—To further the efforts of nonproliferation and national security associated with keeping weapons-usable nuclear materials out of the hands of hostile nations and terrorists, President George W. Bush and Russian President Vladimir Putin signed a Joint Declaration during their May 2002 summit in Moscow, Russia (Bush 2002). The Joint Declaration established a Joint Expert Group

to examine means to further reduce stockpiles of weapons-usable nuclear materials beyond the levels set forth in existing agreements.

In September 2002, Secretary of Energy Spencer Abraham and Russian Minister of Atomic Energy Alexander Rumyantsev issued a Joint Statement regarding the work of the Joint Expert Group on Accelerated Nuclear Material Disposition (see Appendix B). The Joint Expert Group identified a number of initiatives that could lead to reduction of HEU beyond commitments already in place. Among these initiatives are two proposed as separate supplements to the existing 1993 HEU-LEU Agreement. One is the creation of a strategic stockpile (reserve) in the United States from Russian HEU down-blended into LEU. The second is the use of Russian HEU to fuel selected United States research reactors until their cores are converted to operate on LEU. Unlike the original agreement, the second supplement proposes transferring uranium to the United States in its highly enriched form.

An initiative to accelerate development of low enriched fuel for use in both Soviet-designed and United States-designed research reactors has been proposed in parallel with the initiative to use Russian HEU in research reactors.

The proposed supplement to the HEU-LEU Agreement regarding fuel for research reactors is to provide for the United States to purchase 166 kilograms (366 pounds) of HEU per year, on average, over a 10-year period, from the Russian Federation. HEU, with an average assay of 93 percent or greater of uranium-235, would come from existing Russian stock. The Russian Federation would be responsible for ensuring that the chemical and isotopic composition of the material conforms with agreed-to technical specifications such that it would be usable as fuel for the research reactors and that it meets the Y-12 Complex acceptance criteria for storage. Contracts implementing the supplemental agreement would provide for U.S. employees or contractors to observe the packaging of HEU into containers for shipment and the sealing of the containers. HEU would be utilized to manufacture fuel for the following research reactors:

- the National Bureau of Standards Research Reactor located at the National Institute of Standards and Technology in Gaithersburg, MD;
- the Massachusetts Institute of Technology Research Reactor located at the Massachusetts Institute of Technology in Cambridge, MA;
- the University of Missouri Research Reactor located at the University of Missouri in Columbia, MO; and
- the High Flux Isotope Reactor located at the Oak Ridge National Laboratory in Oak Ridge, TN.

A projection of the amount of HEU needed to provide fuel for these reactors has been made. It is estimated that 177 kilograms (390 pounds) of HEU would be needed the first year and 166 kilograms (366 pounds) would be required in subsequent years. The proposed supplemental agreement provides for the purchase of 166 kilograms (366 pounds) of HEU per year, on average, but allows for consolidation of more than 1 year's HEU purchase to facilitate efficient shipping. Therefore, more than 166 kilograms (366 pounds) can be transferred to meet the first year's anticipated research reactor fuel needs.

Reason for the Supplemental Agreement

The proposed supplemental agreement for transfer of HEU for research reactor fuel complements ongoing United States-Russian cooperation under the existing HEU-LEU Agreement by concentrating on areas not covered by the original agreement. Thus, it provides for more rapid disposition of HEU. Both the HEU-LEU

Agreement and the proposed supplemental agreement fulfill similar nonproliferation and national security-related objectives:

- Providing safe and prompt disposition, for peaceful purposes, of HEU that exceeds defense requirements;
- Preventing the theft or diversion of HEU by hostile nations and terrorists;
- Providing for the fulfillment of all applicable nonproliferation, materials protection control and accountability, and environmental requirements of each party; and
- Providing funds to the Russian Federation for the conversion of defense enterprises, enhancing the safety of nuclear power plants, and environmental clean-up of contaminated areas.

1.2 Key Issues Addressed

This EA addresses environmental impacts associated with the transportation of HEU over the Atlantic Ocean to the NNSA Y-12 Complex. Transportation modes included in the analysis are aircraft or ship transport and ground transport by truck.

The location at which the U.S. would take possession of the material has not yet been determined, but could be St. Petersburg, another location in Russia, or a location in Europe. This EA evaluates impacts associated with transportation of HEU within the United States and over the global commons, that is, those areas of the Earth that are outside the jurisdiction of any specific nation. The United States intends to secure permission for overflight of any countries that must be traversed if an aircraft is used to transport HEU to the United States. Packaging of the material and transportation to the location at which the United States takes possession would be the responsibility of the Russian Federation. The EA does not evaluate the impacts of actions taken in Russia or from the overflight of any foreign nations.

The Proposed Action involves the use of existing infrastructure in the way of airfields, ports, handling equipment, and roadways. This EA does not analyze in detail the potential impacts to biological, cultural, geological, or water resources or to socioeconomics. Since there would be no construction or processing of any sort in the Proposed Action, there would be no land disturbance that could potentially affect biota, cultural resources, or geologic media. No water would be withdrawn or discharged to surface or groundwaters. The Proposed Action would not have any appreciable effect on socioeconomic conditions at any of the analyzed locations. All work would be accomplished making temporary use of existing personnel. The duration of personnel involvement would be a relatively small portion of any given year, avoiding the need to add to the workforce.

The EA analysis ends at the point the trucks bearing HEU arrive at the Y-12 Complex. Activities that occur at the Y-12 Complex, such as unloading HEU, transferring it to a storage location, and monitoring it while in storage, are within the scope of the *Final Site-Wide Environmental Impact Statement for the Y-12 National Security Complex (Y-12 Site-Wide EIS)* (DOE 2001) and therefore are not addressed in this document.

NNSA expects to store the HEU for 1 to 2 years. Following any preparations necessary to make the HEU compatible with fabrication equipment, Y-12 Complex personnel would send it to the BWX Technologies facility in Lynchburg, VA, where it would be fabricated into reactor fuel. Following fabrication, the fuel would be transported to the listed research reactors for use. Preparing the HEU and transporting it from the Y-12 Complex to the BWX Technologies facility, fabricating HEU into fuel, transporting the fuel to the reactors, and operating the reactors are all ongoing actions whose environmental impacts have been addressed previously in licensing and other documentation.

1.3 Relationship to Other DOE NEPA Documents

The *Environmental Assessment for the Purchase of Russian Low Enriched Uranium Derived from the Dismantlement of Nuclear Weapons in the Countries of the Former Soviet Union (HEU-LEU Agreement EA)*, DOE/EA-0837 (USEC 1994), was prepared to evaluate the impacts of the 1993 HEU-LEU Agreement. DOE issued a finding of no significant impact associated with the purchase, the ship and truck transport of LEU derived from up to 500 metric tons (551 tons) of Russian HEU to the United States, and making the material available for fuel fabrication. The current action supplements the purchase of 500 metric tons (551 tons) of HEU, but was not included in the original assessment.

Two supplemental agreements that involve separate and independent means of augmenting the HEU-LEU Agreement are under consideration. The supplemental agreement to purchase and transfer additional LEU for use as a U.S. strategic stockpile (reserve) involves transportation and environmental impacts similar to those addressed in the *HEU-LEU Agreement EA*. HEU would be blended with other uranium to a low enrichment, then the LEU would be transported by ship to the United States. The supplemental agreement that is the basis for the Proposed Action assessed in this EA is for the purchase and transport of uranium that is different in nature from that assessed in the *HEU-LEU Agreement EA*. The uranium would be transported in its highly enriched form rather than being down-blended to a low enrichment prior to transfer. The Proposed Action assessed in this EA is separate from any potential action to purchase additional LEU as a strategic stockpile (reserve), and it has its own separate utility.

DOE previously made a decision regarding the storage location of HEU. The *Storage and Disposition of Weapons-Usable Fissile Materials Final Programmatic Environmental Impact Statement*, DOE/EIS-0229 (DOE 1996a), included evaluation of various programmatic alternatives for providing secure storage of fissile materials. The scope of the analysis included storage of 994 metric tons (1,096 tons) of HEU. Subsequently, DOE issued the January 21, 1997 Record of Decision (62 FR 3014) that named the Y-12 Complex as the central repository for storage of HEU, such as the HEU that would be acquired from the Russian Federation under the Proposed Action.

The *Y-12 Site-Wide EIS* evaluated the impacts associated with various levels of operational activities. The scope of that EIS included Y-12 Complex support to the Nuclear Nonproliferation and National Security Program. In the March 13, 2002 Record of Decision (67 FR 11296), DOE announced its decision to implement its planning basis alternative, which meets mission requirements, including storage of HEU and the construction of two new facilities (including the HEU Materials Facility for storage of HEU). The Y-12 Complex currently has six buildings that are used for storage of HEU. The *Y-12 Site-Wide EIS* addresses onsite management of activities associated with HEU, including the receipt and unloading of Safe Secure Transports/SafeGuards Transports (SST/SGTs)[2] and the transfer of HEU into storage. Therefore, those activities are not addressed in this EA.

Two previous actions that are similar to the Proposed Action have been analyzed in EAs. The *Environmental Assessment for Project Partnership – Transportation of Foreign-Owned Enriched Uranium from the Republic of Georgia*, DOE/EA-1255 (DOE 1998), evaluated the environmental impacts of transporting 5.26 kilograms (11.6 pounds) of HEU from the Republic of Georgia to the United Kingdom. The transported material consisted primarily of unirradiated fuel, but did contain less than a kilogram of partially spent fuel.

---

[2]*Safe Secure Transports and SafeGuards Transports (SST/SGTs) are specially designed tractor-trailers used for transporting nuclear materials. The vehicles feature enhanced structural support and highly reliable tie-down systems to protect cargo from impact; heightened thermal resistance to protect the cargo in case of fire; deterrents to protect against unauthorized removal of cargo; and an armored tractor with advanced communications equipment.*

The similarity to this EA is that the *Project Partnership EA* evaluated the impact on the global commons associated with U.S. military air transport of HEU. The Department found that there was no significant impact from the action.

The *Environmental Assessment for the Proposed Interim Storage at the Y-12 Plant Oak Ridge, Tennessee of Highly Enriched Uranium Acquired from Kazakhstan by the United States*, DOE/EA-1006 (DOE 1994a), evaluated the environmental impacts of transporting 566 kilograms (1,248 pounds) of HEU contained in 2,200 kilograms (2.4 tons) of material from Kazakhstan to the Y-12 Complex. The assessment's scope included transport by military aircraft over the global commons to an aerial port of entry, transfer from the aircraft to SST/SGTs, ground transportation by SST/SGTs, and transfer from the SST/SGTs to the Y-12 Complex. The aerial ports of entry included the same air fields addressed in this EA. DOE made a finding of no significant impact associated with the air-land transportation of the Kazakhstan HEU. Because the action evaluated in the *Kazakhstan EA* parallels the current Proposed Action, data and analyses from that document will be summarized and used where applicable and appropriate in this EA.

2.0 Purpose and Need for Action

In the interest of promoting nuclear disarmament, strengthening nonproliferation, and combating terrorism, the United States and Russia are accelerating the disposition of excess nuclear weapons materials. The two countries are pursuing development of supplements to the 1993 HEU-LEU Agreement that would further reduce the Russian HEU stockpile. One such supplement proposes the United States purchase and transfer, on average, 166 kilograms (366 pounds) per year of HEU from the Russian Federation over a period of 10 years. Pending its fabrication and use as research reactor fuel, the HEU would be placed in a secure storage facility at the Y-12 Complex.

In order to effect the proposed transaction, the United States needs to transport the HEU from a location in Russia or Europe to the storage facility in this country. This transportation is the subject of this EA. The Russian Federation would package HEU in transport containers meeting International Atomic Energy Agency and United States standards and deliver it to a location at which the United States would take possession of the material and assume responsibility for its security and transport. Security concerns dictate that once the United States takes possession of the material, it should be transported to the storage facility as expeditiously as practical.

3.0 Description of Alternatives

As discussed in Section 1.0, the United States and the Russian Federation are working cooperatively to reduce the threat of nuclear proliferation by managing excess fissile materials in a manner that makes them unusable for nuclear weapons. The Proposed Action being addressed by this EA is the transfer of, on average, 166 kilograms (366 pounds) per year over a period of 10 years, of HEU from Russia to the United States. Although the agreement is based on an average of 166 kilograms (366 pounds) per year, the NNSA may increase the quantity shipped in a year, if funding allows, to make transportation more efficient. To address the possibility of shipping 2 years' worth of material, the analysis also addresses shipment of 332 kilograms (732 pounds) of HEU in a year.

The action would include U.S. military air transport of the packaged material to the United States, transfer of the material to an SST/SGT, and overland transport by SST/SGT to the Y-12 Complex. Potential environmental and human health impacts of offloading the SST/SGT and storage at the Y-12 Complex are included in Chapter 5 of the *Y-12 Site-Wide EIS* (DOE 2001) and are not addressed in this EA.

The Russian Federation would be responsible for providing HEU that meets the technical specifications agreed to by the two countries (see **Table 3–1)**. The uranium would be enriched natural uranium, mixed with small amounts of recycled uranium, and would have a negligible amount of other actinides[3] and fission products. The chemical form of the material would be uranium oxide (U_3O_8) powder or uranium metal. For purposes of analysis in this EA, the uranium is assumed to be transported as an oxide. This is conservative because it results in more containers and because the oxide would be more readily dispersed than cast metal. In order to transfer 166 kilograms (366 pounds) of HEU in the oxide form, a shipment would consist of about 196 kilograms (432 pounds) of powder. Russia would also be responsible for packaging the material in appropriate Type B packages that meet the International Atomic Energy Agency Safety Standard Series No. TS-R-1, *Regulations for the Safe Transport of Radioactive Material* (IAEA 2000). Russia would transport the material to the location from which the United States aircraft or ship would depart. A range of ports of departure are possible, with the final location being decided through negotiations between the Russian Federation and the United States. Examples of the range of possible arrangements include: (1) Russia would transport the material to an airfield near the current storage location of the material and a United States military aircraft would depart from that airfield; (2) Russia would transport the material by truck, train, or aircraft to a port or an airfield near St. Petersburg, Russia, from which a ship or United States military aircraft would depart; or (3) Russia would transport the material by aircraft to a port or an airfield in a European country that would agree to host the transfer, and from which a ship or United States military aircraft would depart.

Table 3–1 HEU Specifications

Uranium Isotope	*Percent of Total Uranium*
Uranium-234	1.20
Uranium-235	93.00
Uranium-236	0.46
Uranium-238	5.34

This EA evaluates the potential impacts on the global commons, that is, the portion of the Earth that does not belong to a specific country. For this particular action, the global commons would include international waters and airspace that would be traversed by the transport ship or aircraft.

The action addressed by this EA is part of the United States-Russian program to prevent the proliferation of nuclear weapons. The HEU being transported would be attractive to those wanting to acquire nuclear materials and therefore would be shipped under very high security. In order to prepare this EA as an unclassified document so that it is available to interested members of the public, specific information about the routing and security surrounding the transportation of the material is not included. Rather, information is included that bounds the actions to be taken and provides a basis for distinguishing between the environmental effects of the alternatives evaluated.

In the case of air transportation of HEU, the specific location of departure is not particularly important because the evaluation of environmental impacts starts at the point where the aircraft enters the global commons. For purposes of this assessment, a specific route was not evaluated, but the distance for air travel was selected based on the distance from St. Petersburg, Russia to the United States aerial port of entry. The linear distance from St. Petersburg was increased by 25 percent to allow for variations in the actual flight path (see **Table 3–2**). Because of the 25 percent additional mileage and the fact that part of that distance

[3]*Actinides are elements with atomic numbers of 89 (actinium) or greater. Uranium and plutonium are actinides.*

might not be over the global commons (i.e., could be over the airspace of a European country), this approach bounds the distance within the global commons that would actually be traveled by air (see **Figure 3–1**).

Table 3–2 Representative Air Travel Distances

Alternative	*Flight to* [a]	*Total Air Travel*	
		Kilometers [b] *(miles)*	*Time* [c] *(hr:min)*
Proposed Action	McGhee Tyson Air National Guard Base	9,800 (6,100)	12:15
Alternative 1	Dover Air Force Base	8,900 (5,500)	11:00

[a] It is assumed that flights start at St. Petersburg, Russia for all action alternatives. Since the EA analysis does not start until entering the global commons, the place of origin in western Russia or Europe is not significant.
[b] The flight distance is sufficient to accommodate any reasonable routes. Distance is the direct distance from St. Petersburg plus 25 percent, rounded to the nearest 160 kilometers (100 miles).
[c] Flight times are based on a nominal cruising speed of 805 kilometers per hour (500 miles per hour) for a C-17 aircraft. Times are rounded up to the next quarter hour.

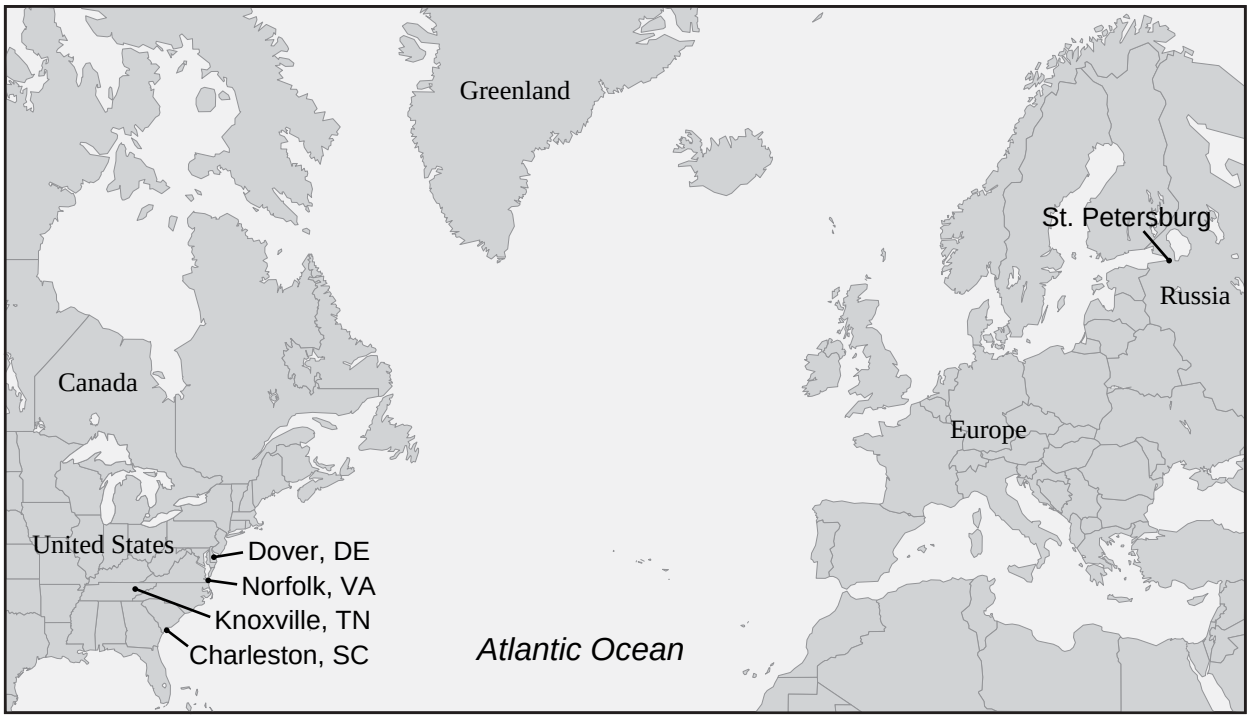

Figure 3B1 Transport Would Be from Russia or Europe to an Aerial Port of Entry Near Knoxville, TN or Dover, DE or a Marine Port Such as Norfolk, VA or Charleston, SC

In the case of ship transport of the HEU, the port of departure is assumed to be St. Petersburg, Russia. For purposes of this analysis, a specific route was not evaluated, but the ocean crossing time for vessels transporting LEU for the HEU-LEU Program was used. Ships transporting LEU generally take 14 to 20 days to cross the mid-Atlantic to a U.S. port, so a 21-day crossing time is used.

To assess the impacts from ground transportation of the material, the specific routing of the material is not analyzed. Instead, representative routes are selected for analysis (see **Figure 3–2**).

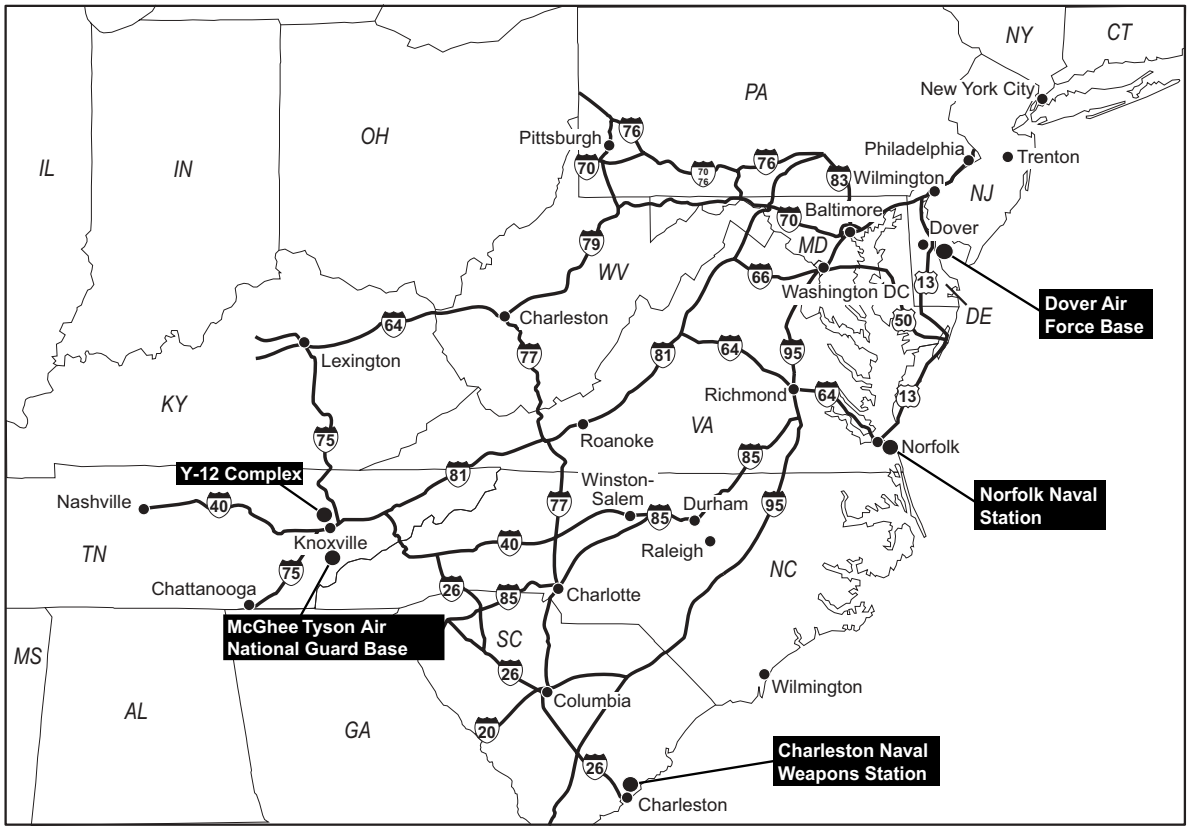

Figure 3B2 Ground Transport Would Be from McGhee Tyson Airport Near Knoxville, TN or Dover Air Force Base in DE

3.1 Proposed Action – Transport to McGhee Tyson Air National Guard Base

The Proposed Action for transferring the Russian HEU to the Y-12 Complex is to transport it in a military C-17 Globemaster III aircraft to the McGhee Tyson Air National Guard Base near Knoxville, TN. The Air National Guard Base is located at the McGhee Tyson Airport. The material would be transferred to an SST/SGT in a secure area of the base and then transported to the Y-12 Complex at the Oak Ridge Reservation. McGhee Tyson Air National Guard Base is the nearest major airfield to the Oak Ridge Reservation, so its use minimizes the ground transportation required.

This alternative includes the use of any of three shipping packages, depending on their availability. Of the three packages, the TN-BGC1 (see **Figure 3–3**) has the smallest payload. It is limited to carrying 7 kilograms (15.4 pounds) of uranium-235, so transport of the 166 kilograms (366 pounds) of HEU has been conservatively estimated as requiring 24 shipping packages. Shipping sufficient HEU to meet 2 years' needs (332 kilograms [732 pounds]) would require 48 packages. The ES-2100 shipping package (see **Figure 3–4**) has the largest payload of the three containers. In the following analysis, it was assumed that about twice the amount of material that could be packaged in a TN-BGC1 would fit in an ES-2100 (14 kilograms [30.9 pounds]). Therefore, shipping 332 kilograms (732 pounds) of HEU in ES-2100s would require half the number of packages (24) that would be needed if the TN-BGC1 were used (48). The third package, the 5X22 (see **Figure 3–5**), has a payload that falls in between the payloads of the other two packages, 9 kilograms (19.8 pounds) of uranium-235. The impacts of using the 5X22 package would fall in between

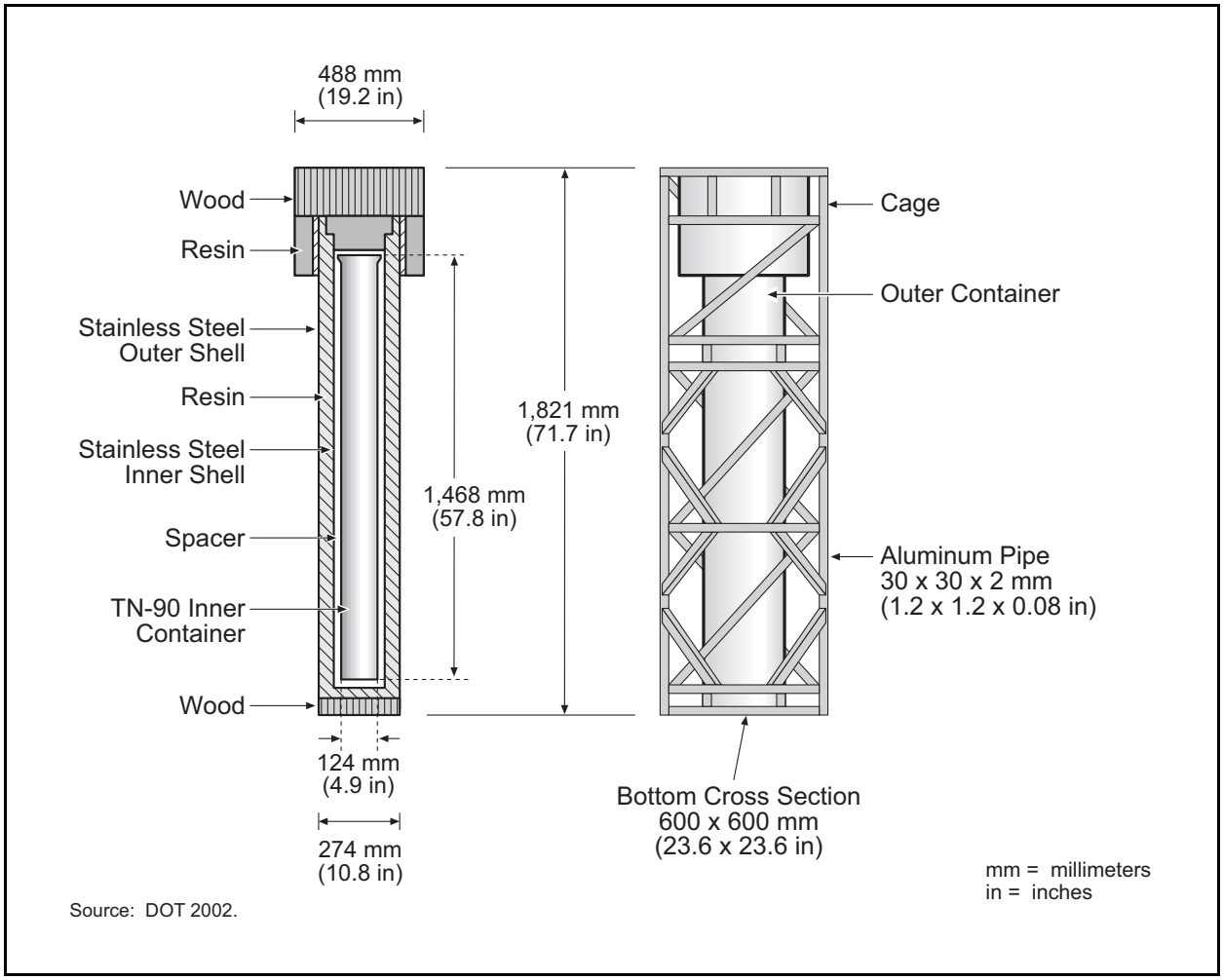

Figure 3B3 TN-BGC1 Transportation Package Includes Confinement/Containment Barriers and a Protective Cage

the results calculated for the other two packages and therefore are not explicitly evaluated in the following analysis.

The C-17 aircraft has a payload of 77,520 kilograms (170,900 pounds) and can land and take off from a runway as short as 915 meters (3,000 feet). The cruising speed is about 805 kilometers per hour (500 miles per hour). With an unrefueled range of about 9,600 kilometers (5,970 miles), it may be necessary to refuel the aircraft to complete a trip estimated to be up to 9,800 kilometers (6,100 miles). Refueling would be accomplished in air using KC-135 tanker aircraft. The KC-135s would depart from their airfields, rendevous with the C-17, then return to their airfields upon completion of the refueling. In-air refueling is a routine practice for U.S. military aircraft and the involved personnel are experienced in its execution.

Although the Proposed Action is to use a C-17 aircraft for air transport of the material, an alternative military aircraft could be used. The C-5 and the C-141 have the payload capacity and cargo holds capable of accommodating the required number of TN-BGC1, 5X22, or ES-2100 packages. Either of these aircraft may also need to be refueled to make a direct flight from Russia or Europe to the United States.

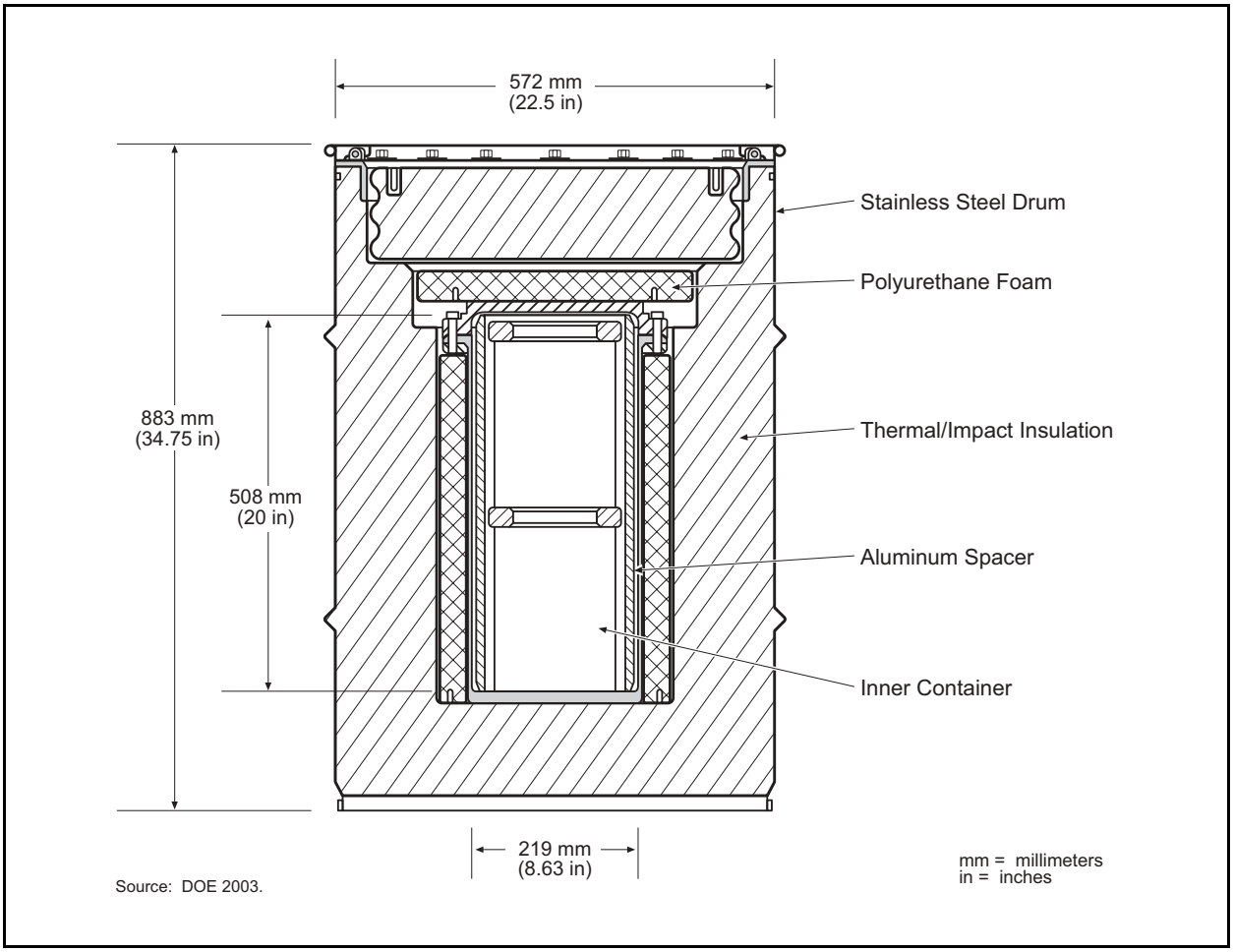

Figure 3B4 ES-2100 Transportation Package Uses a 55-Gallon Stainless Steel Drum as the Outer Confinement Layer

3.2 Alternative 1 – Transport to Dover Air Force Base

An alternative to flying into the McGhee Tyson Air National Guard Base would be to fly to another military airfield that could provide a secure area for making the transfer from the aircraft to the SST/SGT.

Dover Air Force Base (near Dover, DE) is presented as an alternative aerial port of entry from which the material could be transported by SST/SGT to the Y-12 Complex. Under this alternative, the amount of time and distance flying over land is reduced; and, therefore, the distance and time for ground transportation is increased.

3.3 Alternative 2 – Ship Transport

An alternative to transporting the HEU by military aircraft to an airfield would be transporting it by ship. Under this alternative, HEU that had been packaged by the Russian Federation and transported to St. Petersburg would be loaded on a ship. The same packages described for the Proposed Alternative would be used for ship transport. The ship would transport the materials through the global commons to a mid-Atlantic U.S. military port such as the Norfolk Naval Station (Virginia) or the Charleston Naval Weapons

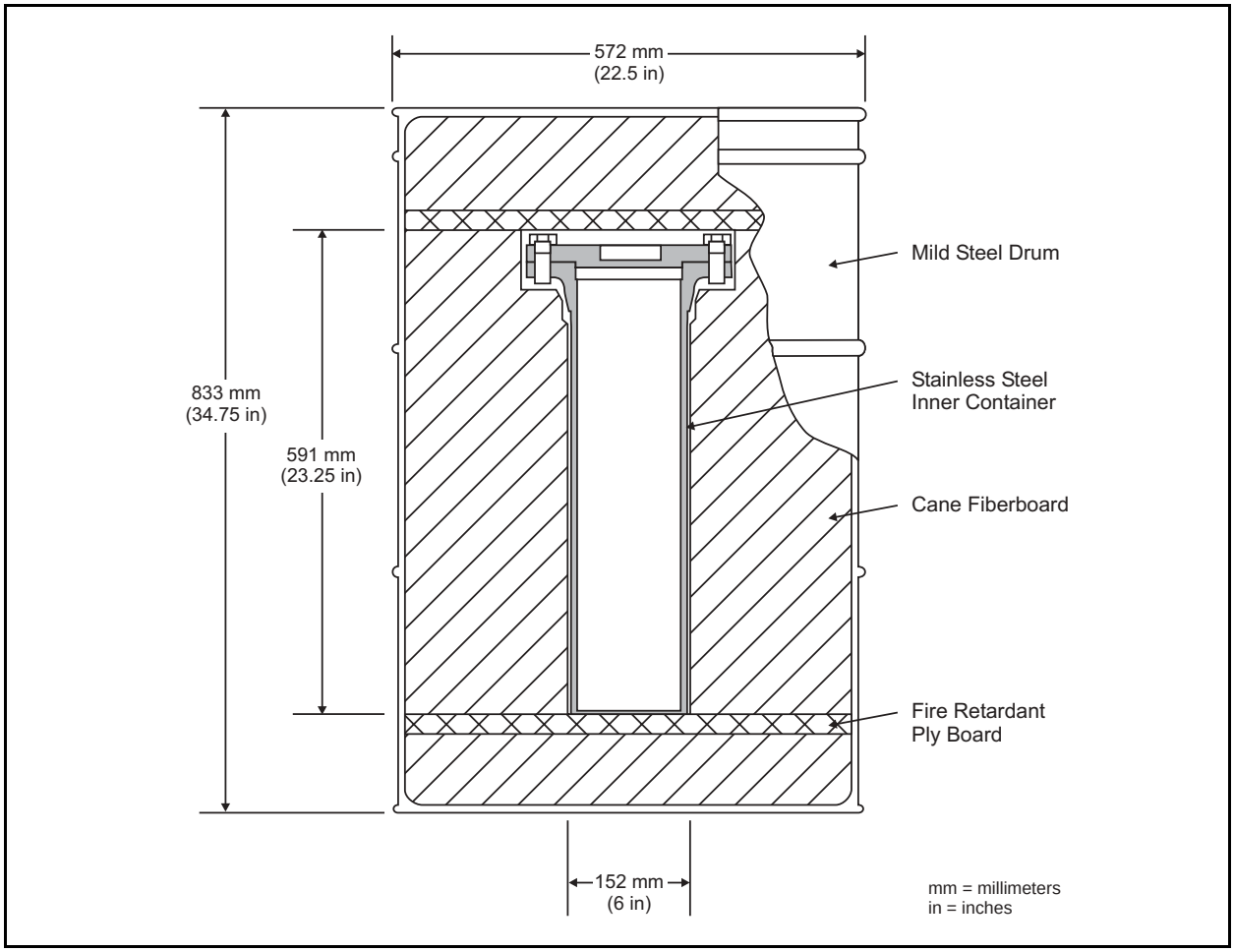

Figure 3B5 5X22 Shipping Container

Station (South Carolina). From the port, the packages of HEU would be transported by SST/SGT to the Y-12 Complex where they would be placed in storage.

3.4 No Action Alternative

Under the No Action Alternative, the HEU would remain in Russia and not be packaged and transported to the Y-12 Complex. This alternative does not meet the objective of making this excess HEU unavailable for nuclear weapons by bringing it to the United States, where it would be consumed as fuel in U.S. research reactors.

3.5 Alternatives Considered but Not Evaluated

A number of other alternatives were recognized as physically possible, but were not evaluated in detail because they are inconsistent with decisions that have been made by the U.S. Government regarding nuclear security.

3.5.1 Alternate Storage Location

In the *Record of Decision for the Storage and Disposition of Weapons-Usable Fissile Materials Final Programmatic Environmental Impact Statement* (62 FR 3014) (DOE 1997), DOE indicated its intent to

continue the storage of weapons-usable HEU at the Y-12 Complex. Storing weapons-usable HEU at a single location enhances security while minimizing the costs of storage. Since HEU that would be transported under the Proposed Action needs only to be temporarily stored until it is used in the fabrication of research reactor fuel, it is not reasonable to develop separate capabilities at an alternate location.

3.5.2 Alternate Air Carrier

In lieu of a United States military aircraft, a United States commercial, Russian commercial, or Russian military aircraft could be used to transport the uranium. The air transport portion of the impacts for these alternate carriers would be similar to those of using U.S. military aircraft. However, under each of these alternatives, the U.S. Government would relinquish some degree of control over the material, posing a security concern when the aircraft enters U.S. airspace. Therefore, all of these alternatives were recognized as having impacts comparable to those analyzed, but providing less assurance of safety and security, and were not analyzed in more detail.

4.0 Affected Environment

This section describes the affected environment of those areas potentially impacted by the Proposed Action, including the global commons, McGhee Tyson Air National Guard Base, and Dover Air Force Base. The descriptions of affected environment presented in this section provide the context for understanding the environmental consequences described in Section 5, Potential Environmental Impacts. As such, they serve as a baseline against which any changes resulting from implementation of the Proposed Action and alternatives can be identified and evaluated.

4.1 Global Commons

Transport of HEU could involve crossing the Baltic and North Seas and the Atlantic Ocean (see Figure 3–1). Thus, this section describes the global commons, specifically the ocean environment. Unless otherwise noted, material presented in this section is from the *Environmental Assessment for the Proposed Interim Storage at the Y-12 Plant Oak Ridge, Tennessee of Highly Enriched Uranium Acquired from Kazakhstan by the United States* (DOE 1994a).

Although the salinity of seawater is around 35 parts per thousand, it is generally lower in high latitudes and higher in low latitudes. Seawater contains the majority of the known elements. A significant feature of seawater is that while the total concentration of dissolved salt varies from place to place, the ratios of the more abundant components remain almost constant. This may be taken as evidence that, over geologic time, the oceans have become well mixed.

Naturally occurring radionuclides are present in seawater and in marine organisms at concentrations generally greater than in terrestrial ecosystems. The ocean water concentrations of a number of isotopes are shown in **Table 4–1**. The high natural radionuclide levels make ocean ecosystems the highest background-radiation domains in the biosphere.

Radionuclides have been discharged into the oceans since 1944. In 1981, it was estimated that the total input of radionuclides, essentially from waste disposal and nuclear weapons testing, approached 0.7 percent of the natural radioactivity present in the oceans. The total inventory of natural radioactivity in the oceans is approximately 5.0×10^{11} curies.

Table 4–1 Oceanic Concentrations of Naturally Occurring Radioisotopes

Radionuclide	*Concentration (picocuries per liter)*
Carbon-14	1.8
Potassium-40	486
Rubidium-87	3
Thorium-232	540
Tritium	3
Uranium-234	1.30
Uranium-235	0.05
Uranium-238	1.20

Source: DOE 1996b
Note: 1 picocurie = 1.0×10^{-12} curies

The relationship between environmental concentrations of radionuclides and the concentration found in organisms is important in the study of food web effects. Bioaccumulation, the increase in concentration in organisms progressively further up the food web, is observed in marine ecosystems. In the marine environment, uranium has not been found to bioaccumulate in fish and only slightly bioaccumulates in crustaceans and mollusks.

The deep-sea bottom dwellers, or benthos, are highly diverse, with many taxonomic groups being represented there by more species than most shallow-water communities. However, the number of individual organisms in a given area decreases in the deep seas and this, together with a general tendency for the average size of the organisms to also decrease, results in a dramatic reduction in standing stock or biomass on the deep ocean floor. In round figures, the total wet weight of bottom-living organisms decreases from 10 to 100 grams per square meter (0.2 to 2.3 pounds per square foot) on the continental shelf, to 1 to 10 grams per square meter (0.02 to 0.2 pounds per square foot) on the continental slope, and to only 0.1 to 1.0 grams per square meter (.002 to 0.02 pounds per square foot) on the abyssal plain.

4.1.1 Baltic Sea

The Baltic Sea is a relatively shallow inland sea surrounded by the countries of northeastern Europe and Scandinavia. Its total area is about 370,000 square kilometers (143,000 square miles). While its mean depth is 55 meters (180 feet), its maximum depth is 460 meters (1,510 feet). The Baltic Sea is connected to the North Sea through narrow and shallow sounds between Denmark and Sweden. The outlet consists of a series of basins separated by shallow sills that obstruct efficient water exchange. Consequently, it takes 25-35 years for all the water from the Baltic Sea to be replenished by water from the North Sea and beyond (Estonian Ministry of Environment 2003).

The environmental conditions of the Baltic Sea are defined by the fresh water input from rivers and precipitation, and by the limited inflow of more saline water from the North Sea. Without the constant, although small influx of saline water through the Danish straits, the Baltic Sea would have been transformed into a fresh water lake long ago. A clear salinity gradient exists from the almost oceanic conditions in the southern portion of the sea to the almost fresh water conditions in the northern portions (Estonian Ministry of Environment 2003).

In addition, a salinity barrier exists between the surface and the seabed of the Baltic Sea. Saline water, which is naturally heavier than fresh water, flows along the bottom of the sea. The fresh water on the surface does not mix appreciably with the saline water underneath. As a result, a marked stratification of salinity exists throughout the Baltic Sea at a depth of about 40 to 70 meters (131 to 230 feet). The salinity barrier prevents

the exchange of substances (i.e., oxygen, nutrients, and pollutants) between the two layers. The environmental conditions between the two layers are, thus, vastly different. Due to the limited water exchange, oxygen-poor water predominates near the bottom of many parts of the Baltic Sea, resulting in the bottom of much of the sea being virtually lifeless (Estonian Ministry of Environment 2003).

4.1.2 North Sea

The North Sea is a semi-enclosed sea in the northeast Atlantic between Great Britain and the continent of Europe. The North Sea covers an area of about 570,000 square kilometers (220,000 square miles). It is relatively shallow with an average depth of about 94 meters (310 feet); however, depth increases northward and in areas it is more than 730 meters (2,400 feet) deep (DOE 1998).

The North Sea is connected to the Atlantic Ocean by the English Channel to the south and a passage between the Orkney Islands and Norway to the north. Water circulation in the North Sea generally follows a counterclockwise pattern driven by the south-flowing waters from the North Atlantic, the northeasterly current entering from the English Channel, and the Baltic Current. Coupled with the shallow depths, these currents make the sea turbulent and especially subject to the effect of winter gales. The residence time of the North Sea waters is about 1 to 2 years, making it relatively well flushed (DOE 1998).

4.1.3 Atlantic Ocean

Within the northern hemisphere, waters of the Atlantic Ocean generally flow in a clockwise direction. In the western Atlantic, the Gulf Stream carries ocean waters in a generally northerly direction until they reach Cape Hatteras. At this point, the Gulf Stream turns eastward and continues in a northeasterly direction until it meets the southward flowing Labrador Current in the vicinity of the Grand Banks of Newfoundland. Flow across the North Atlantic is from west to east. Once waters reach the European continent, they flow both north (via the Norwegian Current) and south (via the Canaries Drift). Upon reaching the northwest coast of Africa, the North Equatorial Current flows westward toward the Caribbean Sea. The circular flow of the Atlantic creates the Central North Atlantic Eddy, or what is also known as the Sargasso Sea (Coker 1962).

Flow within the Gulf Stream is as high as 26×10^6 cubic meters (918×10^6 cubic feet) per second as it passes through the Florida Straits (Coker 1962). Within the North Atlantic, flows are around 5.0×10^6 cubic meters (177×10^6 cubic feet) per second for waters crossing the Iceland-Scotland Ridge, and for those flowing from the Greenland Sea through the Denmark Strait. Within the Gulf Stream, salinity is relatively high, averaging 35 to 36.5 parts per thousand; however, within the Sargasso Sea it is even higher, averaging 38 parts per thousand (Coker 1962).

The Northern Right Whale (*Eubalaena glacialis*) is a federally endangered species that is also protected internationally under the International Convention for the Regulation of Whaling. There are currently about 300 right whales left in the North Atlantic Ocean. Ship strikes are responsible for up to half of the known deaths of right whales in recent years. Calving right whales usually winter in the waters between Savannah, GA and West Palm Beach, FL (NOAA 2003a). Right whales are sighted year round in an area off the coast of Massachusetts (IMO 1998).

The North American continental shelf, which averages 65 kilometers (40 miles) wide and less than 200 meters (660 feet) deep, has the greatest biomass concentration in the Atlantic Ocean and is where most fisheries are located. The deep ocean is an average of 4 kilometers (2.5 miles) deeper than the continental shelf.

4.2 McGhee Tyson Air National Guard Base, TN

The McGhee Tyson Air National Guard Base is located at the McGhee Tyson Airport. McGhee Tyson Airport is one of five major air carrier airports in the state of Tennessee, and is located in Blount County, about 30 miles southeast of Oak Ridge, TN (see **Figure 4–1**). It is adjacent to the corporate limits of Alcoa, TN, and approximately 16 kilometers (10 miles) southwest of the Knoxville Central Business District (DOE 1994a). The airport is situated on 910 hectares (2,250 acres) of land and has 2 parallel 2,740-meter (9,000-foot) runways. In 2000, the airport handled over 1.7 million passengers (MKAA 2003). There are an average of 149,000 aircraft operations per year at the airport, including all categories of aircraft (AirNav, LLC 2003). McGhee Tyson Airport is categorized in the National Plan of Integrated Airport Systems as a medium-haul commercial service airport. This category does not restrict or prevent its use by general aviation or military aircraft. Fuel storage and fueling services for general aviation, air cargo, and the airlines are handled onsite by fixed base operators (DOE 1994b).

McGhee Tyson Airport shares its airfield facilities with the 134th Air Refueling Group of the Tennessee Air National Guard and the Army Aircraft Support Facility (DOE 1994a). The 134th Air Refueling Group presently operates 10 KC-135E tankers and its mission is to train, equip, and maintain units and individuals to meet worldwide requirements for Federal day-to-day and mobilization missions and State emergencies (Global Security 2002). The Tennessee Air National Guard occupies 131 hectares (323 acres) on the west side of the airport. There are about 40 structures that support the operation of the Air National Guard, including an aircraft rescue and fire-fighting facility. The Air National Guard and the Metropolitan Knoxville Airport Authority have an agreement to share rescue and fire-fighting equipment and services as required (DOE 1994a). Over 16,000 military aircraft operations take place at McGhee Tyson Airport each year (AirNav, LLC 2003).

Population

The population of Blount County is 105,823, while that of Knox County, located just to the north, is 382,032. These figures represent 1.9 and 6.7 percent of the population of Tennessee. Knoxville, the nearest major city to McGhee Tyson Air National Guard Base, has a population of 173,890 (DOC 2003). The population within an 80-kilometer (50-mile) radius of the airfield is 1,081,825. A workforce of 723 full-time personnel manages day-to-day activities; however, on two weekends per month, the population increases to 1,700 during military training assemblies (Global Security 2002).

Air Quality

As directed by the Clean Air Act of 1970 (42 U.S.C. Sect 7401), the U.S. Environmental Protection Agency (EPA) has set National Ambient Air Quality Standards (NAAQS) for several criteria pollutants to protect human health and welfare (40 CFR 50). These pollutants include particulate matter less than 10 microns in diameter (PM_{10}), particulate matter less than 2.5 microns in diameter ($PM_{2.5}$), sulfur dioxide (SO_2), carbon monoxide (CO), nitrogen dioxide (NO_2), lead (Pb), and ozone (O_3). The area around McGhee Tyson Airport is in attainment for the NAAQS. The nearest area not in attainment is Atlanta, GA, for ozone. Attainment status designations have not been promulgated for PM_{10} or $PM_{2.5}$. Blount County is designated by EPA (40 CFR 81.343) as:

- "Better than national standards" for SO_2,
- "Unclassifiable/attainment" for CO and O_3,
- "Cannot be classified or better than national standards" for NO_2, and
- "Not designated" for Pb.

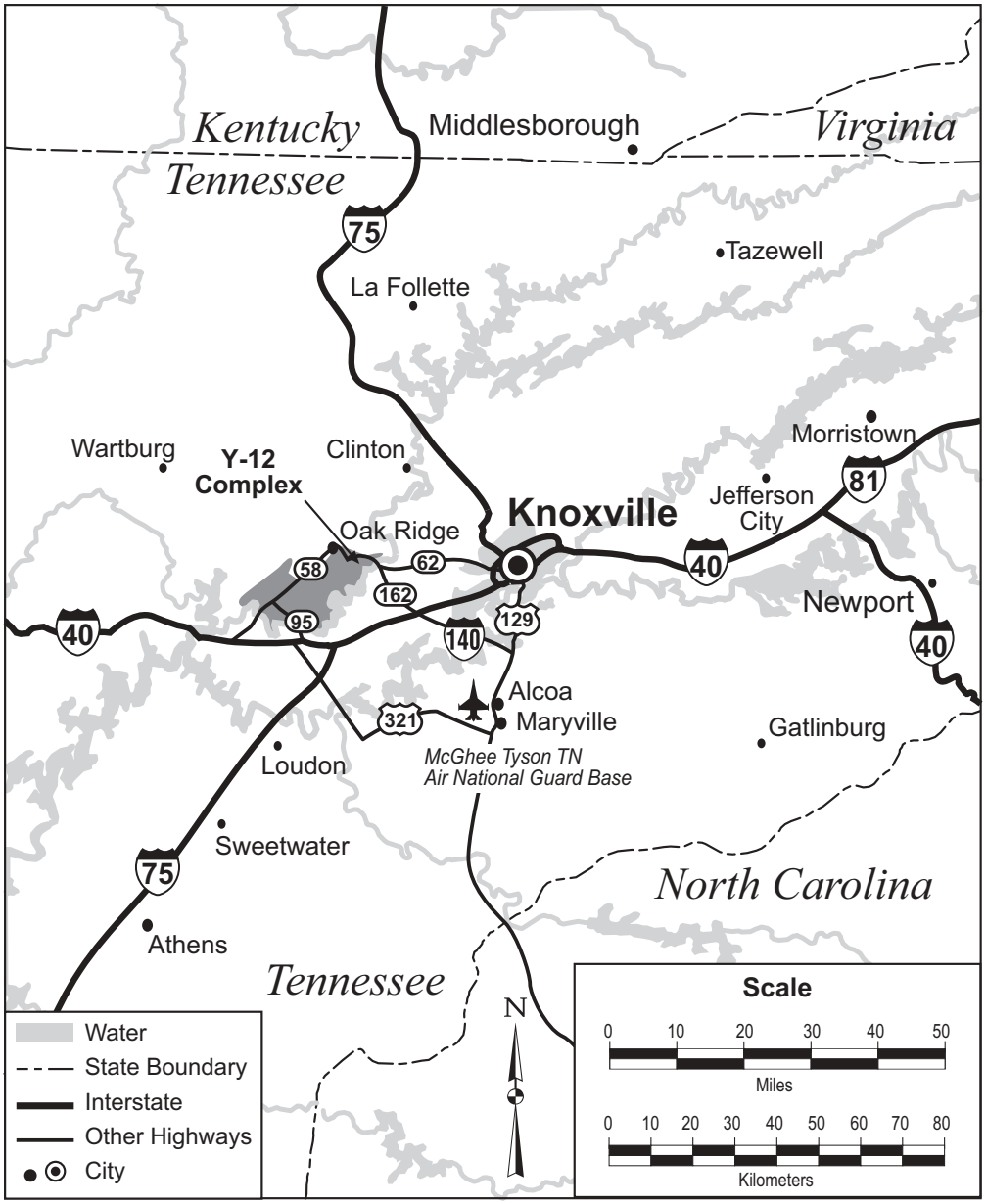

Figure 4B1 Region Around McGhee Tyson Air National Guard Base and the Y-12 Complex

4.3 Dover Air Force Base, DE

Dover Air Force Base is located in Kent County, DE, approximately 5.6 kilometers (3.5 miles) southeast of the city of Dover and 1.6 kilometers (1 mile) west of Delaware Bay (see **Figure 4–2**). The Base is about 80 kilometers (50 miles) south of Wilmington, DE, and 129 kilometers (80 miles) southwest of Philadelphia, PA (DOE 1994a). Dover Air Force Base covers about 1,580 hectares (3,900 acres), and has 1,700 buildings (436th Airlift Wing 2003). Dover Air Force Base has two runways that are 2,930 meters (9,600 feet) and 3,930 meters (12,900 feet) in length (Delaware River and Bay Authority 2003).

Dover Air Force Base is the home of the 436th Airlift Wing and, since 1973, has been the only all C-5 Galaxy aircraft base in the Air Mobility Command (DOE 1994a). The 36 C-5s present on the base provide

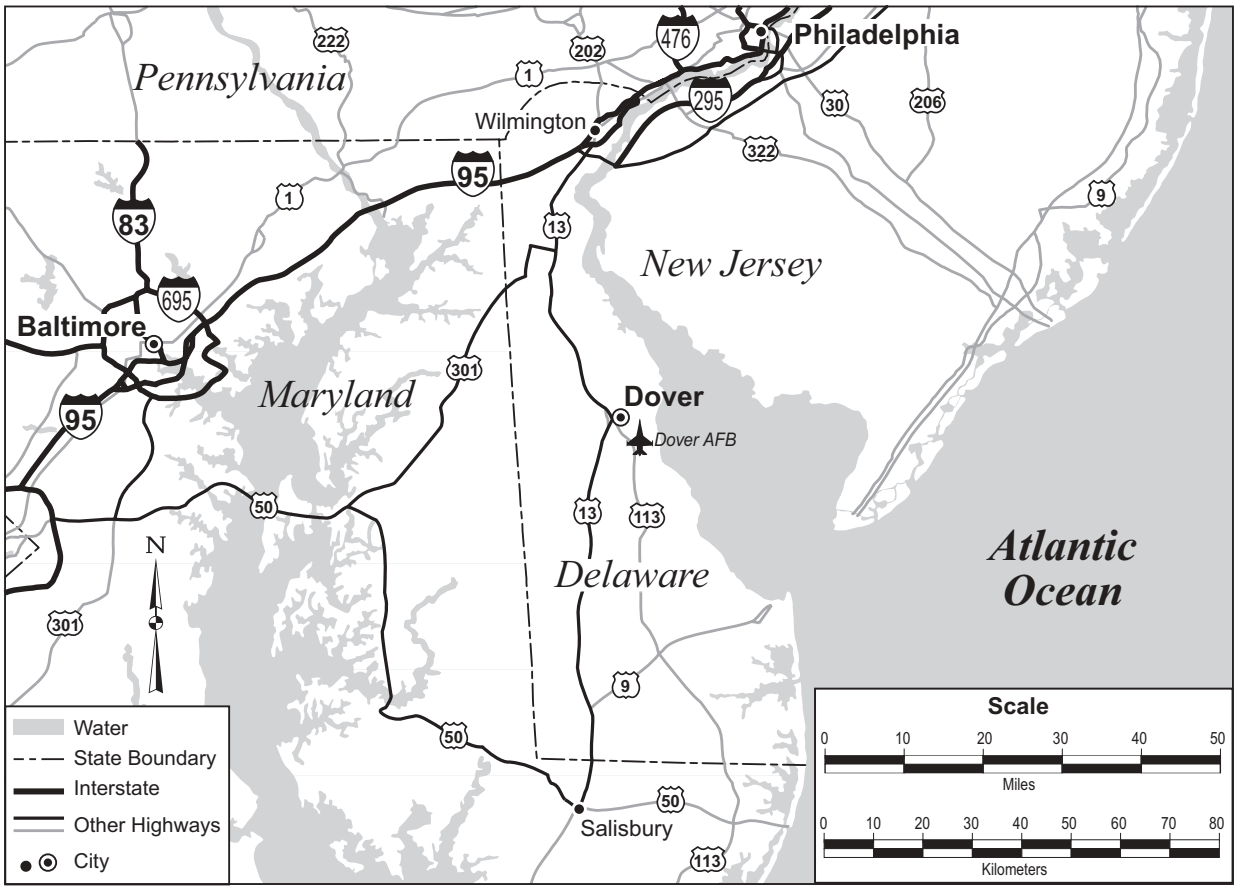

Figure 4B2 Region Around Dover Air Force Base

25 percent of the Nation's inter-theater airlift capability. The 436th provides worldwide movement of outsized cargo and personnel on scheduled, special assignment, exercise, and contingency airlift missions (436th Airlift Wing 2003).

In 1998, the 436th Airlift Wing flew more than 600 missions throughout the world, projecting global reach to more than 90 countries on 6 continents. Additionally, the 436th Airlift Wing operates the largest and busiest aerial port in the U.S. Department of Defense, with its passenger terminal moving over 100,000 passengers in 1998 (436th Airlift Wing 2003).

Population

The population of Kent County is 126,697, or 16.2 percent of the population of Delaware. The population of Dover, the closest city to Dover Air Force Base, is 32,135, while that of Wilmington is 72,664 (DOC 2003). The population within an 80-kilometer (50-mile) radius of the airfield is 1,751,843. There are more than 4,200 military, 1,200 civilians, and 2,500 reservists who work at the base.

Air Quality

The area around Dover Air Force Base is in attainment for the EPA NAAQS criteria air pollutants, except for O_3. Attainment status designations have not been promulgated for PM_{10} or $PM_{2.5}$. Kent County is designated by EPA (40 CFR 81.308) as:

- "Better than national standards" for SO_2,
- "Unclassifiable/attainment" for CO
- "Nonattainment – Severe" for O_3,
- "Cannot be classified or better than national standards" for NO_2, and
- There is no designation for Pb.

5.0 Potential Environmental Impacts

This section describes the environmental impacts from incident-free and accident conditions during transport of HEU over the global commons, transfer of the material from the aircraft or ship to SST/SGTs, and ground transportation from the port of entry to the Y-12 Complex for the following:

- the Proposed Action to transport the material to the Y-12 Complex via the McGhee Tyson Air National Guard Base at the McGhee Tyson Airport, Alcoa, TN;

- Alternative 1, transport of the material to the Y-12 Complex through an alternate aerial port of entry, the Dover Air Force Base, Dover, DE;

- Alternative 2, ship transport of the material to a mid-Atlantic military port, then to the Y-12 Complex; and

- the No Action Alternative.

The activities addressed by this EA potentially impact the global commons and public and occupational health and safety. Accordingly, these two topics are evaluated in the following sections. The range of environmental impacts associated with either the Proposed Action or the Alternatives for both incident-free operations and accident conditions related to transporting the HEU would be small regardless of the transportation package and the amount of HEU (l66 kilograms [366 pounds] or 332 kilograms [732 pounds]). Nonradiological impacts of HEU transport on the global commons would be minor for both normal and accident conditions. Radiological impacts associated with transport through the global commons are described as follows:

- A member of the air transport crew would have an increased risk of a latent cancer fatality (LCF) of 1.6×10^{-7} to 3.9×10^{-7} (1 chance in 3 million to 6 million).

- A member of the ship's crew would have an increased risk of an LCF of 6.0×10^{-7} to 1.2×10^{-6} (1 chance in 800 thousand to 1.7 million).

- At the airfield, a noninvolved worker and the maximally exposed individual (MEI) member of the public would have an increased risk of an LCF of 2.9×10^{-14} and 1.3×10^{-14}, respectively, or essentially zero, from an aircraft landing-stall-fire accident.

- At the seaport, a noninvolved worker and the MEI would have an increased risk of 1.0×10^{-13} and 7.4×10^{-14}, respectively, or essentially zero, from an accident.

- The population within 80 kilometers (50 miles) of the airfield would likely experience no increase in LCFs from exposure to radiation from an aircraft landing-stall-fire accident based on the calculated radiological risk (1.8×10^{-10} to 2.6×10^{-10}) being much less than 1.

- The population within 80 kilometers (50 miles) of the seaport would likely experience no increase in LCFs from exposure to radiation from a shipping accident based on the calculated radiological risk (1.2×10^{-10}) being much less than 1.

The ground transport portion of the action would include the transfer of packages from the aircraft or ship to the SST/SGT and SST/SGT travel to the Y-12 Complex. The following impacts are estimated for ground transportation from either an airfield or marine port:

- At the airfield, a worker transferring packages from the aircraft to the SST/SGTs, or a noninvolved worker monitoring the transfer, would have an increased risk of an LCF of 4.5×10^{-7} to 6.0×10^{-6} (1 chance in 170 thousand to 2 million).

- At the seaport, the increased risk of an LCF to a worker or a nearby noninvolved worker would range from 2.4×10^{-7} to 4.8×10^{-6} (1 chance in 200 thousand to 4 million).

- A member of the SST/SGT crew would have an increased risk of an LCF ranging from 3.6×10^{-8} to 7.2×10^{-6} (1 chance in 140 thousand to 28 million) from incident-free operations.

- The MEI would have an increased risk of an LCF of 2.3×10^{-11} to 7.2×10^{-11} (less than 1 chance in 13 billion) from incident-free operations.

- The general population would likely have no excess LCFs from incident-free operations based on the calculated radiological risk range of 2.8×10^{-8} to 5.0×10^{-6} .

- The MEI would have an increased risk of an excess LCF of 2.6×10^{-14} to 2.2×10^{-13} (less than 1 chance in a trillion) associated with an SST/SGT accident.

- The general population would have an increased nonradiological risk of a fatality of 2.7×10^{-7} to 6.0×10^{-5} (1 chance in 17 thousand to 4 million) from an SST/SGT accident. Calculated radiological risk is much less than 1, ranging from 4.1×10^{-13} to 1.2×10^{-11}, indicating that there would likely be no LCFs from an SST/SGT accident.

There are no transportation impacts associated with the No Action Alternative; however, it does not respond to DOE's purpose and need for action.

5.1 Impacts of Proposed Action

The Proposed Action is to transport HEU in a C-17 aircraft over the global commons between Russia or Europe and the United States and land at the McGhee Tyson Air National Guard Base. At the McGhee Tyson Air National Guard Base, the packages of HEU would be transferred from the aircraft to SST/SGTs. The SST/SGTs would then transport the material to the Y-12 Complex.

5.1.1 Air Transportation

Air transportation of the HEU from a location in Russia or Europe to the United States would likely occur in a C-17, a military cargo aircraft. For purposes of evaluating impacts and comparing alternatives, representative transport distances are used. The distance used for the Proposed Action is based on a starting point of St. Petersburg, Russia and a terminating point at McGhee Tyson Air National Guard Base (see Table 3–1).

The Proposed Action was evaluated based on the use of a United States military C-17 for transporting the HEU from Russia or Europe to the McGhee Tyson Air National Guard Base. As noted earlier, there are other military cargo aircraft that could also be used to perform the transport function. Both the C-141 and the C-5 are capable of transporting the required number of packages (TN-BGC1, ES-2100, or 5X22). The distance from the flight crew to the expected position of the cargo is approximately the same and, with similar cruising speeds, the travel time and time of exposure would also be similar. The impacts from the accident analysis are a function of the total quantity of material transported (bounded by using a payload of 332 kilograms [732 pounds] of HEU), so they would not differ for other aircraft. Therefore, the environmental impacts calculated for the C-17 would be comparable for the C-141 and C-5.

5.1.1.1 Global Commons

The Proposed Action would involve air transport of HEU over the ocean, so this EA examines the potential impacts on the global commons in accordance with Executive Order 12114. Potential impacts of the Proposed Action to the global commons could be due to normal operations or accident conditions.

Normal operations are not expected to have a significant impact to the air of the global commons. Air emissions from the flight of a single C-17 from the Russian Federation to the United States on the average of once each year (as well as the flights of refueling aircraft) would represent a very small percentage of the thousands of flights crossing the North Atlantic annually. The consequent emissions from such flights would be a similar small percentage and would have no appreciable impact on air quality of the global commons. There are no other potential impacts to the global commons from normal operations.

Impacts of an accident over the global commons would be similar to those discussed in the *Environmental Assessment for the Proposed Interim Storage at the Y-12 Plant Oak Ridge, Tennessee of Highly Enriched Uranium Acquired from Kazakhstan by the United States*, DOE/EA-1006 (DOE 1994a). In DOE/EA-1006, a C-5 aircraft was used to transport 566 kilograms (1,248 pounds) of HEU. It was concluded that in the case of an accident there could be some loss of life to marine organisms directly exposed to the enriched uranium. However, as a result of the large volumes of water, the mixing mechanisms within it, the existing background uranium concentrations, and the radiation-resistance of aquatic organisms, the radiological impact of an accident would be localized and of minor impact.

The C-17 aircraft to be used for the Proposed Action has an excellent safety record. Over the 12-year period from1991 through 2002, it had an accident rate of 1.22 mishaps per 100,000 hours (USAF 2003). The flight time associated with the Proposed Action would be up to 12 hours, 15 minutes, with about 11 hours of the flight time occurring over the global commons. The amount of material to be shipped for the Proposed Action would be 166 or 332 kilograms (366 or 732 pounds), depending on the package used and the availability of funding, so the impacts would be expected to be less than those calculated in DOE/EA-1006 from analyzing the transport of 566 kilograms (1,248 pounds) of HEU.

The response to and impacts of an in-flight accident over the global commons would be different, depending on the location and the condition of the packages following the accident. It is assumed that packages that

did not sink below 200 meters (670 feet) would be considered recoverable and would be retrieved. Undamaged packages that sank deeper than 200 meters (670 feet) would be breached by the pressure of the overlying water or corrosion and release their contents gradually. The contents of damaged packages would be immediately released into the ocean. As discussed in DOE/EA-1006, the volume of water coupled with the turbulence and mixing of the water would dilute the material that is either leaked out gradually or released immediately. Only very localized and minor impacts on the global commons are postulated for an air transport accident.

5.1.1.2 Impacts from Incident-Free Air Transportation

The incident-free transport of HEU in a military aircraft would result in radiological exposure only to the personnel on the aircraft. Because of the distance to the nearest members of the public, there would be no radiological exposure to the public. The radiological dose to the persons on the cargo plane (crew) would be proportional to the package surface dose rate, the crew-view package characteristic dimensions (i.e., the surface of the package array that faces the crew), crew-to-package distance and the time between boarding the aircraft and exiting at McGhee Tyson Air National Guard Base (see Table 3–2).

The dose rate is assumed to be 1 millirem per hour, 1 meter (39.4 inches) away from the package. The actual dose rate for HEU packages is expected to be less than 1 millirem per hour, consistent with DOE's experience in using Type B packages to transport HEU. The crew-view package characteristic dimension is a function of the package configuration, which in turn, is dependent on the size and number of packages and space limitations in the cargo plane.

The HEU could be transported in any of three transportation packages. Analyzing the impacts from using the TN-BGC1 and the ES-2100 provides representative results that would also be valid if the 5X22 package were used. If the TN-BGC1 transportation package were used to transport 166 kilograms (366 pounds) of HEU, the shipment would comprise 24 packages. The expected aircraft loading configuration would be 3 packages wide by 8 rows long. If a double shipment (332 kilograms [732 pounds]) were transported in a single aircraft using the TN-BGC1 package, the expected configuration would be 4 packages wide by 12 long. In this configuration, the crew-to-package distance would be shorter than for the previous configuration. If ES-2100 transportation packages were used, their greater capacity would allow a shipment to comprise 332 kilograms (732 pounds) of HEU contained in 24 packages. The ES-2100 and 5X22 packages use 208-liter (55-gallon) drums as the outer confinement layer and would be amenable to packing in a cargo restraint transporter that holds 1 or 2 layers of 4 drums each (see **Figure 5–1**). Using the cargo restraint transporter with 2 layers of drums to transport 24 packages would result in an aircraft loading configuration that is 2 packages wide by 2 packages tall by 6 packages long. The analysis of impacts is based on 166 kilograms (366 pounds) or 332 kilograms (732 pounds) per shipment when the TN-BGC1 is used and 332 kilograms (732 pounds) per shipment when cargo restraint transporters with 2 layers of packages, represented by the ES-2100, are used. Estimated dose to a member of the crew for transporting either of the packages is given in **Table 5–1**. The slightly higher dose from transporting the TN-BGC1 package is due to the packaging configuration, which results in a larger crew-view package characteristic dimension (higher dose flux) and a shorter crew-to-package distance.

5.1.1.3 Impacts from an Air Transportation Accident

The radiological impacts from radiological releases associated with an accident of the aircraft used to transport HEU from Russia to the United States were calculated using the MELCOR Accident Consequence Code System, Version 1.12 (MACCS2).

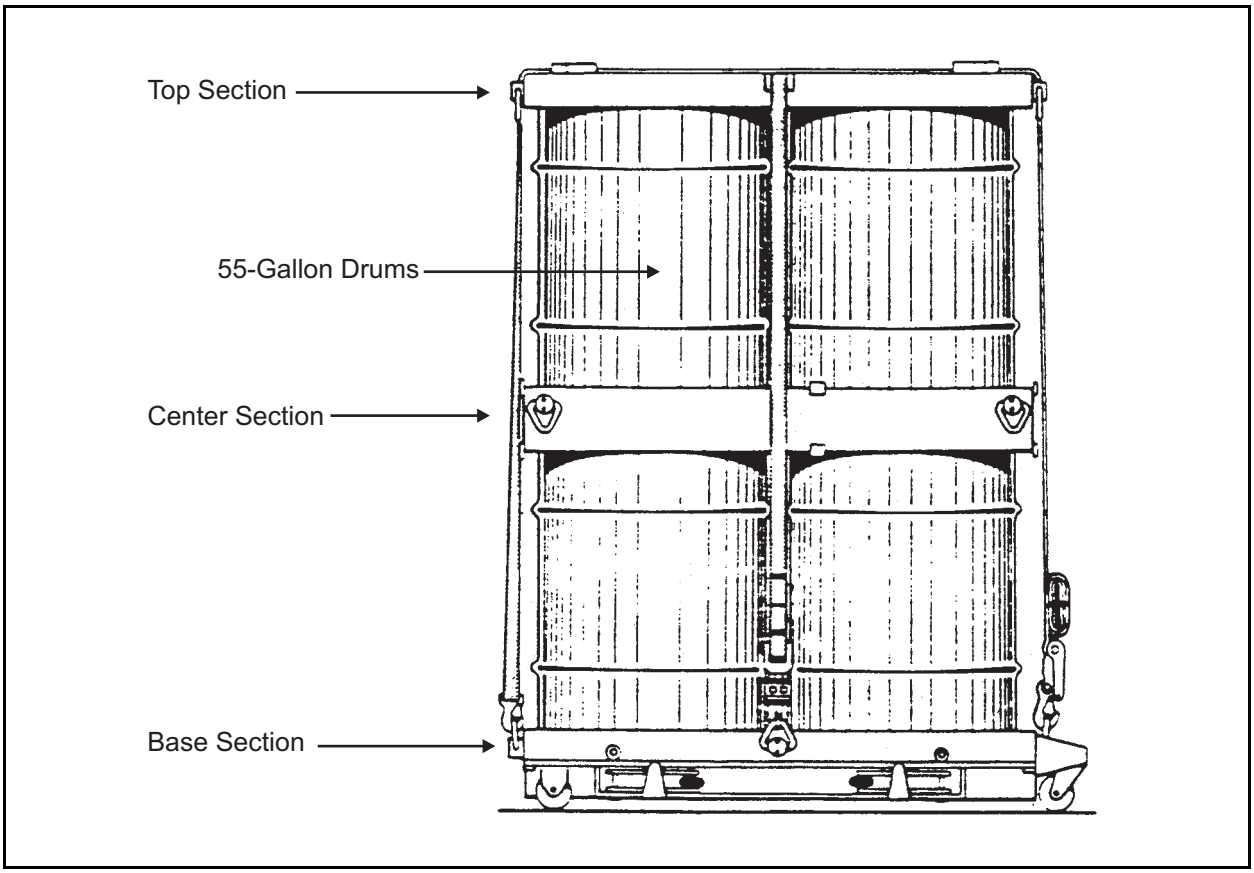

Figure 5B1 Configuration of 2 Layers of 55-Gallon Size Packages in a Cargo Restraint Transporter

Table 5–1 Human Health Impacts from Incident-Free Air Transport

Receptor	*Transport Package and Number*	*HEU Payload (kilograms)*	*Transport to McGhee Tyson Air National Guard Base*	
			Dose (person-rem)	*LCFs* [a]
Member of Transportation Crew	TN-BGC1 24 packages 48 packages	 166 332	 3.87×10^{-4} 6.4×10^{-4}	 2.3×10^{-7} 3.8×10^{-7}
	ES-2100 24 packages	332	3.1×10^{-4}	1.9×10^{-7}

[a] LCFs are based on the risk factor of 0.0006 per person-rem.

As implemented, the MACCS2 model evaluates doses due to inhalation of airborne material, as well as direct exposure to the passing plume. This represents the major portion of the dose that an individual would receive as a result of an aircraft accident. The longer-term effects of radioactive material deposited on the ground after a postulated accident, including the resuspension and subsequent inhalation of radioactive material and the ingestion of contaminated crops, were not modeled for this EA. These pathways have been studied and found to contribute less significantly to the dose than the inhalation of radioactive material in the passing plume; they are also controllable through interdiction. Instead, the deposition velocity of the radioactive material was set to 0, so that material that might otherwise be deposited on surfaces remained airborne and available for inhalation. This adds a conservatism to inhalation doses that can become considerable at large

distances. Thus, the method used in this EA is conservative compared with dose results that would be obtained if deposition and resuspension were taken into account.

The impacts were assessed for the offsite population surrounding McGhee Tyson Air National Guard Base, the MEI, and a noninvolved worker. The offsite population is defined as the general public residing within 80 kilometers (50 miles) of the McGhee Tyson Air National Guard Base. The population distribution is based on the 2000 Census (DOC 2001, DOC 2002). These data were fitted to a polar coordinate grid with 16 angular sectors aligned with the 16 compass directions and radial intervals that extend outward to 80 kilometers (50 miles). The offsite population within 80 kilometers (50 miles) was estimated to be 1,081,825 persons near McGhee Tyson Air National Guard Base. For this analysis, no credit was taken for emergency response evacuations or temporary relocation of the general public. The MEI is defined as a hypothetical individual member of the public who would receive the maximum dose from an accident. This individual is assumed to be located 1.6 kilometers (1 mile) from the accident site.

A severe aircraft accident was analyzed for air transport of 332 kilograms (732 pounds) of HEU over U.S. airspace. This accident scenario involves the stall and crash of the aircraft while attempting to land. The crash at the airfield results in a fire from the remaining fuel in the aircraft. This accident scenario assumes that the impact and fire cause failure of all the transport packages, exposing all the HEU to the fire. Based on extensive experimental data, the *DOE Handbook of Airborne Release Fractions* (DOE 1994b) predicts a release fraction of 0.0000053 to 0.01 for heating fine powder. A very conservative estimate of the amount of material released to the environment was made by assuming that the HEU was a fine powder and using the maximum value from the range of release fractions. This accident could occur regardless of the type of aircraft used to transport the HEU. MACCS2 input parameters were all set to maximize the calculated dose and produce a conservative and bounding radiological consequence to the public. Plume heat energy, plume height, plume time duration, and the fraction of available uranium released to the environment as respirable particles were the key input parameters that were set to result in higher calculated doses.

A maximum consequence landing-stall-fire accident has a 2.0×10^{-8} chance of occurring (DOE 1994b). The total population dose to the 1,081,825 persons within an 80-kilometer (50-mile) radius of McGhee Tyson Air National Guard Base is 21.5 person-rem from a landing-stall-fire accident of one C-17 carrying 332 kilograms (732 pounds) of HEU. The conditional LCF probability is 0.013, equivalent to about 1 chance in 80, that any excess cancer fatalities would occur in the surrounding 80-kilometer- (50-mile)-radius population. The risk of such a cancer fatality is much lower when the 2.0×10^{-8} probability of occurrence of this accident is considered (see **Table 5–2**).

The dose to the MEI located 1.6 kilometers (1 mile) from the plume release site is 1.05 millirem. The MEI dose would result in 6.3×10^{-7} LCFs, which is about one chance in 1.6 million that an excess cancer would occur in a person located 1.6 kilometers (1 mile) from the HEU plume release location.

The maximum dose to a noninvolved worker, a worker at the airfield who is not part of the HEU transportation activity, is calculated to occur 100 meters (328 feet) from the site of the landing-stall-fire accident. This worker would receive a dose of 2.42 millirem. The dose would result in 1.5×10^{-6} LCFs, or about 1 chance in 700 thousand of causing an excess cancer fatality in the noninvolved worker.

Results of the MACCS2 calculations for the landing-stall-fire accident are presented in Table 5–2 for an aircraft transporting 332 kilograms (732 pounds) of HEU. The results would be one-half of the reported results for an aircraft transporting 166 kilograms (366 pounds) of material. The results are independent of the transportation package design or the aircraft design.

Table 5–2 Human Health Impacts of a Severe Landing-Stall-Fire Accident from Air Transport of 332 Kilograms of HEU

	Proposed Action – Land at McGhee Tyson Air National Guard Base
Accident Probability (per landing)	2.0×10^{-8}
Collective Population Dose [a] (person-rem)	21.5
Population LCFs [b]	0.013
Population Radiological Risk [c]	2.6×10^{-10}
MEI Dose [a] (millirem)	1.05
MEI LCFs	6.3×10^{-7}
MEI Radiological Risk [c]	1.3×10^{-14}
Noninvolved Worker Dose (millirem) [d]	2.42
Noninvolved Worker LCFs [b]	1.5×10^{-6}
Noninvolved Worker Radiological Risk [c]	2.9×10^{-14}

[a] Doses are 50-year total effective dose equivalent.
[b] LCFs are based on the risk factor of 0.0006 per person-rem.
[c] Radiological risk includes consideration of the accident probability.
[d] Noninvolved worker is located 100 meters (328 feet) from the plume release site.

The potential impacts of an in-flight accident while over U.S. territory were previously evaluated in DOE/EA-1006. The analysis evaluated the impact of an in-flight accident involving 566 kilograms (1,248 pounds) of HEU on a generic, urban area with a large population of 5.21 million. The in-flight accident analysis projected a population dose of 15.6 person-rem with a corresponding LCF risk of 0.0094. The material at risk for the landing-stall-fire accident analyzed in this EA is 332 kilograms (732 pounds) of HEU. The total dose to the exposed population of approximately 1.1 million people is estimated to be 21.5 person-rem which corresponds to an LCF risk of 0.013. Therefore, the landing-stall-fire accident analyzed in this EA envelopes the potential population impacts that would be associated with an airplane accident.

Criticality Safety

All three of the packages are Type B packages approved for HEU transport in accordance with the appropriate U.S. regulations. Prior to being used for this project, they would be certified as meeting the International Atomic Energy Agency regulations. These regulations include specific requirements and design criteria for nuclear criticality safety. The regulatory requirements subject packages to drop, puncture, fire, and water immersion conditions to demonstrate structural integrity and radioactive material containment assurance.

By regulation, packages such as the TN-BGC1, 5X22, and the ES-2100 must maintain their fissile material (in this case HEU) contents in a safe, subcritical condition even if: (1) the fissile material within the package is physically reformed into the most criticality-favorable geometric shape, (2) the package fills with optimum density water, (3) the package is surrounded by a water neutron reflector, and (4) multiple fissile material packages are in the most criticality-favorable geometric configuration with respect to each other. Analysis of such a bounding scenario is required to demonstrate subcriticality with a sufficient deterministic and probabilistic margin of safety. Therefore, any accident which could result in the damage of the HEU packages and their submersion in water would not cause a nuclear criticality.

5.1.2 Ground Transportation

The packages would be transported from the aerial port of entry to the Y-12 Complex by SST/SGTs, in accordance with the requirements of DOE Orders and U.S. Department of Transportation regulations. The SST/SGT vehicles are specially designed semi-trailers pulled by an armored tractor, and use penetration resistance and delay mechanisms to prevent unauthorized access to cargo or its removal. The SST/SGT transport design provides protection of the cargo from damage or release in the event of a severe accident.

Incident-free and accident impacts from HEU transport from the McGhee Tyson Air National Guard Base to the Y-12 Complex were estimated using the RADTRAN 5 computer code (SNL 2000). This code calculates the doses and corresponding risks of transportation to expected receptors, that is, the crew (truck drivers) and the public. The incident-free radiological exposures to the receptors were calculated based on the package (or conservatively, the SST/SGT) external dose rate (a dose rate at 1 meter [39.4 inches] in terms of millirem per hour from the conveyance, known as the Transportation Index or TI), distance traveled along the designated transportation route, and the population density along the route (public residing within 800 meters [0.5 miles] of the route). The TI for the HEU packages is expected to be less than 1. This is consistent with the DOE experience in using Type B packages to transport HEU.

The impacts of hypothetical transportation accidents to the public were calculated based on the accident severity and its potential for leading to radiological releases. The release is a function of the material at risk (the amount of the material transported within an SST/SGT) and the fraction of material released from the SST/SGT. The accident severity category classifications and the corresponding fractional releases of the materials were based on the methodology described in NUREG-0170 (NRC 1977) and summarized in the *DOE Resource Handbook on Transportation Risk Assessment* (DOE 2002b). The likelihood of a transportation accident was based on the SST/SGT transport accident rates used in various DOE EISs such as DOE/EIS-0306 and DOE/EIS-0319 (DOE 2002a, DOE 2000).

A representative truck route was selected for the shipments from McGhee Tyson Air National Guard Base to the Y-12 Complex, consistent with current routing practices and all applicable routing regulations and guidelines. The route was determined for traffic and radiological risk assessment purposes and may not be the actual route that would be used to transport radioactive material in the future. For security reasons, specific routes cannot be identified in advance.

Route characteristics that are important to the radiological risk assessment include the total shipment distance and population distribution along the route. The specific route selected determines both the total potentially exposed population and the expected frequency of transportation-related accidents. Route characteristics are summarized in **Table 5–3**. The population densities along each route are derived from 2000 U.S. Bureau of Census data (ORNL 2000). Rural, suburban, and urban areas are characterized according to the following breakdown:

- rural population densities range from 0 to 54 persons per square kilometer (0 to 139 persons per square mile);
- suburban population densities range from 55 to 1,284 persons per square kilometer (140 to 3,326 persons per square mile); and
- urban population density includes all population densities greater than 1,284 persons per square kilometer (3,326 persons per square mile).

The affected population, for route characterization and incident-free dose calculation, includes all persons living within 800 meters (0.5 mile) of each side of the road.

Table 5–3 Truck Route Characteristics for Ground Transport

From	*To*	*Nominal Distance (kilometers)*	*Percentage in Zones*			*Population Density in Zone (per square kilometer)*		
			Rural	*Suburban*	*Urban*	*Rural*	*Suburban*	*Urban*
McGheeTyson Air National Guard Base	Y-12 Complex	40	37.4	60.9	1.7	22.3	317.6	1,764.7
Dover Air Force Base		1100	46.7	48.6	4.6	21.1	325.8	2,304.7
Mid-Atlantic Military Port		870	52.0	45.2	2.8	19.9	297.4	2,137.0

5.1.2.1 Impacts from Transfer at Airfield

At the McGhee Tyson Air National Guard Base, the required number of SST/SGTs would be parked at a secure location awaiting the arrival of the aircraft. Upon arrival, the packages of HEU would be unloaded from the aircraft by air base personnel and loaded onto SST/SGTs by NNSA personnel. The individuals who unload and load packages would receive some radiological exposure. Since these activities would be performed in a secure area at a distance from the public, the dose to the public under incident-free conditions would be negligible.

The estimated incident-free handling dose to a representative worker is based on the assumption that unloading or loading activities would take about 2 hours. The dose to a representative worker, conservatively assuming the unloading and loading are being done by the same people, is estimated to be 10 millirem. Assuming that noninvolved workers and guards are approximately 10 meters (33 feet) away from any packages, the dose to a representative individual is estimated to be 0.75 millirem. Using the dose-to-risk conversion factor of 0.0006 LCF per person-rem, the risks to a worker handling packages and any nearby worker (e.g., guards or other personnel) would be 6.0×10^{-6} and 4.5×10^{-7} LCF, respectively.

In the process of transferring packages from the aircraft to the SST/SGT, there is a possibility of an environmental release of a small amount of uranium oxide powder if a handling accident breached a package (e.g., a puncture from a misguided forklift tine). The material release would lead to local contamination with very low potential hazards to the workers involved. The transfer of packages would be done in an open air or semi-open air environment so any release would be dispersed by ambient air currents leading to a very small and localized concentration of uranium in the air that workers might inhale. The air concentration of HEU that a worker would be exposed to would be a function of many variables such as wind speed, wind direction, worker location, degree of damage to the package, and response to the damage. Because the air concentration is dependent on so many variables, a qualitative dose assessment was performed. NNSA personnel familiar with the contents of the containers would provide oversight of the transfer, so that if there were a mishandling incident, actions to contain the material and mitigate any release would lead to very small consequences to the environment or workers. The consequences to noninvolved workers 100 meters (330 feet) from the incident and beyond would be orders of magnitude smaller than those of the involved workers. The public doses from potential incidents during handling activities also would be extremely small and would be bounded by the evaluated aircraft landing-stall-fire accident that would release much more material.

5.1.2.2 Impacts from Incident-Free Ground Transportation

Per-shipment risk factors were calculated using RADTRAN 5 for the collective populations of exposed persons and for a representative member of the crew for a representative route and anticipated shipment configurations. Exposed persons include people living along the route, pedestrians and drivers along the route, and the public at rest and fueling stops. The exposed population for transport from McGhee Tyson Air National Guard Base to the Y-12 Complex is estimated to be 19,400. The 2 scenarios analyzed were the use of 4 SST/SGTs to transport 166 kilograms (366 pounds) in 24 TN-BGC1 packages and use of 1 SST/SGT to transport 332 kilograms (732 pounds) in 24 ES-2100 packages. The human health risks associated with transport of HEU are summarized in **Table 5–4**.

Table 5–4 Human Health Impacts from Incident-Free Ground Transportation

Receptor	*Transport Package (number of SST/SGTs)*	*Material at Risk (HEU kilograms)*	*Proposed Action – Transport from McGhee Tyson Air National Guard Base*	
			Dose (person-rem)	*LCFs* [a]
Member of Transportation Crew [b]	TN-BGC1 [c] (4 SST/SGTs)	166	2.1×10^{-4}	1.3×10^{-7}
Collective Public [d]			1.5×10^{-4}	9.0×10^{-8}
MEI [e]/4 SST/SGTs			1.2×10^{-7}	7.2×10^{-11}
Member of Transportation Crew [b]	ES-2100 (1 SST/SGT)	332	5.9×10^{-5}	3.5×10^{-8}
Collective Public [d]			4.6×10^{-5}	2.8×10^{-8}
MEI [e]/SST/SGT			3.7×10^{-8}	2.2×10^{-11}

[a] LCFs are based on the risk factor of 0.0006 per person-rem.
[b] Maximum dose to a member of transportation crew assumes all shipments are made by one crew.
[c] If 332 kilograms (732 pounds) of HEU were transported in TN-BGC1 packages, the number of SST/SGTs would increase to 8 and the corresponding dose and risk values would double.
[d] Exposed population along the route [residing within 800 meters (0.5 mile) of road and those in transit on the roads].
[e] A member of the public 30 meters (98 feet) from the highway along the route; assumes the individual is exposed to a convoy of 4 SST/SGTs for transport of TN-BGC1 packages and a single SST/SGT for ES-2100 packages.

5.1.2.3 Impacts from Ground Transportation Accidents

As stated earlier, the impacts of potential accidents during transport were also analyzed using RADTRAN 5. Accident risks were calculated based on SST/SGT accident rates along with the probability of accident severity in conjunction with population density along the transportation route. Per-shipment risk factors were calculated for nonradiological and radiological accidents in terms of population fatalities. Important parameters for the transportation accident analysis, in addition to vehicle accident rate, are container or shipping cask accident response characteristics and release fractions. Only in the most severe accident category, NUREG-0170 (NRC 1977), Severity Category VIII, would there be any release of material transported in an SST/SGT. Category VIII represents a large crash force, high-impact velocities, long fire duration, and a high puncture impact speed (a 90-kilometer [55-mile] per hour or higher collision into the side of the vehicle and a 982-degree Celsius [1,800-degree Fahrenheit] fire lasting 1.5 hours). The bounding accident is the highest category accident used in the analysis and is associated with the probability of occurrence for each population density.

Table 5–5 summarizes the potential human health risks due to HEU transport accidents summed over all segments of the shipment route. For conservatism, it was assumed that the SST/SGT transporter would be traveling at 90 kilometers (55 miles) per hour in all segments (rural, suburban, and urban routes).

Table 5–5 Population Health Impacts from Potential Ground Transport Accidents

Impact	*Transport Package (number of SST/SGTs)*	*Material at Risk (HEU kilograms)*	*Transport from McGhee Tyson Air National Guard Base*	
			Risk (dose in person-rem) [a,b]	*Risk (fatalities)* [b,c]
Nonradiological (traffic fatalities)	TN-BGC1[d] (4 SST/SGTs)	166	NA	1.1×10^{-6}
Radiological (population)			3.4×10^{-10}	2.0×10^{-13}
Nonradiological (traffic fatalities)	ES-2100 (1 SST/SGT)	332	NA	2.7×10^{-7}
Radiological (population)			6.8×10^{-10}	4.1×10^{-13}

[a] Doses are 50-year total effective dose equivalent.
[b] Risk values include the probability of an accident occurring.
[c] For radiological impacts, risk is from LCFs. LCFs are based on the risk factor of 0.0006 per person-rem.
[d] If 332 kilograms (732 pounds) of HEU were transported in TN-BGC1 packages, the number of SST/SGTs would increase to 8 and the corresponding dose and risk values would double.

Maximally Exposed Individual Risk

The accident risk assessment takes into account the entire spectrum of potential accidents, from the fender-bender to the extremely severe. In order to provide additional insight into severity of accidents in terms of the potential dose to a MEI, an accident consequence assessment was performed for a hypothetical accident scenario. This accident would fall into Severity Category VIII of the NUREG-0170 accident matrix (NRC 1977), which is the only category with a release of radioactive material. This analysis was performed irrespective of its potential likelihood (that is, a probability of 1). The MEI was assumed to be 33 meters (108 feet) directly downwind of the accident, and would receive a dose of 0.75 or 6.0 rem from transportation involving the TN-BGC1 or the ES-2100 package, respectively (see **Table 5–6**). The likelihood of such an accident is a function of the highway characteristic accident frequency (i.e., urban, suburban, rural), the corresponding probability of a Severity Category VIII accident, and the distance traveled. Based on those factors, the likelihood of such an accident for transportation from McGhee Tyson Air National Guard Base to the Y-12 Complex ranges from 1 in 17 billion to 1 in 31 trillion. Using the high end of the range of likelihood, the radiological risk to an MEI is estimated to be 1.8×10^{-13} LCFs (less than 1 chance in a trillion, or essentially zero).

SST/SGT Threat Assessment

The safeguards and security systems for SST/SGT transportation are designed to protect against sabotage and other adversarial actions. The approved DOE design-basis threat addresses acts of terrorism. The potential impacts associated with the threat of an attack on an SST/SGT shipment have been analyzed in other EAs (DOE 1994a, DOE 1995).

The most immediate and severe threat to workers or members of the public from a sabotage or terrorist attack on an SST/SGT would be death or injury from weapons fire. The transportation workers who are trained and responsible for protecting the shipments would likely suffer fatalities during an attack. Casualties or fatalities to members of the public would be dependent on their proximity to the transporter if it were to come under attack. Evaluation of a bounding scenario assuming that the attack occurred in an urban setting, the

SST/SGT was carrying the maximum allowable HEU mass, and stable atmospheric conditions resulted in a maximum individual dose of 30 millirem and a population dose of about 4,000 person-rem.

Table 5–6 MEI Health Impacts from Potential Ground Transport Accidents

Impact	*Transport Package*	*Material at Risk [a] (HEU kilograms)*	*Transport from McGhee Tyson Air National Guard Base*	
			Dose [b] (rem)	*LCFs [c]*
MEI [d] Accident Consequence	TN-BGC1	42	0.75	4.5×10^{-4}
	ES-2100	332	6.0	3.6×10^{-3}
MEI [d] Radiological Risk [e]	TN-BGC1	42	4.4×10^{-11}	2.6×10^{-14}
	ES-2100	332	3.5×10^{-10}	2.1×10^{-13}

[a] The material at risk is based on the payload of 1 SST/SGT; 6 TN-BGC1s per SST/SGT or 22 ES-2100s per SST/SGT.
[b] Doses are 50-year total effective dose equivalent.
[c] LCFs are based on the risk factor of 0.0006 per person-rem.
[d] An individual located 33 meters (108 feet) downwind from the accident.
[e] Radiological risk to the maximally exposed individual is based on an accident probability of 5.9×10^{-11}.

The radiological impacts of an attack during the Proposed Action would likely be less than those used above. The amount of HEU in a single SST/SGT would be a small fraction of the mass assumed in the above analysis. Therefore, the expected risk of a terrorist attack under the Proposed Action would be a fraction of the evaluated risks presented above.

5.1.3 Environmental Justice

As shown in Table 5–4, incident-free transportation of HEU along the representative ground transportation route would not have significant radiological impacts on the population residing along the route. The risk of an LCF occurring among the population, including low-income and minority portions of the population, would be no more than 9.0×10^{-8}, or about 1 in 11 million. The corresponding risk to the MEI among the exposed population is no more than 7.2×10^{-11}, or essentially zero for all practical purposes.

Accidents that could occur during ground transportation of HEU pose even smaller radiological risks to populations residing along representative transportation routes. Table 5–5 shows the radiological consequences and risks that would result from accidents severe enough to breach the transportation package. An accident severe enough to breach the package is unlikely and the radiological accident risks to the populations surrounding the accident site would be no more than 4.1×10^{-13}, or essentially zero. The radiological accident risk to the MEI among the public residing along representative transportation routes is no more than 2.1×10^{-13} (see Table 5–6). In the unlikely event of an aircraft landing-stall-fire accident, the radiological risk to the population would be 2.6×10^{-10}, or essentially zero. As shown in Table 5–2, the radiological risk to the MEI from the landing-stall-fire accident would be 1.3×10^{-14}, even smaller than that associated with a ground transportation accident.

Radiological risks attendant to accidents during ground transportation of HEU are relatively small compared to the maximum risk of 1.1×10^{-6} (approximately 1 chance in 900,000) for a nonradiological highway traffic accident fatality.

In summary, incident-free transportation of HEU, as well as potentially severe radiological accidents that could occur during transportation, do not pose significant risks to populations residing near McGhee Tyson Air National Guard Base or along representative transportation routes. Thus, no disproportionately high and

adverse radiological risks to low-income populations and minority populations would be expected to result from implementation of the Proposed Action. Nonradiological highway fatalities are also few and could occur anywhere along the representative routes.

5.1.4 Cumulative Impacts

The *Y-12 Site-Wide EIS* (DOE 2001) reported the estimated cumulative impacts associated with the ongoing operations of the Y-12 Complex, the Oak Ridge Reservation, and the Watts Bar Nuclear Power Plant (including tritium production). Impacts of the Proposed Action were compared to the cumulative impacts presented in the *Y-12 Site-Wide EIS*, since this action could add to the impacts on the public living near the Y-12 Complex. The contributions of the Proposed Action to the overall cumulative impacts of ongoing operations are shown in **Table 5–7**. For purposes of this comparison, the largest calculated results, regardless of whether they are related to use of the TN-BGC1 or the ES-2100, were used.

Table 5–7 Estimated Annual Cumulative Radiological Impacts

	MEI Dose (millirem/yr)	***Population Dose (person-rem/yr)***	***Population LCFs***	***Collective Worker Dose (person-rem/yr)***	***Worker LCFs***
Oak Ridge Reservation [a] Total	8.0	90	0.054	125[b]	0.075
Surplus HEU Disposition [c]	0.039	0.16	9.6×10^{-5}	11.3	0.0068
Watts Bar Nuclear Plant [d]	0.34	1.8	0.0011	110	0.066
Spallation Neutron Source [e]	1.5	1.3	0.0008	370	0.22
Transuranic Waste Treatment Facility [f]	0.023	0.12	7.2×10^{-5}	6.2	0.0037
Transport of HEU from Russia	1.2×10^{-4}	1.5×10^{-4}	9.0×10^{-8}	0.02[g]	1.2×10^{-5}
Cumulative Effect	NA[h]	94	0.056	NA[h]	NA[h]

Source: DOE 2001.

[a] Includes Y-12 Complex, East Tennessee Technology Park, and Oak Ridge National Laboratory.

[b] Includes 106.5 person-rem from 1999 Oak Ridge Reservation operations (40.61 person-rem attributable to Y-12) and accounts for the Y-12 Site No Action – Planning Basis contribution of 59.5 person-rem.

[c] Source DOE/EIS-0240.

[d] Includes contribution from tritium production at Watts Bar Plant (DOE/EIS-0288).

[e] Values are conservatively based on the 4-megawatt power level (DOE/EIS-0247).

[f] Based on low-temperature drying alternative from DOE/EIS-0305.

[g] Collective worker dose assumes two workers receive the dose associated with transfer of packages from the aircraft to the SST/SGT.

[h] Cumulative effect is not relevant to the MEI and workers because different individuals receive the indicated doses.

5.2 Impacts of Alternative 1 – Transport to Dover Air Force Base

Rather than flying to McGhee Tyson Air National Guard Base, the Dover Air Force Base was selected as a potential alternative aerial port of entry. The transport aircraft would fly to Dover Air Force Base, where the SST/SGTs would be waiting. The packages would be unloaded from the aircraft and loaded into the SST/SGTs, which would then transport the HEU to the Y-12 Complex. The sections below highlight impacts that differ between Alternative 1 and the Proposed Action. To provide a common basis for comparison, the impacts were based on transporting 332 kilograms (732 pounds) of HEU.

5.2.1 Alternative 1 Impacts from Air Transport

The flight time to cross the Atlantic Ocean would be essentially the same for Alternative 1 and the Proposed Action. Consequently, there would be no difference in impacts to the global commons. However, the total flight time for Alternative 1 would be shorter than for the Proposed Action (see Table 3–2). As a result, the aircraft crew would have a shorter time of exposure (1 hour, 15 minutes) to the packages of HEU and would receive a slightly smaller dose (see **Table 5–8**). As a result of the shorter time in the air, the probability of an in-air accident is slightly less for Alternative 1, but the risks are essentially equal to those for the Proposed Action. The impacts of the landing-stall-fire accident would be lower for Alternative 1 than the Proposed Action (see Table 5–8) due to the distribution of the population. Although the population of 1,751,843 within 80 kilometers (50 miles) of Dover Air Force Base is larger than the 80-kilometer (50-mile) population at McGhee Tyson Air National Guard Base (1,081,825), the population density closer to the accident site is lower, resulting in a lower population dose. For both alternatives, the MEI is assumed to be 1.6 kilometers (1 mile) away, so the impacts are the same.

Table 5–8 Differences in Transportation Risks Between Alternative 1 and the Proposed Action

		Proposed Action McGhee Tyson Air National Guard Base	***Alternative 1 Dover Air Force Base***
	Package	***Fatalities or LCFs*** [a, b]	***Fatalities or LCFs*** [a, b]
Air Transport			
Incident-Free: Air Crew Member Radiological Risk	TN-BGC1	3.8×10^{-7}	3.4×10^{-7}
	ES-2100	1.9×10^{-7}	1.6×10^{-7}
Accident: Landing-Stall-Fire Accident Collective Population Radiological Risk	TN-BGC1 or ES-2100	2.6×10^{-10}	1.8×10^{-10}
Ground Transport			
Incident-Free: SST/SGT Transport Crew Member Radiological Risk	TN-BGC1	2.6×10^{-7}	7.1×10^{-6}
	ES-2100	3.5×10^{-8}	1.0×10^{-6}
Incident-Free: Collective Public Radiological Risk	TN-BGC1	1.8×10^{-7}	5.1×10^{-6}
	ES-2100	2.8×10^{-8}	7.9×10^{-7}
Accident: Collective Public Nonradiological Fatality Risk	TN-BGC1	2.2×10^{-6}	6.0×10^{-5}
	ES-2100	2.7×10^{-7}	7.4×10^{-6}
Accident: Collective Public Radiological Risk	TN-BGC1	4.1×10^{-13}	1.2×10^{-11}
	ES-2100	4.1×10^{-13}	1.2×10^{-11}

[a] LCF risk accounts for the probability of the event occurring. For incident-free operations, the probability is 1. For accidents, the probability of occurrence is substantially less than 1.

[b] The risk values presented are all based on transporting 332 kilograms (732 pounds) of HEU.

5.2.2 Alternative 1 Impacts from Ground Transportation

Differences in the impacts of Alternative 1 and the Proposed Action for ground transportation are related to the differences in population distribution along the route and the time of travel. The representative travel distance for Alternative 1 is 1,100 kilometers (680 miles) as compared to 40 kilometers (25 miles) for the Proposed Action (see Table 5–3).

Workers transferring packages of HEU from the aircraft to the SST/SGTs, and other workers in the vicinity, would receive the same dose regardless of the airfield at which the action would occur. Under Alternative 1,

workers involved in the ground transport would receive higher doses and therefore have a higher risk of an LCF due to the longer time they would spend transporting the packages (see Table 5–8).

Impacts to the public, measured in terms of LCFs, would be greater for Alternative 1 than for the Proposed Action (see Table 5–8). Due to the longer travel distance and differences in population densities, the number of affected persons (people living within 800 meters [0.5 miles] of the road) for Alternative 1 is 384,613 compared to 10,898 for the Proposed Action. The exposed population which, in addition to the affected persons, includes pedestrians and drivers along the route, is also significantly larger for Alternative 1, and accounts for the larger population impact.

Radiation exposure of the MEI is not a function of the distance traveled. Therefore, the MEI for both incident-free and ground transportation accident scenarios receives the same impact under both alternatives.

For ground transportation accidents, nonradiological and radiological risks are a function of the distance traveled. In addition, radiological risks are dependent on the population density along the route. Both of these factors contribute to higher risks for Alternative 1 compared to the Proposed Action (see Table 5–8).

In summary, Alternative 1 has slightly smaller human health impacts than the Proposed Action for the air transport portion of the trip. Conversely, the human health impacts of the ground transport portion of the trip are higher for Alternative 1. The human health impacts are extremely small regardless of the alternative selected.

5.3 Impacts of Alternative 2 – Transport by Ship

Ship transport of the HEU from Russia or Europe to the United States is a potential alternative to transport by aircraft. For this alternative, the ship is assumed to be laden in St. Petersburg and to pass through the Baltic Sea and the North Sea and cross the Atlantic Ocean to a military port on the mid-Atlantic coast of the U.S. At the military port, security would be provided while the packages are transferred to an SST/SGT, which would then transport the HEU to the Y-12 Complex.

5.3.1 Alternative 2 Impacts from Ship Transportation

Ship transportation of the HEU is assumed to be accomplished using the same packages as for air transport. For purposes of comparison with the Proposed Alternative, the Alternative 2 analysis is based on shipping 332 kilograms (732 pounds) of HEU, the amount required to meet the needs of the U.S. research reactors for 2 years. The evaluation includes analysis of transporting this amount of HEU in 48 TN-BGC1 packages or 24 ES-2100 packages. As discussed earlier, the uranium-235 payload of the 5X22 package falls in between the payloads of the other two packages, so the impacts would be expected to do the same.

In St. Petersburg, the packages would be placed in the hold of a ship, such as a Pacific Nuclear Transport Limited vessel, and secured for the trip to the United States. Transportation from St. Petersburg to a representative port on the mid-Atlantic coast is assumed to take 21 days. This is consistent with the crossing time of ships carrying LEU, which typically ranges from 14 to 20 days.

5.3.1.1 Global Commons

Transporting the HEU by ship would add one trip to the many trips of commercial and military vessels passing through the Baltic and North Seas and crossing the Atlantic Ocean each year. Therefore, the ship would not be expected to have a significant impact on the global commons. It is possible that the ship could pass through an area known to be routinely inhabited by the right whale, an endangered species. An area off

the coast of Massachusetts that has a year-round population of right whales could be on the course of a ship from St. Petersburg to a mid-Atlantic port. If the ship enters this area, it would be required to contact the Mandatory Ship Reporting System operated by the U.S. Coast Guard and endorsed by the International Maritime Organization. Operation of this system is intended to reduce the likelihood of a ship striking a right whale. The ship would report its name, call sign, location, course, speed, destination, and route. The system would respond to the ship with contact information on the latest data on whale sightings and avoidance procedures that could prevent a collision (NOAA 2003b).

5.3.1.2 Impacts from Incident-Free Ship Transportation

Radiological impacts during passage through the global commons would be similar to those associated with the Proposed Action. Due to the distance to the public, there would be no radiological impacts to the public. Incident-free radiological risks to members of the crew would result from potential exposure to external radiation when in the vicinity of the HEU packages. Since the HEU would be in a hold below the decks of the ship and at a distance from the wheelhouse and quarters, the principal crew exposure would be to a crew member who enters the hold, for example, to inspect the cargo. The analysis assumes that a member of the crew would take 15 minutes once a week to inspect the cargo. The resulting dose would be 2 millirem for the transport of 332 kilograms (732 pounds) of HEU in TN-BGC1 packages and 1 millirem for shipment in ES-2100 packages. **Table 5–9** shows a comparison of the dose to a member of the crew for this alternative and for the Proposed Action for the transatlantic crossing portion of the action.

5.3.1.3 Impacts from a Ship Accident

The radiological impacts from releases associated with a severe ship accident were calculated using MACCS2. The ship accident with greatest impact is assumed to occur at the port (either in the shipping channel or at the shipping dock). Impacts of this accident are compared to the aircraft landing-stall-fire accident in the Proposed Action.

Impacts of a ship accident were calculated for a representative mid-Atlantic military port that can provide a secure area for making the transfer of HEU from a ship to the SST/SGTs. The port would be representative of military ports such as Norfolk or Charleston. Assumptions in the analysis are sufficiently conservative such that the calculated impacts would likely bound the impacts that would occur at any mid-Atlantic port. The population within 80 kilometers (50 miles) of the representative port is assumed to be about 1.7 million people. The MEI is assumed to be 0.6 kilometers (0.4 miles) from the accident release point, and a noninvolved worker is assumed to be 100 meters (328 feet) away.

The ship accident scenario involves another ship colliding with the ship transporting 332 kilograms (732 pounds) of HEU. The initial collision results in damage to the ship and the HEU packages, resulting in a release of radioactive materials. A subsequent fire causes the release of additional radioactive material to the environment. As with the landing-stall-fire accident of the Proposed Action, the major impact of such an accident would be exposure to and inhalation of the passing plume.

The probability of a port shipping accident that breaches the Type B packages has been estimated to be 5×10^{-9} per port entry (DOE 1996a). The total dose from the shipping port accident to the 1.7 million people living within 80 kilometers (50 miles) of the representative port is 40.9 person-rem. If the accident were to occur, the likelihood of an LCF would be 0.025, or about 1 chance in 40. The radiological risk is much less when the 5×10^{-9} probability of occurrence is considered. As shown in Table 5–9, the radiological risks to the population of this alternative are of the same order of magnitude, but less than those for the Proposed Action. Although the calculated population dose for Alternative 2 (40.9 person-rem) is higher than the dose for the Proposed Action (21.5 person-rem), the radiological risk is lower because the estimated probability

of an accident that breaches the packages is lower, 5×10^{-9} for a ship accident and 2×10^{-8} for an aircraft landing-stall-fire accident.

Table 5–9 Differences in Transportation Risks Between Alternative 2 and the Proposed Action

	Package	*Proposed Action McGhee Tyson Air National Guard Base*	*Alternative 2 Mid-Atlantic Military Port*
		Fatalities or LCFs [a,b]	*Fatalities or LCFs* [a,b]
Air/Ship Transport			
Incident-Free: Crew Member Radiological Risk	TN-BGC1	3.8×10^{-7}	1.2×10^{-6}
	ES-2100	1.9×10^{-7}	6.0×10^{-7}
Accident: Collective Population Radiological Risk	TN-BGC1 or ES-2100	2.6×10^{-10}	1.2×10^{-10}
Accident: MEI Radiological Risk	TN-BGC1 or ES-2100	1.3×10^{-14}	7.4×10^{-14}
Accident: Noninvolved Worker Radiological Risk	TN-BGC1 or ES-2100	2.9×10^{-14}	1.0×10^{-13}
Ground Transport			
Incident-Free: Crew Member Transferring Cargo to SST/SGT Radiological Risk	TN-BGC1 or ES-2100	6.0×10^{-6}	4.8×10^{-6}
Incident-Free: Noninvolved Dock Worker or Guard Radiological Risk	TN-BGC1 or ES-2100	4.5×10^{-7}	2.4×10^{-7}
Incident-Free: Member of SST/SGT Transport Crew Radiological Risk	TN-BGC1	2.6×10^{-7}	5.8×10^{-6}
	ES-2100	3.5×10^{-8}	1.0×10^{-6}
Incident-Free: Collective Public Radiological Risk	TN-BGC1	1.8×10^{-7}	3.9×10^{-6}
	ES-2100	2.8×10^{-8}	6.1×10^{-7}
Accident: Collective Public Nonradiological Fatality Risk	TN-BGC1	2.2×10^{-6}	5.0×10^{-5}
	ES-2100	2.7×10^{-7}	5.8×10^{-6}
Accident: Collective Public Radiological Risk	TN-BGC1	4.1×10^{-13}	8.8×10^{-12}
	ES-2100	4.1×10^{-13}	8.8×10^{-12}

[a] LCF risk accounts for the probability of the event occurring. For incident free operations, the probability is 1. For accidents, the probability of occurrence is substantially less than 1.

[b] The risk values are for transporting 332 kilograms (732 pounds) of HEU.

The radiological risk to the MEI and to a noninvolved worker associated with a port accident are also of the same order of magnitude, but slightly more than the corresponding risks for the Proposed Action (see Table 5–9). The MEI, located 0.6 kilometers (0.4 miles) from the accident, would receive a dose of 24.7 millirem. The resulting increase in the likelihood of an LCF is 1.5×10^{-5}. Multiplying this by the probability of the accident yields the radiological risk, 7.4×10^{-14}. A noninvolved worker, located 100 meters (328 feet) away from an accident, would receive a dose of 33.8 millirem, which would increase the likelihood of an LCF by 2.0×10^{-5}. Multiplying this by the probability of the accident yields the radiological risk of 1.0×10^{-13}. The MEI and noninvolved worker doses and risks for the ship accident are higher than those estimated for the Proposed Action. This is because the ship accident scenario does not result in as much loft of the radioactive material released (e.g., there is no fire during the initial release) as there is in the aircraft accident, which results in more material being close to the ground near the release site. Another factor contributing to the slightly higher dose for the MEI is the assumed closer proximity to the ship at the time

of the accident (for example, a person on shore while the ship is passing through the channel leading to the dock).

5.3.2 Alternative 2 Impacts from Ground Transportation

As with the Proposed Action, ground transportation impacts include those associated with transferring packages from the ship to the SST/SGTs and transportation from the military seaport to the Y-12 Complex. A representative truck route with a distance of 870 kilometers (540 miles) was selected as adequate to encompasses the distance from potential mid-Atlantic ports to the Y-12 Complex. Route characteristics of the assumed route, such as the population density in rural, suburban, and urban zones and the portion of the trip traveled in each zone, are shown in Table 5–3.

5.3.2.1 Impacts from Transfer at Seaport

At the seaport, the necessary number of SST/SGTs would be parked at a secure location awaiting the arrival of the ship. Upon arrival, the packages of HEU would be removed from the ship's hold using a crane and placed on the dock. Workers would need to enter the hold, remove the tie-downs that secured the packages for the ocean voyage, and attached rigging, so they could be removed from the hold. At dockside, the rigging would be removed, packages would be made ready, and loaded and secured in the SST/SGTs. The dose to an exposed worker is a function of the exposure time and distance from the packaged material. The duration for unloading the HEU packages from the ship and securing them in the SST/SGTs is assumed to be about 1 hour with the crew member located about one meter (3 feet) from the package. Since part of the unloading is done with a crane, the amount of time in close contact with the packages, and therefore the dose, is less than for unloading an aircraft (see Table 5–9). The dose to a crew member unloading, inspecting, and reconfiguring packages for SST/SGT transport would be about 8 millirem. The dose to a noninvolved worker at a distance of about 10 meters from the packages is estimated to be 0.4 millirem. The radiological risks to a member of the crew and the noninvolved worker would be 4.8×10^{-6} (1 chance in 200 thousand) and 2.4×10^{-7} (1 chance in 4 million) LCFs, respectively. Inspection by the U.S. Coast Guard or other regulatory agencies could take place at the time of arrival in the port. The dose to such an inspector would be less than the dose to a crew member.

Similar to the scenario of an unloading accident evaluated for the air bases, there is a possibility of an environmental release of a small amount of uranium powder if a handling incident breached a package while unloading the ship (i.e., a package is dropped or punctured). In such an event, the released material would lead to localized contamination with low potential hazards to the workers involved. A qualitative assessment of the impacts of such an accident is presented because the resulting air concentration of radioactivity is dependent on many uncertain variable such as degree of damage to the package, wind speed, wind direction, and location of workers. NNSA personnel familiar with the package contents would oversee the transfer of packages from the ship to the SST/SGTs. If there were an accident, actions to contain the material and mitigate the impacts would be taken, so consequences to the environment or workers would be expected to be few. The airborne release from a mishandling accident would be much smaller than the release from a ship collision at the dock. Therefore, the consequences to the noninvolved workers and the population of any mishandling incidents would be bounded by the evaluated ship accident at the dock.

5.3.2.2 Impacts from Incident-Free Ground Transportation

Impacts from ground transportation from the seaport to the Y-12 Complex were estimated in the same manner as those for the Proposed Action. Differences in the impacts of Alternative 2 and the Proposed Action are related to the differences in population distribution along the route and the duration of travel. The representative travel distance for Alternative 2 is 870 kilometers (540 miles) as compared to 40 kilometers

(25 miles) for the Proposed Action (see Table 5–3). Under Alternative 2, workers involved in the ground transport would receive higher doses and therefore have a higher risk of an LCF due to the longer time they spend transporting the packages (see Table 5–9).

Ground transportation impacts to the public, measured in terms of LCFs, would be greater for Alternative 2 than for the Proposed Action (see Table 5–9). Due to the longer travel distance and differences in population densities, the number of affected persons (people living within 800 meters [0.5 miles] of the road) is 249,121 for Alternative 2 compared to 10,898 for the Proposed Action. The exposed population which, in addition to the affected persons, includes drivers and pedestrians along the route is significantly larger for Alternative 2 which accounts for the larger population impact.

Radiation exposure of the MEI is not a function of the distance traveled. Therefore, the impact on the MEI would be the same for incident-free transportation under Alternative 2 and the Proposed Action. The radiological risks to the MEI from the transportation of 332 kilograms (732 pounds) of HEU in 48 TN-BGC1 or 24 ES-2100 packages are 1.4×10^{-10} (1 chance in 500 million) and 2.2×10^{-11} (1 chance in 35 billion), respectively.

5.3.2.3 Impacts from Ground Transportation Accidents

For ground transportation accidents, nonradiological and radiological risks are a function of the distance traveled. In addition, radiological risks are dependent on the population density along the route. Both of these factors contribute to higher risks for Alternative 2, as compared to the Proposed Action (see Table 5–9).

In general, Alternative 2 would have slightly higher human health impacts than the Proposed Action. However, the human health impacts would still be extremely small for this alternative.

5.4 Impacts of the No Action Alternative

Under the No Action Alternative, the HEU would remain in Russia and not be packaged and transported to the Y-12 Complex. Thus, there would be no impacts to the global commons or populations in the vicinity of the Y-12 Complex, the destination airport or seaport, or along the land transportation route. Further, crews of the aircraft, ship, and SST/SGTs would not be exposed to radiation associated with transporting the material. However, this alternative does not meet the objective of removing excess HEU from the Russian stockpile and bringing it to the United States for use in research reactors.

6.0 References

AirNav, LLC, 2003, *McGhee Tyson Airport Statistics*, available at http://www.airnav.com/airport/ TYS, February 11.

Bush (Bush, George W. and V. V. Putin), 2002, Text of Joint Declaration: The President's Trip to Europe and Russia, available at http://www.whitehouse.gov/new/releases/2002/05, May 5.

Coker, R. E., 1962, *This Great and Wide Sea, An Introduction to Oceanography and Marine Biology*, Harper and Row Publishers, New York, NY.

Delaware River and Bay Authority, 2003, *Civil Air Terminal (CAT) at Dover Air Force Base*, available at http://www.catatdover.com/index.html, February 11.

DOC (U.S. Department of Commerce), 2003, *Profile of General Demographic Characteristics: 2000*, U.S. Census Bureau, Washington, DC, available at http://factfinder.census.gov/main/ www/cen2000.html, February 11.

DOC (U.S. Department of Commerce), 2002, *Census 2000 TIGER/Line Files Technical Documentation*, U.S. Census Bureau, UA 2000, Washington, DC, available at http://www.census.gov/geo/www/tiger/tigerua/ uatgr2k.html, April.

DOC (U.S. Department of Commerce), 2001, *TECHNICAL DOCUMENTATION: Census 2000 Summary File 1 Technical Documentation*, U.S. Census Bureau, SF1/04(RV), Washington, DC, available at http://www2.census.gov/census_2000/datasets/Summary_File_1/, December.

DOE (U.S. Department of Energy), 2003, "ES-2100 Container Description and Graphic," from www.doeal.gov/nnsaota website, National Nuclear Security Administration, Offsite Transportation Authorizations/Certificates, February 4.

DOE (U.S. Department of Energy), 2002a, *Final Environmental Impact Statement for the Proposed Relocation of Technical Area 18 Capabilities and Materials at the Los Alamos National Laboratory*, DOE/EIS-0319, National Nuclear Security Administration, Washington, DC, August.

DOE (U.S. Department of Energy), 2002b, *A Resource Handbook on DOE Transportation Risk Assessment*, National Transportation Program, Albuquerque, NM, July.

DOE (U.S. Department of Energy), 2002c, "National Nuclear Security Administration: Record of Decision of the Final Site-Wide Environmental Impact Statement for the Oak Ridge Y-12 National Security Complex," *Federal Register*, Volume 67, No. 49, March 13.

DOE (U.S. Department of Energy), 2001, *Final Site-Wide Environmental Impact Statement for the Y-12 National Security Complex*, DOE/EIS-0309, National Nuclear Security Administration, Y-12 National Security Complex, Oak Ridge, TN, September.

DOE (U.S. Department of Energy), 2000, *Final Environmental Impact Statement for the Treatment and Management of Sodium-Bonded Spent Nuclear Fuel*, DOE/EIS-0306, Office of Nuclear Energy, Science and Technology, Washington, DC, July.

DOE (U.S. Department of Energy), 1998, *Environmental Assessment for Project Partnership–Transportation of Foreign-Owned Enriched Uranium from the Republic of Georgia*, DOE/EA-1255, and Finding of No Significant Impact, Office of Nonproliferation and National Security, Washington, DC, March.

DOE (U.S. Department of Energy), 1997, "Record of Decision for the Storage and Disposition of Weapons-Usable Fissile Materials Final Programmatic Environmental Impact Statement," *Federal Register*, Volume 62, No. 13, January 21.

DOE (U.S. Department of Energy), 1996a, *Storage and Disposition of Weapons-Usable Fissile Materials Final Programmatic Environmental Impact Statement*, Summary, DOE/EIS-0229, Office of Fissile Materials Disposition, Washington, DC, December.

DOE (U.S. Department of Energy), 1996b, *Final Environmental Impact Statement on a Proposed Nuclear Weapons Nonproliferation Policy Concerning Foreign Research Reactor Spent Nuclear Fuel*, DOE/EIS-0218F, Office of Environmental Management, Washington, DC, February.

DOE (U.S. Department of Energy), 1995, *Proposed Interim Storage of Enriched Uranium Above the Maximum Historical Storage Level of the Y-12 Plant*, DOE/EA-0929, and Finding of No Significant Impact, Oak Ridge, TN, May.

DOE (U.S. Department of Energy), 1994a, *Environmental Assessment for the Proposed Interim Storage at the Y-12 Plant Oak Ridge, Tennessee of Highly Enriched Uranium Acquired from Kazakhstan by the United States*, [redacted], DOE/EA-1006, October.

DOE (U.S. Department of Energy), 1994b, [updated March 2000], *Airborne Release Fractions/Rates and Respirable Fractions for Nonreactor Nuclear Facilities*, DOE-HDBK-3010-94, October.

DOT (U.S. Department of Transportation), 2002, *Competent Authority Certification for a Type B (U) F-85 Fissile Radioactive Materials Package Design Certificate USA/0492/B (U) F-85 [TN-BGC1 Package], Revision 5*, Washington, D.C., September 26.

Estonian Ministry of Environment, 2003, *Geography of the Baltic Sea Area*, available at http:www.envir.ee/baltics/geograph.htm, April 30.

Executive Order 12114, Office of the President, 1979, "Environmental Effects Abroad of Major Federal Actions," January 4.

Global Security, 2002, *McGhee-Tyson ANGB*, available at http://www.globalsecurity.org/military/facility/mcghee-tyson.htm, September 27.

IAEA (International Atomic Energy Agency), 2000, *Regulations for the Safe Transport of Radioactive Material*, 1996 Edition as Revised 2000, Safety Standards Series No. TS-R-1 (ST-1, Revised), Vienna, Austria, June.

IMO (International Maritime Organization), 1998, "IMO News, Number 4," *Mandatory Ship Reporting System to Protect Northern Right Whale Off United States Adopted*, available at http://www.imo.org/home.asp, December.

MKAA (Metropolitan Knoxville Airport Authority), 2003, *McGhee Tyson Airport, The Airport for All East Tennessee*, available at http://www.tys.org/, February 11.

NOAA (National Oceanographic and Atmospheric Administration), 2003a, *About the Whale*, available at http://www.rightwhale.noaa.gov/right_whale/about_whale.html, May 8.

NOAA (National Oceanographic and Atmospheric Administration), 2003b, *The Mandatory Ship Reporting System Fact Sheet*, available at http://www.nmfs.noaa.gov/prot_res/PR2/Conservation_and_Recovery_Program/msr/FactsMSR.html, May 8.

NRC (U.S. Nuclear Regulatory Commission), 1977, *Final Environmental Statement on the Transportation of Radioactive Material by Air and Other Modes*, NUREG-0170, Docket No. PR 71, 73 (40 FR 23768), Office of Standards Development, December.

ORNL (Oak Ridge National Laboratory), 2000, *Transportation Routing Analysis Geographic Information System (WebTRAGIS) User's Manual*, ORNL/TM-2000/86. UT-Battelle, LLC for the U.S. Department of Energy, April.

SNL (Sandia National Laboratories), 2000, *RADTRAN 5 User Guide*, SAND2000-1257, Albuquerque, NM, May.

USAF (U.S. Department of the Air Force), 2003, Fact Sheet: "C-17 Globemaster III," available at http://www.af.mil/news/factsheets/C_17_Globemaster_III.html, February 25.

USEC (U.S. Enrichment Corporation), 1994, *Environmental Assessment for the Purchase of Russian Low Enriched Uranium Derived from the Dismantlement of Nuclear Weapons in the Countries of the Former Soviet Union*, USEC/EA-94001, DOE/EA-0837, Bethesda, MD, January.

436th Airlift Wing, 2003, *The 436th Airlift Wing, Our Mission*, available at http://www/dover.af.mil/org/main.html, February 11.

Appendix A

Agreement Between
the Government of the United States of America
and the Government of the Russian Federation
Concerning the Disposition of
Highly Enriched Uranium Extracted from Nuclear Weapons

AGREEMENT BETWEEN
THE GOVERNMENT OF THE UNITED STATES OF AMERICA
AND THE GOVERNMENT OF THE RUSSIAN FEDERATION
CONCERNING THE DISPOSITION OF
HIGHLY ENRICHED URANIUM EXTRACTED FROM NUCLEAR WEAPONS

The Government of the United States of America and the Government of the Russian Federation, hereinafter referred to as the Parties,

Desiring to arrange the safe and prompt disposition for peaceful purposes of highly enriched uranium extracted from nuclear weapons resulting from the reduction of nuclear weapons in accordance with existing agreements in the area of arms control and disarmament,

Reaffirming their commitment to ensure that the development and use of nuclear energy for peaceful purposes are carried out under arrangements that will further the objectives of' the Treaty on the Non-Proliferation of Nuclear Weapons,

Affirming their commitment to ensure that the nuclear material transferred for peaceful purposes pursuant to this Agreement will comply with all applicable non-proliferation, physical protection, nuclear material accounting and control, and environmental requirements,

Have agreed as follows:

ARTICLE I

PURPOSE

The Parties shall cooperate in order to achieve the following objectives:

(1) The conversion as soon as practicable of highly enriched uranium (HEU) extracted from nuclear weapons resulting from the reduction of nuclear weapons pursuant to arms control agreements and other commitments of the Parties which is currently estimated at approximately 500 metric tons in the Russian Federation, having an average assay of 90 percent or greater of the uranium isotope 235 into low enriched uranium (LEU) for use as fuel in commercial nuclear reactors. For purposes of this Agreement, LEU shall mean uranium enriched to less than 20 percent in the isotope 235; and

(2) The technology developed in the Russian Federation for conversion of HEU resulting from the reduction of nuclear weapons in the Russian Federation may be used for conversion of United States HEU in the United States of America; and

(3) The establishment of appropriate measures to fulfill the non-proliferation, physical protection, nuclear material accounting and control, and environmental requirements of the Parties with respect to HEU and LEU subject to this Agreement.

ARTICLE II

IMPLEMENTATION CONTRACTS AND AGREEMENTS

1. The Parties, through their Executive Agents, shall within six months from entry into force of this Agreement seek to enter into an initial implementing contract to accomplish the objectives set forth in Article I of this Agreement. The Parties may conclude additional implementing contracts or agreements pursuant to this Agreement, as required. For any purchase, the Executive Agents shall negotiate terms (including price), which shall be subject to approval by the Parties.

2. It is the intent of the Parties that the initial implementing contract shall provide for, inter alia:

(i) The purchase by the United States Executive Agent of LEU converted from HEU at facilities in the Russian Federation and sale of such LEU for commercial purposes. The United States will provide information to the Russian Federation on all commercial disposition of such LEU;

(ii)Initial delivery of LEU converted from HEU extracted from nuclear weapons resulting from the reduction of nuclear, weapons pursuant to arms control agreements and other commitments of the Parties by October 1993, if possible;

(iii)Conversion of no less than 10 metric tons having an average assay of 90 percent or greater of the uranium isotope 235 in each of the first five years, and, in each year thereafter, conversion of no less than 30 metric tons of HEU having an average assay of 90 percent or greater of the uranium isotope 235; however, specific amounts will be stipulated in the first and subsequent implementing contracts or agreements;

(iv) The participation of the United States private sector and of Russian enterprises;

(v) The allocation among the United States of America, private sector firms of the United States of America, the Russian Federation, and Russian enterprises of any proceeds or costs arising out of activities undertaken pursuant to any implementing contracts;

(vi) The use by the Russian side of a portion of the proceeds from the sale of LEU converted from HEU for the conversion of defense enterprises, enhancing the safety of nuclear power plants, environmental clean-up of polluted areas and the construction and operation of facilities in the Russian Federation for the conversion of HEU to LEU;

(vii)By agreement of the Parties an equivalent amount of HEU can substitute for the corresponding amount of LEU planned for purchase by the United States Executive Agent.

ARTICLE III

EXECUTIVE AGENTS

Each Party shall designate an Executive Agent to implement this Agreement. For the United States side, the Executive Agent shall be the Department of Energy. For the Russian side, the Executive Agent shall be the Ministry of the Russian Federation of Atomic Energy. After consultation with the other Party, either Party has the right to change its Executive Agent upon 30 days written notice to the other Party. If a governmental corporation is established under United States law to manage the uranium enrichment enterprise of the Department of Energy, it is the intention of the United States Government to designate that corporation as the Executive Agent for the United States side.

ARTICLE IV

PRIORITY OF AGREEMENT

In case of any inconsistency between this Agreement and any implementing contracts or agreements, the provisions of this Agreement shall prevail.

ARTICLE V

ADDITIONAL MEASURE

1. The Executive Agent of the Russian Federation shall ensure that the quality of LEU derived from HEU subject to this Agreement is such that it is convertible to LEU usable in commercial reactors. Specifications shall be agreed upon in the process of negotiating the initial and subsequent implementing contracts.

2. The conversion of HEU subject to this Agreement shall commence as soon as possible after the entry into force of the initial implementing contract.

3. The Parties shall, to the extent practicable, seek to arrange for more rapid conversion of HEU to LEU than that provided for in Article II (2) (iii).

4. The United States of America shall use LEU acquired pursuant to this Agreement and its implementing contracts and agreements, when subject to United States jurisdiction and control, for peaceful purposes only.

5. LEU acquired by the United States of America pursuant to this Agreement, and implementing contracts and agreements related to it, shall be subject to safeguards in accordance with the November 18, 1977, Agreement: Between the United States of America and the International Atomic Energy Agency (IAEA) for the Application of Safeguards in connection with the Treaty on the Non-Proliferation of Nuclear Weapons.

6. The Parties shall maintain physical protection of HEU and LEU subject to this Agreement. Such protection shall, at a minimum, provide protection comparable to the recommendation set forth in IAEA document INFCIRC/225/REV.2, concerning the physical protection of nuclear material.

7. If the Parties enter into an agreement for cooperation concerning the peaceful uses of nuclear energy, nuclear material acquired by the United States of America pursuant to this Agreement and its implementing contracts and agreements, when subject to United States jurisdiction or control, shall be subject to the terms and conditions of that Agreement for cooperation.

8. The activities of the United States Government under this Agreement, or any implementing contract or agreement, shall be subject to the availability of United States Government funds.

9. In the event the United States Government does not have funds available for implementation of this Agreement, the Executive Agent of the Russian Federation reserves the option to obtain funding for implementation of this Agreement from any private United States company.

10. Prior to the conclusion of any implementing contract, the Parties shall establish transparency measures to ensure that the objectives of this Agreement are met, including provisions for nuclear material accounting and control and access, from the time that HEU is made available for conversion until it is converted into LEU. Specific transparency measures shall be established in the same time frame as the negotiation of the initial implementing contract, and shall be executed by a separate agreement.

11. Prior to the conclusion of any implementing contract, the Parties shall agree on appropriate governing provisions for entry and exit, liability, and status of Personnel, exemptions for taxes and other duties, and applicable law.

12. The Executive Agent of the United States of America shall use the LEU converted from HEU in such a manner so as to minimize disruptions in the market and maximize the overall economic benefit for both Parties. This Agreement shall have no effect on contracts between Russian enterprises and United States companies for the delivery of uranium products which are currently in force and consistent with United States and Russian law.

13. This Agreement places no limitations on the right of the Russian Federation to dispose of LEU derived from HEU extracted from nuclear weapons resulting from the reduction of nuclear weapons pursuant to arms control agreements and other commitments of the Parties beyond the specific commitments set forth herein.

ARTICLE VI

ENTRY INTO FORCE, DURATION AND AMENDMENTS

1. This Agreement shall enter into force upon signature and shall remain in force until the full amount of HEU, provided for in paragraph 1 of Article I is converted into LEU, delivered, and supplied to commercial customers.

2. Each Party may propose amendments to this Agreement. Agreed amendments shall enter into force upon signature and shall remain in force so long as this Agreement remains in force.

3. Each Party shall have the right to terminate this Agreement upon 12 months written notification to the other Party.

Done at Washington this 18th day of February, 1993, in duplicate in the English and Russian languages, both texts being equally authentic.

FOR THE GOVERNMENT OF THE UNITED STATES OF AMERICA:	FOR THE GOVERNMENT OF THE RUSSIAN FEDERATION:

Appendix B

Joint Statement
Secretary Abraham and Minister Rumyantsev

Joint Statement
Secretary Abraham and Minister Rumyantsev
September 16, 2002

In their May 2002 Summit in Moscow, the President of the United States of America George W. Bush and the President of the Russian Federation V.V. Putin agreed to establish a joint experts group to work out proposals on near-and long-term, bilateral and multilateral means to reduce inventories of highly enriched uranium (HEU) and plutonium. The United States and Russia recognize their common interest in guaranteeing the irreversibility of nuclear disarmament, strengthening nonproliferation and combating terrorism by accelerating the disposition of excess nuclear weapon materials.

Ambassador Linton Brooks and First Deputy Minister Mikhail Solonin co-chaired the Expert Group on Accelerated Nuclear Material Disposition. We highly appreciate the results of the Expert Group. We are pleased with the accelerated pace the group maintained, finishing the report three months earlier than their initial deadline. The report will be forwarded to Presidents George W. Bush and V.V. Putin.

The Expert Group identified several areas where joint cooperation could lead to reduction of HEU over-and-above commitments already in place under existing agreements. These include:

1. Creation of a strategic reserve in the United States from Russian HEU down blended into Low Enriched Uranium (LEU);
2. Increase in the rate and quantity of HEU converted to LEU under the Nuclear Material Consolidation and Conversion Project;
3. Use of LEU down blended from Russian HEU to fuel reactors in Western countries;
4. Use of Russian HEU to fuel selected United States research reactors, until cores are converted to LEU, and
5. In parallel, work on accelerated development of LEU fuel for both Soviet-designed and United States-designed research reactors.

The Expert Group also identified potential new areas of near-term cooperation for weapon plutonium disposition. These include:

1. Fabrication of additional mixed oxide fuel (MOX) for use in Russian reactors, utilizing additional weapons-grade plutonium under the 2000 Agreement, and
2. A variation of this scenario that would provide for the possible use of some MOX fuel in Russia and for leasing or exporting of the remainder for use in other countries.

The Expert Group will continue to study additional options that could be relevant in the future, taking into account their technical feasibility, impacts on commercial nuclear fuel market industries and required financial resources.

Media Contact:
Jeanne Lopatto, 202/586-4940
Corry Schiermeyer, 202/586-5806

Release No. PR-02-
Release Date: September 17, 2002