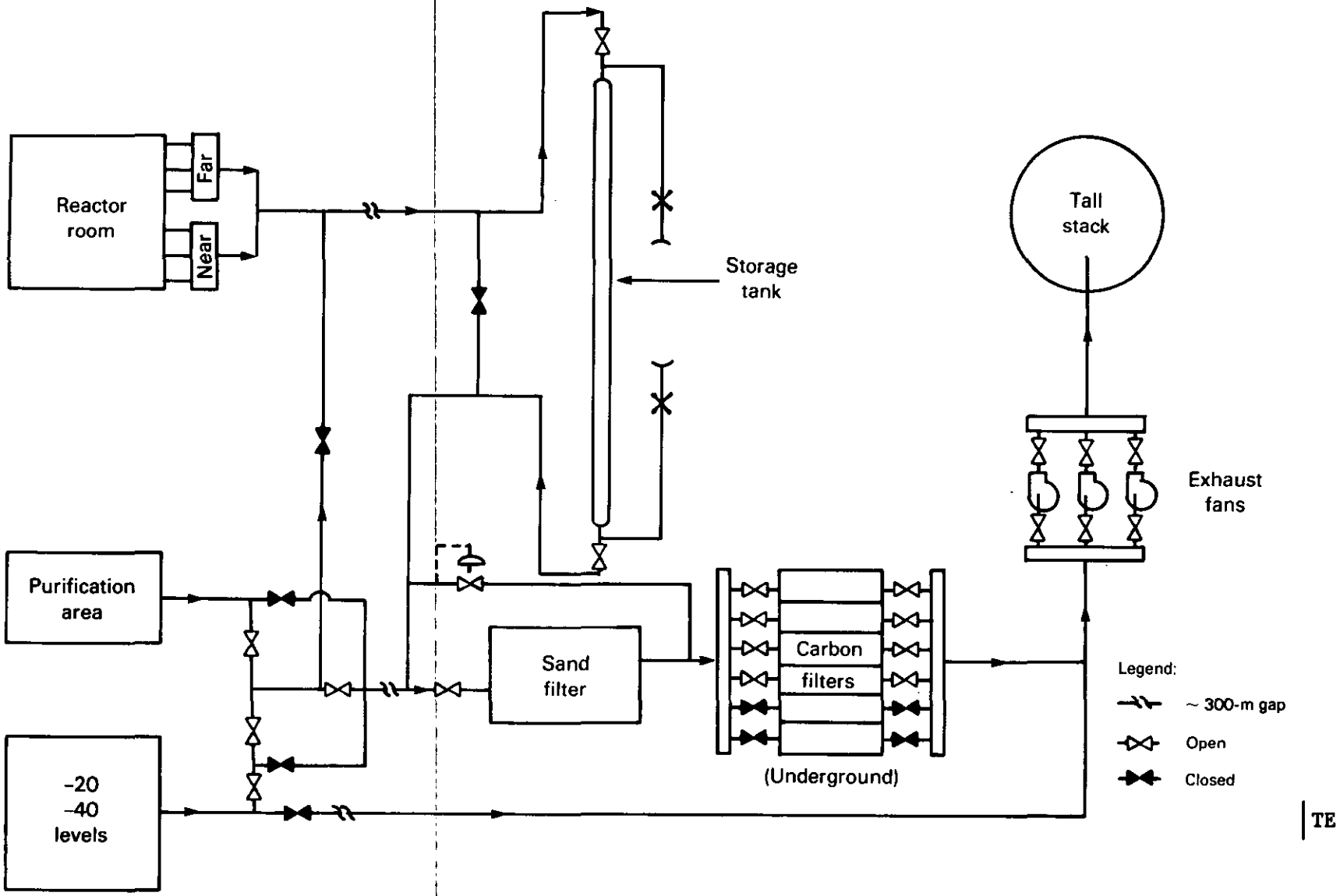

Figure 4-13. Remote storage confinement system.