Appendix L
Evaluation of Human Health Effects From Transportation

L.1 INTRODUCTION

The overland transportation of any commodity involves a risk to both transportation crew members and members of the public. This risk results directly from transportation-related accidents and indirectly from the increased levels of pollution from vehicle emissions, regardless of the cargo. The transportation of certain materials, such as hazardous or radioactive waste, can pose an additional risk due to the unique nature of the material. In order to permit a complete appraisal of the environmental impacts of the proposed action and alternatives, the human health risks associated with the overland transportation of plutonium and other hazardous materials have been assessed.

This appendix provides an overview of the approach used to assess the human health risks that may result from the overland transportation. The appendix includes a discussion of the scope of the assessment, analytical methods used for the risk assessment (i.e., computer models), important assessment assumptions, and a determination of potential transportation routes. It also presents the results of the assessment. In addition, to aid in the understanding and interpretation of the results, specific areas of uncertainty are described, with an emphasis on how the uncertainties may affect comparisons of the alternatives.

The approach used in this appendix is modeled after that used in the *Storage and Disposition of Weapons-Usable Fissile Materials Final Programmatic Environmental Impact Statement* (PEIS) (DOE 1996a). The fundamental assumptions used in the analysis for the *Surplus Plutonium Disposition Environmental Impact Statement* are consistent with those used in the PEIS, and the same computer codes and generic release and accident data are used.

The risk assessment results are presented in this appendix in terms of "per-shipment" risk factors, as well as for the total risks associated with each alternative. Per-shipment risk factors provide an estimate of the risk from a single hazardous material shipment between a specific origin and destination. The total risks for a given alternative are found by multiplying the expected number of shipments by the appropriate per-shipment risk factors.

L.2 SCOPE OF ASSESSMENT

The scope of the overland transportation human health risk assessment, including the alternatives and options, transportation activities, potential radiological and nonradiological impacts, transportation modes considered, and receptors, is described below. Additional details of the assessment are provided in the remaining sections of the appendix.

- Proposed Action and Alternatives—The transportation risk assessment conducted for the SPD EIS estimates the human health risks associated with the transportation of plutonium and other hazardous materials for a number of disposition alternatives.

- Radiological Impacts—For each alternative, radiological risks (i.e., those risks that result from the radioactive nature of the plutonium and other hazardous materials) are assessed for both incident-free (i.e., normal) and accident transportation conditions. The radiological risk associated with incident-free transportation conditions would result from the potential exposure of people to external radiation in the vicinity of a loaded shipment. The radiological risk from transportation accidents would come from the potential release and dispersal of radioactive material into the environment during an accident and the

subsequent exposure of people through multiple exposure pathways (i.e., exposure to contaminated ground or air, or ingestion of contaminated food).

- All radiological impacts are calculated in terms of effective dose and associated health effects in the exposed populations. The radiation dose calculated is the total effective dose equivalent, which is the sum of the effective dose equivalent from external radiation exposure and the 50-year committed effective dose equivalent from internal radiation exposure (NRC 1998). Radiation doses are presented in units of roentgen equivalent man (rem) for individuals and person-rem for collective populations. The impacts are further expressed as health risks in terms of latent cancer fatalities (LCFs) and cancer incidence in exposed populations. The health risk conversion factors (expected health effects per dose absorbed) were taken from the *1990 Recommendations of the International Commission on Radiological Protection* (ICRP 1991).

- Nonradiological Impacts—In addition to the radiological risks posed by overland transportation activities, vehicle-related risks are also assessed for nonradiological causes (i.e., related to the transport vehicles and not the radioactive cargo) for the same transportation routes. The nonradiological transportation risks are independent of the radioactive nature of the cargo and would be incurred for similar shipments of any commodity. The nonradiological risks are assessed for both incident-free and accident conditions. Nonradiological risks during incident-free transportation conditions would be caused by potential exposure to increased vehicle exhaust emissions. The nonradiological accident risk refers to the potential occurrence of transportation accidents that directly result in fatalities unrelated to the cargo. State-specific transportation fatality rates are used in the assessment. Nonradiological risks are presented in terms of estimated fatalities.

- Transportation Modes—All overland shipments were assumed to take place by truck.

- Receptors—Transportation-related risks are calculated and presented separately for workers and members of the general public. The workers considered are truck crew members involved in the actual overland transportation. The general public includes all persons who could be exposed to a shipment while it is moving or stopped enroute. Potential risks are estimated for the collective populations of exposed people, as well as for the hypothetical maximally exposed individual. The collective population risk is a measure of the radiological risk posed to society as a whole by the alternative being considered. As such, the collective population risk is used as the primary means of comparing various alternatives.

L.3 PACKAGING AND REPRESENTATIVE SHIPMENT CONFIGURATIONS

Regulations that govern the transportation of radioactive materials are designed to protect the public from the potential loss or dispersal of radioactive materials as well as from routine radiation doses during transit. The primary regulatory approach to promote safety is through the specification of standards for the packaging of radioactive materials. Because packaging represents the primary barrier between the radioactive material being transported and radiation exposure to the public and the environment, packaging requirements are an important consideration for the transportation risk assessment. Regulatory packaging requirements are discussed briefly below and in Chapter 5. In addition, the representative packaging and shipment configurations assumed for the SPD EIS are described.

L.3.1 Packaging Overview

Although several Federal and State organizations are involved in the regulation of radioactive materials transportation, primary regulatory responsibility resides with the U.S. Department of Transportation (DOT) and the U.S. Nuclear Regulatory Commission (NRC). All transportation activities must take place in accordance with

the applicable regulations of these agencies specified in Title 49 of the Code of Federal Regulations (CFR) Part 173 (DOT 1992a) and 10 CFR 71 (NRC 1996).

Transportation packaging for small quantities of radioactive materials must be designed, constructed, and maintained to contain and shield their contents during normal transport conditions. For large quantities and for more highly radioactive material, such as spent nuclear fuel or plutonium, they must contain and shield their contents in the event of severe accident conditions. The type of packaging used is determined by the total radioactive hazard presented by the material within the packaging; 10 CFR 71 (NRC 1996) provides the rules for this determination. Four basic types of packaging are used: Excepted, Industrial, Type A, and Type B. Another packaging option, Strong and Tight, is still available for some domestic shipments.

Excepted packagings are limited to transporting materials with extremely low levels of radioactivity. Industrial packagings are used to transport materials that, because of their low concentration of radioactive materials, present a limited hazard to the public and the environment. Type A packagings are designed to protect and retain their contents under normal transport conditions and must maintain sufficient shielding to limit radiation exposure to handling personnel. These packagings are used to transport radioactive materials with higher concentrations or amounts of radioactivity than Excepted or Industrial packagings. Strong and Tight packagings are used in the United States for shipment of certain materials with low levels of radioactivity, such as natural uranium and rubble from the decommissioning of nuclear reactors. Type B packages are described in detail in Appendix L.3.1.6.

L.3.1.1 Uranium Hexafluoride Packaging

DOE would ship uranium hexafluoride in a commercial vehicle from the Portsmouth Gaseous Diffusion Plant to a fuel fabrication facility in Model 30B cylinders, which are Type A packages (for the purposes of the SPD EIS). Uranium hexafluoride shipments are regulated under 49 CFR 173.420, which requires the packaging to be in accordance with ANSI N14.1, *Uranium Hexafluoride–Packaging for Transport*. Because uranium hexafluoride breaks down into hydrofluoric acid and uranyl fluoride when exposed to air, packages would be marked with the primary hazard label as “Radioactive Yellow-II” and a secondary hazard label as “Corrosive.” The transport vehicle would be required to show the primary placard “Radioactive” and the secondary placard “Corrosive.”

L.3.1.2 Uranium Dioxide Packaging

DOE would ship uranium dioxide in a commercial vehicle from the fuel fabrication facility to DOE’s mixed oxide (MOX) facility in gasketed, open-head, 208-l (55-gal) drums with heavy plastic liners, which are Industrial Package Type 1 packages. Uranium dioxide shipments are regulated under 49 CFR 173.425. Because uranium dioxide is a low-specific-activity material, no primary hazard label would be required, and because it is chemically stable, no secondary hazard label would be required. The transport vehicle would be required to show the primary placard “Radioactive” and no secondary placard.

L.3.1.3 MOX Fuel Packaging

DOE will design the container for the MOX fuel assemblies. For analysis purposes, it is assumed that DOE would ship the unirradiated MOX fuel bundles in a safe, secure trailer/SafeGuards Transport (SST/SGT) to the reactor site(s) in Type B packages. Two conceptual packaging ideas are end-loading and lateral-loading packages (Ludwig et al. 1997). The fuel assembly weight per container is approximately 2800 kg (6,000 lb) for either pressurized water reactor (PWR) or boiling water reactor (BWR) fuel. The container could hold either four PWR or eight BWR assemblies.

L.3.1.4 Highly Enriched Uranium Packaging

DOE would ship highly enriched uranium (HEU) in an SST/SGT from the pit conversion facility to the Y–12 facility near Oak Ridge, Tennessee. The DOE-approved container type for these shipments is the DT–22.

L.3.1.5 Plutonium Packaging

DOE would ship all plutonium in Type B containers. DOE would ship nonpit plutonium in an SST/SGT from DOE sites (Hanford, Idaho National Engineering and Environmental Laboratory [INEEL], Lawrence Livermore National Laboratory [LLNL], Los Alamos National Laboratory [LANL], Rocky Flats Environmental Technology Site [RFETS], and Savannah River Site [SRS]) to the immobilization facility (Hanford or SRS) in a variety of containers, such as Type 3013, Type 2R, and Foodpac containers, which would be transported inside various casks, such as radial reflector, SAFEKEG (Type 9517), Model 60 FFTA DFA pins shipping or Specification 6M packages. DOE would ship plutonium pits from DOE sites to the pit conversion facility in DOE-approved FL containers and the piece parts resulting from pit disassembly in DOE-approved UC–609 and USA/9975 containers. Plutonium dioxide produced at the pit conversion facility would be loaded into packaging that meets DOE-STD-3013-96, *Criteria for Preparing and Packaging Plutonium Metals and Oxides for Long-Term Storage* (DOE 1996b) or equivalent. This package provides for safe storage of plutonium oxides for at least 50 years or until final disposition and serves as the primary containment vessel for shipping. DOE-STD-3013-96 specifies a design goal that the Type 3013 container could be shipped in a qualified shipping container without further reprocessing or repackaging. The Type 3013 primary containment vessel is designed for shipping and would be compatible with a Type B package. No Type B package has been specifically constructed or licensed for shipping DOE-STD-3013-96 primary containment vessels.

A Type B package is required when transporting commercial quantities of plutonium materials, including unirradiated MOX fuel assemblies. DOE is developing a conceptual design for a MOX container that optimizes SST/SGT load-carrying capacity and ensures compatibility with fuel-handling systems at commercial reactors (Ludwig et al. 1997).

L.3.1.6 Overview of Type B Containers

The transportation of highway-route controlled quantities of plutonium (more than a few grams, depending on activity level) requires the use of Type B packaging. In addition to meeting the standards for Type A packaging, Type B packaging must provide a high degree of assurance that, even in severe accidents, the integrity of the package will be maintained with essentially no loss of the radioactive contents or serious impairment of the shielding and maintain subcriticality capability. Type B packaging must satisfy stringent testing criteria specified in 10 CFR 71 (NRC 1996). The testing criteria were developed to simulate severe accident conditions, including impact, puncture, fire, and water immersion.

Beyond meeting DOT standards showing it can withstand normal conditions of transport without loss or dispersal of its radioactive contents or allowance of significant radiation fields, Type B packaging must also meet the 10 CFR 71 requirements administered by the NRC. The complete sequence of tests is listed below:

- Free-Drop Test—A 9-m (30-ft) free-drop onto a flat, essentially unyielding, horizontal surface, striking the surface in a position for which maximum damage to the package is expected.

- Puncture Test—A 1-m (40-in) drop onto the upper end of a 15-cm (6-in) diameter solid, vertical, cylindrical, mild steel bar (at least 20-cm [8-in] long) mounted on an essentially unyielding, horizontal surface.

- Thermal Test—Exposure to a heat flux of no less than that of a thermal radiation environment of 800 °C (1,475 °F) with an emissivity coefficient of at least 0.9 for a period of 30 minutes.

- Water Immersion Test—A separate, undamaged package specimen is subjected to water pressure equivalent to immersion under a head of water of at least 15-m (50-ft) for no less than 8 hours.

Effective April 1, 1996, 10 CFR 71 was revised to require an additional immersion test in 200 m (660 ft) of water for Type B casks designed to contain material with activity levels greater than 1 million curies (Ci) (NRC 1996). Containers used for shipping plutonium will not necessarily be subject to this test because they will contain much less than one million curies. The packaging may also be required to undergo the crush test if it is considered a light-weight, low-density package as most drum-type packages are. The crush test consists of dropping a 500-kg (1100-lb) steel plate from 9 m (30 ft) onto the package, which is resting on an essentially unyielding surface.

Additional restrictions apply to package surface contamination levels, but these restrictions are not limiting for the transportation radiological risk assessment. For risk assessment purposes, it is important to note that all packaging of a given type is designed to meet the same performance criteria. Therefore, two different Type B designs would be expected to perform similarly during incident-free and accident transportation conditions. The specific containers selected, however, will determine the total number of shipments necessary to transport a given quantity of plutonium.

External radiation from a package must be below specified limits that minimize the exposure of the handling personnel and general public. For these types of shipments, the external radiation dose rate during normal transportation conditions must be maintained below the following limits of 49 CFR 173 (DOT 1992a):

- 10 mrem/hr at any point 2 m (6.6 ft) from the vertical planes projected by the outer lateral surfaces of the transport vehicle (referred to as the regulatory limit throughout this document)

- 2 mrem/hr in any normally occupied position in the transport vehicle

L.3.2 Safe, Secure Transportation

DOE anticipates that any transportation of plutonium pits, nonpit plutonium, plutonium dioxide, MOX fuel, or HEU would be required to be made through use of the Transportation Safeguards System and shipped using SST/SGTs. The SST/SGT is a fundamental component of the Transportation Safeguards System. The Transportation Safeguards System is operated by the DOE Transportation Safeguards Division of the Albuquerque Operations Office for the DOE Headquarters Office of Defense Programs. Based on operational experience between FY84 and FY98, the mean probability of an accident requiring the tow-away of the SST/SGT was 0.058 accident per million kilometers (0.096 accident per million miles). By contrast, the rate for commercial trucking in 1989 was about 0.3 accident per million kilometers (0.5 accident per million miles). Commercial trucking accident rates (Saricks and Kvitek 1994) were used in the human health effects analysis. Since its establishment in 1975, the Transportation Safeguards Division has accumulated more than 151 million km (94 million mi) of over-the-road experience transporting DOE-owned cargo with no accidents resulting in a fatality or release of radioactive material.

The SST/SGT is a specially designed component of an 18-wheel tractor-trailer vehicle. Although details of vehicle enhancements and some operational aspects are classified, key characteristics of the SST/SGT system include the following:

- Enhanced structural characteristics and a highly reliable tie-down system to protect cargo from impact
- Heightened thermal resistance to protect the cargo in case of fire (newer SST/SGT models)
- Established operational and emergency plans and procedures governing the shipment of nuclear materials
- Various deterrents to prevent unauthorized removal of cargo
- An armored tractor component that provides courier protection against attack and contains advanced communications equipment
- Specially designed escort vehicles containing advanced communications and additional couriers
- 24-hour-a-day real-time communications to monitor the location and status of all SST/SGT shipments via DOE's Security Communication system
- Couriers who are armed Federal Officers, receive rigorous specialized training, and who are closely monitored through DOE's Personnel Assurance Program
- Significantly more stringent maintenance standards than those for commercial transport equipment
- Conduct of periodic appraisals of the Transportation Safeguards System operations by the DOE Office of Defense Programs to ensure compliance with DOE orders and management directives, and continuous improvement in transportation and emergency management programs

L.3.3 Ground Transportation Route Selection Process

According to DOE guidelines, plutonium shipments must comply with both NRC and DOT regulatory requirements. Commercial shipments are also required by law to comply with both NRC and DOT requirements. NRC regulations cover the packaging and transport of plutonium, whereas DOT specifically regulates the carriers and the conditions of transport, such as routing, handling and storage, and vehicle and driver requirements. The highway routing of nuclear material is systematically determined according to DOT regulations 49 CFR 171–179 and 49 CFR 397 for commercial shipments. The dates and times that specific transportation routes would be used are classified information and would not be publicized before a shipment.

The DOT routing regulations require that a shipment of a "highway route-controlled quantity" of radioactive material be transported over a preferred highway network including interstate highways, with preference toward interstate system bypasses around cities, and State-designated preferred routes. A State or tribe may designate a preferred route to replace or supplement the interstate highway system in accordance with DOT guidelines (DOT 1992b).

Carriers of highway route-controlled quantities are required to use the preferred network, unless moving from origin to the nearest interstate or from the interstate to the destination, when making necessary repair or rest stops, or when emergency conditions render the interstate unsafe or impassible. The primary criterion for selecting the preferred route for a shipment is travel time. Preferred routing takes into consideration accident rate, transit time, population density, activities, time of day, and day of week.

The HIGHWAY computer code (Johnson et al. 1993) may be used for selecting highway routes in the United States. The HIGHWAY database is a computerized road atlas that currently describes about 386,400 km (240,000 mi) of roads. The Interstate System and all U.S. (U.S.-designated) highways are completely described in the database. In addition, most of the principal State highways and many local and community roads are also identified. The code is updated periodically to reflect current road conditions and has been benchmarked against reported mileages and observations of commercial truck firms. Features in the HIGHWAY code allow the user to select routes that conform to DOT regulations. Additionally, the HIGHWAY code contains data on the population densities along the routes. The distance and population data from the HIGHWAY code are part of the information used for the transportation impact analysis in the SPD EIS.

L.4 METHODS FOR CALCULATING TRANSPORTATION RISKS

The overland transportation risk assessment methodology is summarized in Figure L–1. After the alternatives were identified and goals of the shipping campaign were understood, the first step was to collect data on material characteristics and accident parameters. Physical, radiological, and packaging data were provided in reports from the DOE national laboratories. Accident parameters are largely based on the DOE-funded study of transportation accidents (Saricks and Kvitek 1994).

Representative routes that may be used for the shipment of plutonium were selected using the HIGHWAY code. These routes were selected for risk assessment purposes. They do not necessarily represent the actual routes that would be used to transport nuclear materials. Specific routes cannot be identified in advance because the routes would not be finalized until DOE has actually planned the shipping campaign. The selection of the actual route would be responsive to environmental and other conditions that would be in effect or could be predicted at the time of shipment. Such conditions could include adverse weather conditions, road conditions, bridge closures, and local traffic problems. For security reasons, details about a planned shipment would not be publicized before the shipment.

The first analytic step in the ground transportation analysis was to determine the incident-free and accident risk factors, on a per-shipment basis, for transportation. Risk factors, as any risk estimate, are the product of the probability of exposure and the magnitude of the exposure. Accident risk factors were calculated for radiological and nonradiological traffic accidents. The probabilities, which are much lower than 1, and the magnitudes of exposure were multiplied, yielding risk numbers. Incident-free risk factors were calculated for crew and public exposure to radiation emanating from the shipping container (cask) and public exposure to the chemical toxicity of the transportation vehicle exhaust. The probability of incident-free exposure is unity (one).

Radiological risk factors are expressed in units of rem. Later in the analysis, they are multiplied by the *1990 Recommendations of the International Commission on Radiological Protection* (ICRP 1991) conversion factors and estimated number of shipments to give risk estimates in units of LCFs. The vehicle emission risk factors are calculated in LCFs, and the vehicle accident risk factors are calculated in fatalities.

For each alternative, risks were assessed for both incident-free transportation and accident conditions. For the incident-free assessment, risks were calculated for collective populations of potentially exposed individuals and for maximally exposed individuals. The accident assessment consists of two components: (1) a probabilistic accident risk assessment that considers the probabilities and consequences of a range of possible transportation accident environments, including low-probability accidents that have high consequences and

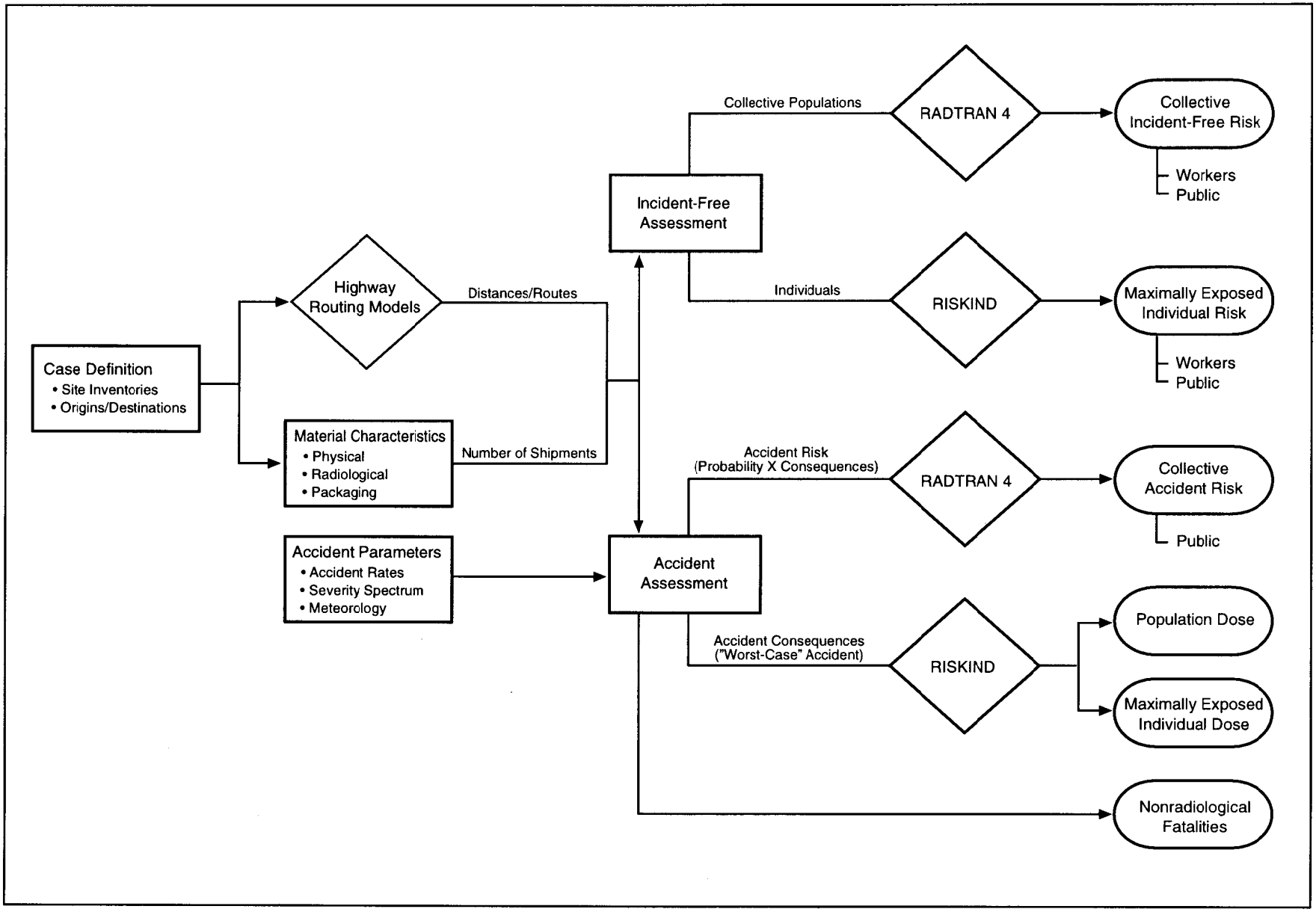

Figure L–1. Overland Transportation Risk Assessment

high-probability accidents that have low consequences, and (2) an accident consequence assessment that considers only the consequences of the most severe transportation accidents postulated.

The RADTRAN 4 computer code (Neuhauser and Kanipe 1995) is used for incident-free and accident risk assessments to estimate the impacts on collective populations. RADTRAN 4 was developed by Sandia National Laboratories to calculate population risks associated with the transportation of radioactive materials by a variety of modes, including truck, rail, air, ship, and barge.

The RADTRAN 4 population risk calculations take into account both the consequences and probabilities of potential exposure events. The collective population risk is a measure of the total radiological risk posed to society as a whole by the alternative being considered. As such, the collective population risk is used as the primary means of comparing the various alternatives. The RISKIND computer code (Yuan et al. 1995) is used to estimate the incident-free doses to maximally exposed individuals and for estimating impacts for the accident consequence assessment. The RISKIND computer code was developed for DOE's Office of Civilian Radioactive Waste Management to analyze the exposure of individuals during incident-free transportation. In addition, the RISKIND code was designed to allow a detailed assessment of the consequences to individuals and population subgroups from severe transportation accidents under various environmental settings.

The RISKIND calculations were conducted to supplement the collective risk results calculated with RADTRAN 4. Whereas the collective risk results provide a measure of the overall risks of each alternative, the RISKIND calculations are meant to address areas of specific concern to individuals and population subgroups. Essentially, the RISKIND analyses are meant to address "What if" questions, such as "What if I live next to a site access road?" or "What if an accident happens near my town?"

If highly specialized analytic codes had been used to model SST/SGT behavior in an accident (*DOE-Developed Analysis of Dispersal Risk Occurring in Transportation* or ADROIT [Clauss et al. 1995:689–696]), the code would have provided a probabilistic risk analysis of special nuclear materials shipped in an SST/SGT. ADROIT is designed to provide a focused analysis of a release caused by partial detonation of explosive material. The approach and the code could be tailored for the materials shipped as part of the surplus plutonium disposition program. However, detailed thermal and mechanical models have not been created for most of the packages used in the SPD EIS.

L.5 ALTERNATIVES, PARAMETERS, AND ASSUMPTIONS

The transportation risk assessment is designed to ensure—through uniform and judicious selection of models, data, and assumptions—that relative comparisons of risk among the various alternatives are meaningful. The major input parameters and assumptions used in the transportation risk assessment are discussed below.

L.5.1 Transportation Alternatives

The proposed action would involve transporting plutonium and other nuclear materials between DOE and commercial sites. Except for the No Action Alternative, each alternative in the SPD EIS has extensive and unique requirements for the transportation of hazardous materials. In this section, the assumptions and logic used to model the intersite transportation requirements are described.

Alternatives 2 through 12 require transporting plutonium metal and pits from various DOE sites to the pit conversion facility at Hanford, INEEL, Pantex, or SRS. The pit conversion facility would disassemble pits and convert the plutonium metal into plutonium dioxide. During the pit disassembly process, HEU would be recovered and shipped from the pit conversion facility to the Y–12 facility at Oak Ridge. In addition, some pit parts would be recovered and shipped to LANL. The plutonium dioxide would be shipped to the MOX facility

or the immobilization facility depending on the alternative. In many of the alternatives, the pit conversion facility is located on the same site as the MOX facility or immobilization facility, limiting the need for intersite transportation of the plutonium dioxide. In these alternatives, the plutonium dioxide would be transported between the facilities via a secure tunnel between the facilities.

In addition to reducing the number of trips required and the distance that would have to be traveled to transport surplus pits to the pit conversion facility, by placing the pit conversion facility at Pantex the dose associated with repackaging pits for intersite shipment could be reduced by nearly 40 percent. This is because pits can be transferred to the pit conversion facility at Pantex in their current storage containers (mainly the AL–R8 container) without having to be repackaged. If the pits are transported to another site, they have to be moved to a shipping container (e.g., FL-type, 9975).

Based on estimates presented in the *Final EIS for the Continued Operation of Pantex and Associated Storage of Nuclear Weapons Components (Pantex Sitewide EIS)* (DOE 1996c), about 50 workers would be needed to repackage approximately 13,000 pits from their current storage containers into containers that could also be used for shipping.[1] Work is currently under way to repackage pits from the AL–R8 container into the AL–R8 sealed insert (SI) container as discussed in the *Supplement Analysis for the Final Environmental Impact Statement for the Continued Operation of the Pantex Plant and Associated Storage of Nuclear Weapons Components—AL–R8 Sealed Insert Container* (DOE 1998). This effort could be completed over 10 years, and the estimated annual dose received from repackaging activities would be about 208 mrem per worker (Low 1999). By locating the pit conversion facility at Pantex, it is expected that the additional dose associated with repackaging the surplus pits into shipping containers could be avoided. This would effectively reduce the total expected dose for these activities by 50 percent. If the pit conversion facility were sited at Pantex, the pits would be slowly moved from storage locations in storage containers on specially designed vehicles to the pit conversion facility instead of having to be put into offsite shipping containers. Over the 10-year operating life of the pit conversion facility, this would reduce the total estimated dose to involved Pantex transportation and staging workers by 104 person-rem from 208 person-rem to 104 person-rem.[2] Under either scenario, the estimated number of excess cancer fatalities associated with repackaging activities would be 0.1 or less.

In August 1998, DOE prepared a supplement analysis (DOE 1998) for the *Pantex Sitewide EIS* that compares all environmental impact parameters to those analyzed in the *Pantex Sitewide EIS* and final determinations made in the Record of Decision that was signed on January 17, 1997, with respect to the use of the AL–R8 SI. Results of the analysis indicated that both the AT–400A container and the modified AL–R8 container, or AL–R8 SI, comply with the latest pit storage specifications to provide an improved storage environment for the pits and would be considered feasible solutions to long-term pit storage at Pantex. The containers were further analyzed with respect to the parameters established in the *Pantex Sitewide EIS* for public, personnel, and environmental impact potential. Based on conclusions drawn from this analysis, DOE concluded that the use of the AL–R8 SI containers does not constitute new circumstances or information or substantial change in the proposed action relevant to environmental concerns; therefore, no supplemental EIS, no new EIS, nor further NEPA documentation is required.

---

[1] In the analysis presented in the *Pantex Sitewide EIS* (DOE 1996c), pits are assumed to be repackaged in AT–400A containers. The amount of effort involved in repackaging a pit in an AT–400A container is more intense than the effort needed to repackage a pit in an FL-type container or equivalent; therefore, the doses would be expected to be higher. Since the *Pantex Sitewide EIS* was completed, it has been decided that surplus pits would not be repackaged in AT–400A containers. As a result, the dose estimates associated with repackaging pits as presented in the *Pantex Sitewide EIS* are conservatively high for the SPD EIS. No effort has been made to reestimate the dose associated with repackaging pits. The doses presented in the SPD EIS are based on using the AT–400A container, and therefore represent upper bounds on the expected dose to involved workers.

[2] Extremity doses are estimated to be approximately nine times higher than the whole body dose, but would be expected to stay within DOE's administrative limit of 2 rem/yr, or in the case at Pantex, 5 rem/yr (Low 1999).

Alternatives 2 through 12 involve immobilization of nonpit plutonium at Hanford (Alternative 2, 4, 8, 10, or 11) or SRS (Alternative 3, 5, 6, 7, 9, or 12). This material would be transported from its current location at various DOE sites to the chosen immobilization facility. If the immobilization facility uses a ceramic process, uranium oxide would be required. One of the United States Enrichment Corporation's gaseous diffusion plants would fill cylinders with depleted uranium hexafluoride, which would be transported to a commercial facility for conversion to uranium oxide. (For the purpose of this analysis, the gaseous diffusion plant in Portsmouth, Ohio, and the nuclear fuel fabrication facility in Wilmington, North Carolina, were chosen as representative sites for these activities.) The uranium oxide would be transported to the immobilization facility at Hanford or SRS. After the material is immobilized, it is assumed that the additional canisters of high level waste would be shipped to a potential geologic repository consistent with the assumptions made in the *Final Waste Management Programmatic Environmental Impact Statement for Managing Treatment, Storage, and Disposal of Radioactive and Hazardous Waste* (WM PEIS) (DOE 1997a). Figure L–2 shows the transportation requirements for the proposed immobilization disposition activities.

The production of MOX fuel (Alternatives 2 through 10) requires transporting plutonium dioxide from the pit conversion facility to the MOX facility at Hanford, INEEL, Pantex, or SRS. However, in every alternative except Alternatives 4 and 5, the pit conversion facility and MOX facility are collocated so there would not be any intersite transportation required for the plutonium dioxide as discussed above. In the case of Alternative 4, the pit conversion facility would be located at Pantex and the plutonium dioxide would be shipped to Hanford. Under Alternative 5, the pit conversion facility would also be at Pantex but the plutonium dioxide would be shipped to SRS. Uranium oxide needed to produce MOX fuel would be converted from uranium hexafluoride, originally from Portsmouth, at Wilmington, and then transported to the MOX facility. If MOX fuel rods are bundled with low-enriched uranium fuel rods, the uranium fuel rods may come from a separate fabrication facility. Transportation of the uranium fuel rods to the MOX facility is equivalent to transportation of uranium fuel to a commercial reactor site. This transportation activity is covered under the *Final Environmental Statement on the Transportation of Radioactive Material by Air and Other Modes* (NRC 1977). The MOX fuel would be transported to a domestic, commercial reactor for power production. For the purposes of this analysis, all MOX fuel was assumed to be transported to North Anna, the commercial reactor farthest from the MOX facility. Because the proposed reactor sites are in the same general area of the country, this approach closely models the risk of implementing each alternative. Figure L–3 shows the transportation requirements for the proposed MOX disposition activities.

Alternatives 2 through 10 include the production of MOX fuel. If this alternative is chosen by DOE, lead assembly fabrication and irradiation may precede the actual production of MOX fuel. Plutonium dioxide at LANL would be shipped to one of five DOE facilities (Argonne National Laboratory–West [ANL–W], Hanford, LLNL, LANL, or SRS). Low-enriched uranium (LEU) oxide would be produced from LEU hexafluoride, originally from Portsmouth, at Wilmington, and then transported to the lead assembly fabrication facility. From the fabrication facility, the MOX fuel lead assemblies would be transported overland to the McGuire reactor. After irradiation in the reactor, the MOX spent fuel lead assemblies would be transported to a DOE site (either ANL–W or Oak Ridge National Laboratory) for postirradiation examination. Figure L–4 shows the transportation requirements for the proposed lead assembly activities.

Table L–1 shows the container type, vehicle type, and number of shipments required for each material form. This table can be used along with Figures L–2 through L–4 to determine which shipments and how many shipments are required for each alternative. The container type and vehicle type are based on currently available containers, and current practices, regulations, and DOE Orders. If a MOX production alternative is selected, DOE would have to design and construct a container to transport MOX fuel to the commercial, domestic reactor. The estimated number of shipments is based on the best available information and could change slightly as material is prepared for transportation.

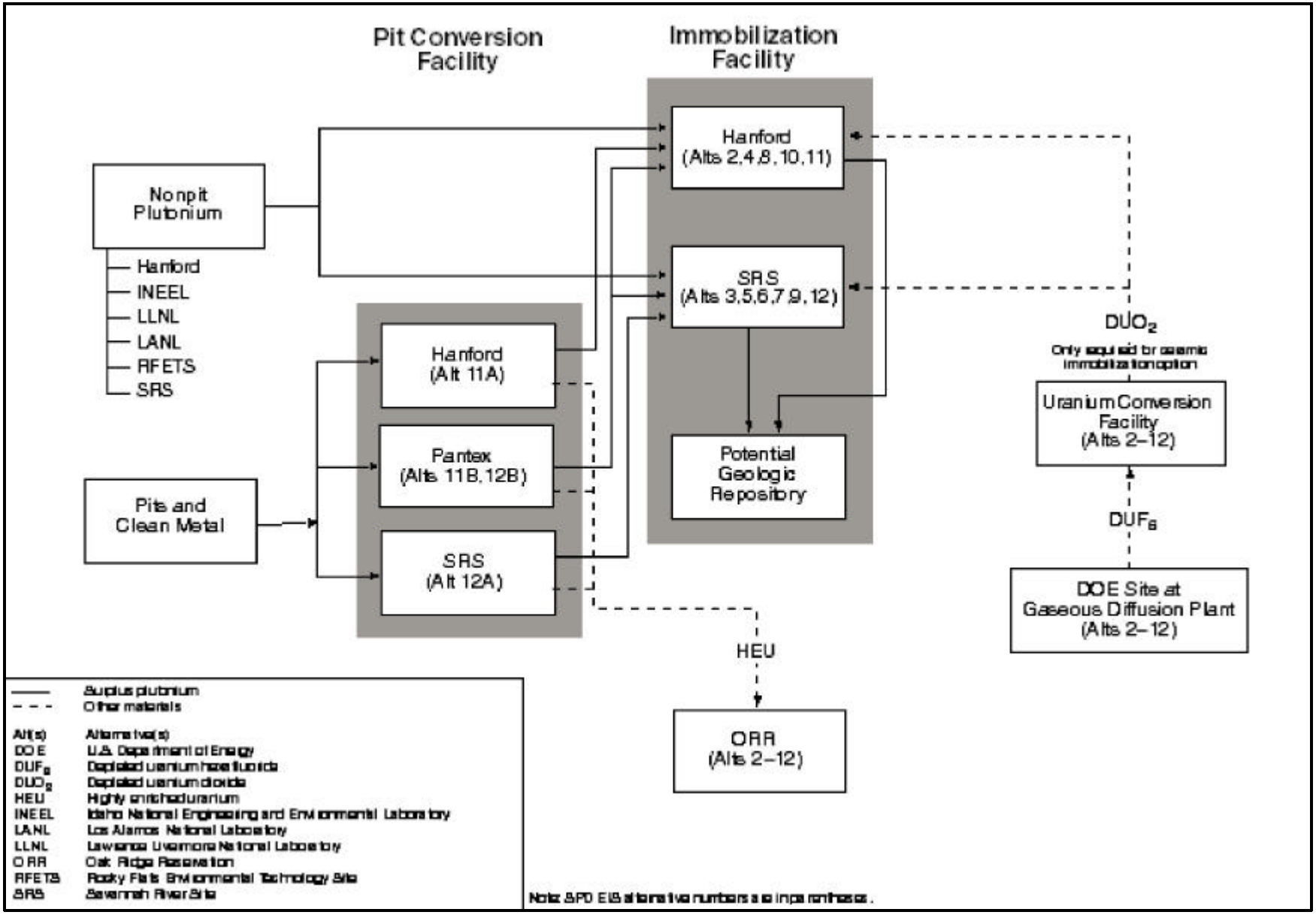

Figure L–2. Transportation Requirements for Plutonium Conversion and Immobilization

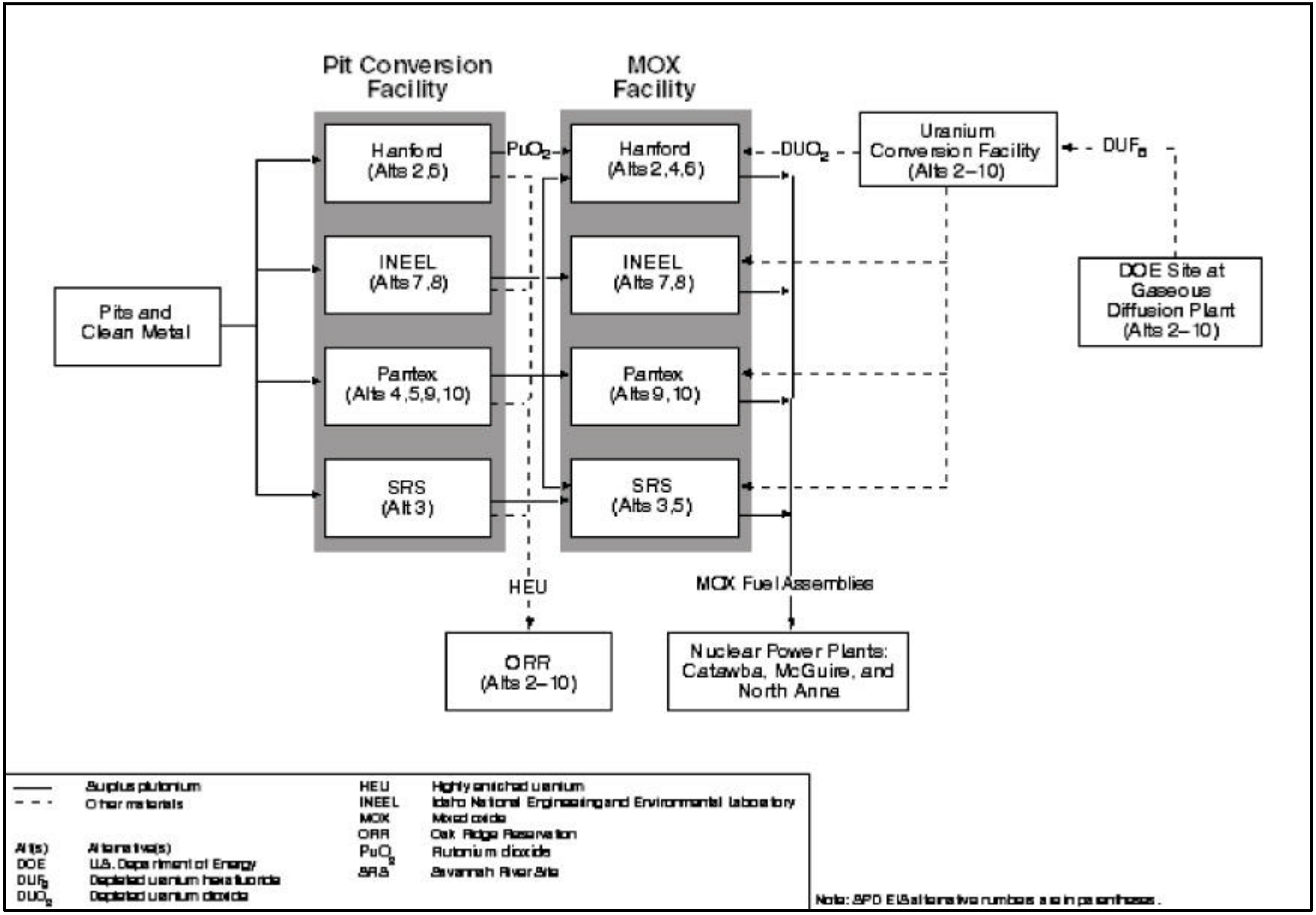

Figure L–3. Transportation Requirements for MOX Fuel Fabrication

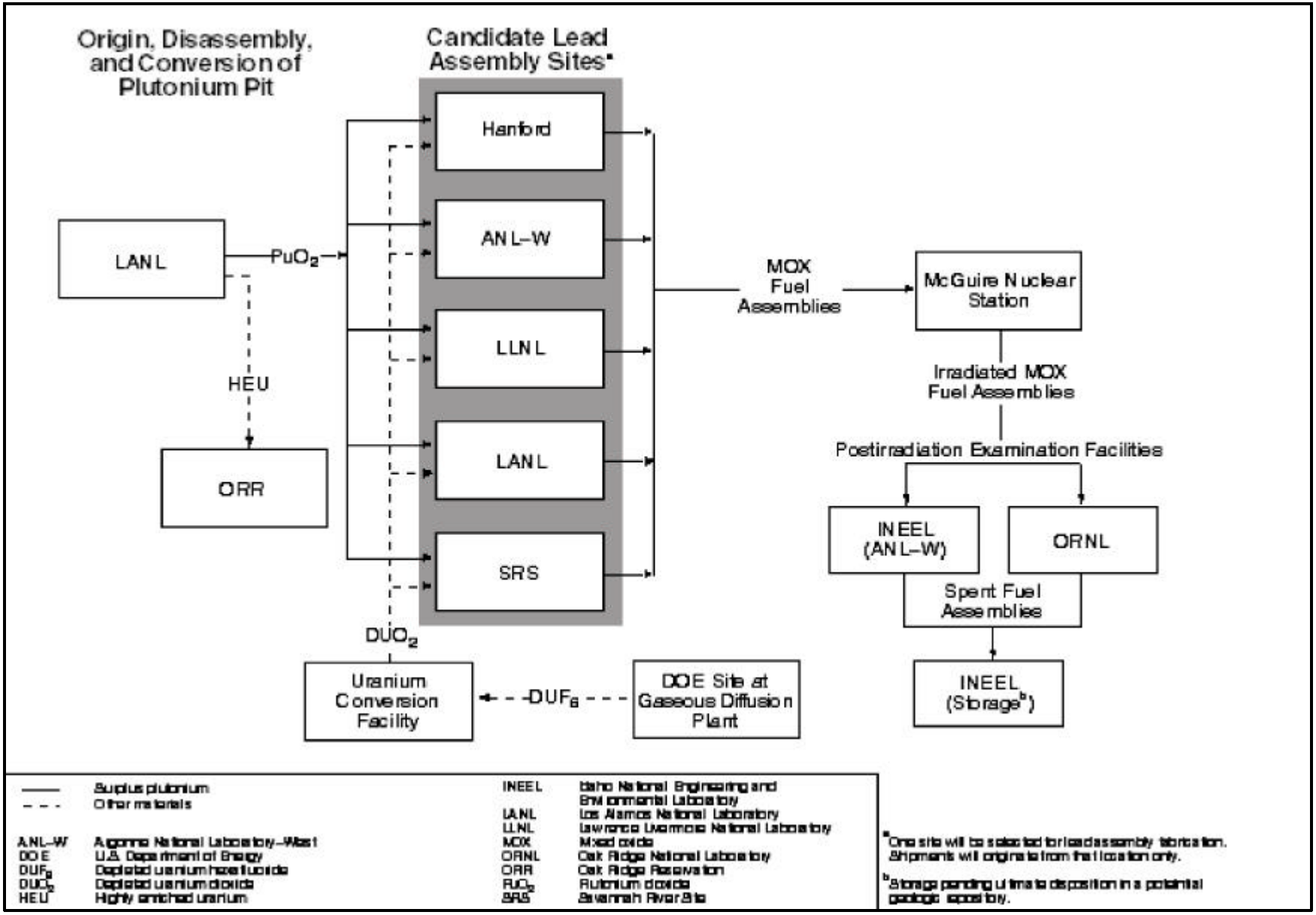

Figure L–4. Transportation Requirements for Lead Assembly Fabrication

Table L–1. Summary of Material Shipments

Origin	Destination	Material Form	Container	Vehicle	No. of Shipments
Surplus plutonium [a,b]					
Pantex	PDCF	Pits	To be designed	SST/SGT	530
Hanford	Immobilization	Oxide	9975	SST/SGT	104
		FFTF pins	M60	SST/SGT	13
		FFTF assemblies	RRSC	SST/SGT	14
ANL–W	Immobilization	ZPPR plates	9975	SST/SGT	116
		ZPPR pins	9975	SST/SGT	40
SRS	Immobilization	SRS material	9975	SST/SGT	48
LANL	Immobilization	Oxide	SAFEKEG	SST/SGT	7
		Metal	SAFEKEG	SST/SGT	4
LLNL	Immobilization	Various	9975	SST/SGT	8
RFETS	Immobilization	Oxide	9975	SST/SGT	104
Pit conversion facility [a,b]					
PDCF	Y–12	HEU	DT-22	SST/SGT	160
PDCF	LANL	Piece parts	UC-609	SST/SGT	20
PDCF	LANL	Piece parts	9968	SST/SGT	10
PDCF	Immobilization or MOX facility	Oxide	SAFEKEG	SST/SGT	254
Immobilization facility					
GDP	UO_2 facility	UF_6 [c]	30B cylinder	Commercial	2/2 [d]
UO_2 facility	Immobilization	UO_2 [c]	55-gal drum	Commercial	2/5 [d]
Immobilization	Potential geologic repository	Vitrified HLW [b]	TRUPACT	Commercial	145/395 [d]
MOX facility [e]					
GDP	UO_2 facility	UF_6 [c]	30B	Commercial	80
UO_2 facility	MOX facility	UO_2 [c]	55-gal drum	Commercial	60
MOX facility	Reactors	MOX fuel bundles [a,b]	To be designed	SST/SGT	830
Lead assembly fabrication facility [f]					
LANL	Lead assembly	Pu oxide	SAFEKEG	SST/SGT	12
GDP	UO_2 facility	UF_6	30B cylinder	Commercial	1
UO_2 facility	MOX facility	UO_2	55-gal drum	Commercial	2
MOX facility	Reactors	MOX fuel bundles	MO-1	SST/SGT	4
Reactor	Examination site	Irradiated fuel	Type -B	Commercial	8

[a] From Didlake 1998.
[b] From UC 1998a–h, 1999a–d.
[c] From White 1997.
[d] 17-ton cases/50-ton cases.
[e] Some equipment for the MOX facility may be manufactured in Europe and shipped to the United States. No nuclear or radiologically contaminated materials would be transported. Any such shipments would be made by commercial vessel, and no impacts other than those occurring from routine commercial shipping would be expected.
[f] From O'Connor et al. 1998a–e.

Key: ANL–W, Argonne National Laboratory–W; FFTF, Fast Flux Test Facility; GDP, Gaseous Diffusion Plant; HEU, highly enriched uranium; HLW, high-level waste; LANL, Los Alamos National Laboratory; LLNL, Lawrence Livermore National Laboratory; PDCF, pit disassembly and conversion facility; Pu, plutonium; RFETS, Rocky Flats Environmental Technology Site; SST/SGT, safe, secure trailer/SafeGuards Transport; UF_6, uranium hexafluoride; UO_2, uranium dioxide; ZPPR, Zero Power Physics Reactor.

L.5.2 Representative Routes and Populations

Representative overland truck routes were selected for the origin and destination points identified in Figures L–2, L–3, and L–4 are shown in Table L–2. The routes (which were determined for risk assessment purposes) were

selected consistent with current routing practices and all applicable routing regulations and guidelines. They do not necessarily represent the actual routes that would be used to transport plutonium and other hazardous materials in the future. Details about a planned shipment cannot be identified in advance, as explained in Appendix L.3.3.

Route characteristics that are important to the radiological risk assessment include the total shipment distance and the population distribution along the route. The specific route selected determines both the total potentially exposed population and the expected frequency of transportation-related accidents. Route characteristics are summarized in Table L–2. The population densities along each route are derived from 1990 U.S. Bureau of the Census data and projected forward to the year 2010 using State-specific projections. Rural, suburban, and urban areas are characterized according to the following breakdown: rural population densities range from 0 to 54 persons per square kilometer (0 to 139 person per square mile); the suburban range is from 55 to 1,284 persons per square kilometer (140 to 3,326 persons per square mile); and the urban includes all population densities greater than 1,284 persons per square kilometer (3,326 persons per square mile). The exposed population includes all persons living within 800 m (0.5 mi) of each side of the road.

L.5.3 Distance Traveled by Alternative

Table L–3 shows the number of shipments, the total mileage traveled by the trucks carrying nuclear materials, and the affected populations. The affected population is designed to show the number of people potentially exposed to nuclear material shipments. The measure is calculated by multiplying the number of shipments by the number of people living within 800 m (0.5 mi) of the route used to transport the material. The highest possible lead test assembly mileages and populations from Table L–3 are used in the alternative totals. The number of trips in Table L–3 comes from the SPD EIS data reports (UC 1998a–h, 1999a–d).

[Text deleted.]

L.5.4 Shipment External Dose Rates

The dose and corresponding risk to populations and maximally exposed individuals during incident-free transportation conditions are directly proportional to the assumed shipment external dose rate. The Federal regulations for maximum allowable dose rates for exclusive-use shipments were presented in Appendix L.3.1.

The actual shipment dose rate is a complex function of the composition and configuration of shielding and containment used in the cask, the geometry of the loaded shipments, and characteristics of the material shipped. DOE has years of experience handling the materials that would be required to be shipped under the alternatives assessed in the SPD EIS, and has regularly conducted radiation level measurements while handling these materials. The maximum predicted dose from individual packages, based on experience at DOE facilities, would yield a dose rate less than the Federal regulatory limit in every case. Spent nuclear fuel and nonpit plutonium were conservatively assumed to have dose rates equal to the regulatory limit of 10 mrem/hr at 2 m (6.6 ft) from the vehicle. This DOE experience was used in the preparation of the dose rates given in the data reports (UC 1998a–h, 1999a–d) and used in the analysis.

Table L–2. Potential Shipping Legs Evaluated in the SPD EIS

From	To	Distance (km)	Percentage in Zones			Population Density (person/km^2)			Affected Population
			Rural	Suburban	Urban	Rural	Suburban	Urban	
ANL–W	INEEL	34	100	0	0	2	0	0	84
ANL–W	Hanford	1,035	91.7	7.6	0.6	9	570	2,883	113,482
ANL–W	Pantex	2,395	90.1	8.3	1.6	6	561	2,963	380,038
ANL–W	SRS	3,756	82.8	15.4	1.8	9	453	2,787	767,529
Hanford	INEEL	967	91.6	7.9	0.6	8	559	2,898	107,214
Hanford	ORR	3,981	87.6	11.1	1.3	8	461	2,830	604,916
Hanford	Pantex	3,032	90.6	8.0	1.4	6	574	2,979	450,511
Hanford	Onsite	24	100	0	0	10	0	0	538
Hanford	Geologic repository[a]	1,907	87.8	10.3	1.9	4	485	2,098	397,534
Hanford	LANL	2,511	90.2	8.6	1.2	6	569	2,952	361,442
INEEL	SRS	3,719	82.7	15.4	1.8	9	450	2,788	757,940
INEEL	ORR	3,312	86.7	11.9	1.4	8	437	2,778	518,875
INEEL	LANL	1,841	89.6	9.1	1.4	6	553	2,962	286,387
LANL	Pantex	647	90.7	6.8	2.5	6	676	3,061	132,446
LANL	LLNL	1,218	88.8	7.8	3.4	5	634	3,634	346,679
LANL	INEEL	1,841	89.6	9.1	1.4	6	553	2,962	286,387
LANL	Hanford	2,511	90.2	8.6	1.2	6	569	2,952	361,442
LANL	SRS	2,787	80.8	16.9	2.4	12	455	2,786	684,441
LANL	ORR	2,390	85.8	12.3	1.9	10	435	2,764	439,696
LANL	ANL–W	1,873	89.1	9.5	1.4	4.5	386	2,085	296,222
LLNL	Hanford	1,429	76.0	20.5	3.5	12	487	2,868	478,115
LLNL	INEEL	1,566	85.7	10.3	4.0	6	713	3,546	552,834
LLNL	Pantex	2,327	89.8	6.7	3.5	5	674	3,525	643,591
LLNL	SRS	4,416	80.6	16.4	3.0	10	482	3,165	1,284,987
LLNL	NTS	1,143	85.8	8.6	5.6	5	716	3,771	506,575
Pantex	ORR	1,762	84.4	14.0	1.6	12	392	2,657	302,418
Pantex	SRS	2,169	78.1	19.6	2.3	14	426	2,706	543,092
Pantex	INEEL	2,363	90.2	8.2	1.6	6	561	2,988	373,420
Pantex	WIPP	713	93.1	6.0	0.8	4	697	2,631	75,392
Pantex	NTS	1,997	94.0	4.8	1.2	4	634	3,086	228,159
Pantex	LANL	647	90.7	6.8	2.5	6	676	3,061	132,446
Portsmouth, OH	Fuel fabrication[b]	1,014	63.5	34.6	1.7	20	380	2,446	301,445
RFETS	INEEL	1,178	91.4	7.4	1.2	6	505	3,329	156,394
RFETS	Pantex	1,255	87.2	10.0	2.9	5	634	3,143	319,338
RFETS	Hanford	1,848	91.6	7.4	1.0	6	547	3,228	232,380
RFETS	SRS	2,609	78.1	19.3	2.5	11	439	2,741	674,965
SRS	ORR	575	68.7	30.5	0.8	18	374	2,306	132,959
SRS	Hanford	4,389	84.2	14.2	1.6	9	467	2,823	835,727
SRS	Onsite	6	100	0	0	10	0	0	134
SRS	Geologic repository[a]	3,936	83.2	19.9	1.9	9	510	3,069	893,080
SRS	LANL	2,787	80.8	16.9	2.4	12	455	2,786	684,441
Fuel fabrication[b]	SRS	581	72.8	26.8	0.3	23	301	2,202	97,034
Fuel fabrication[b]	Pantex	2,577	76.2	22.4	1.4	14	392	2,690	651,769
Fuel fabrication[b]	Hanford	4,796	82.6	16.1	1.2	10	435	2,806	856,223

Table L–2. Potential Shipping Legs Evaluated in the SPD EIS (Continued)

From	To	Distance (km)	Percentage in Zones			Population Density (person/km^2)			Affected Population
			Rural	Suburban	Urban	Rural	Suburban	Urban	
Fuel fabrication[b]	ANL–W	4,165	81.0	17.7	1.3	10	418	2,769	787,474
Fuel fabrication[b]	LLNL	4,880	82.5	15.1	2.4	10	457	3,192	1,199,169
Fuel fabrication[b]	LANL	3,201	78.0	19.8	1.6	13	413	2,766	696,023
Generic 4,000 km		4,000	84.0	15.0	1.0	6	719	3,861	969,600
Generic 5,000 km		5,000	84.0	15.0	1.0	6	719	3,861	1,212,000
Hanford	Catawba	4,498	84.5	14.1	1.3	9	447	2,776	765,850
INEEL/ANL	Catawba	3,793	83.0	15.5	1.5	9	429	2,737	697,959
SRS	Catawba	251	69.0	29.8	1.2	17	418	2,373	66,154
LANL	Catawba	2,844	81.1	17.0	1.8	11	428	2,722	595,856
LLNL	Catawba	4,539	84.3	13.1	2.6	9	477	3,167	1,105,526
Pantex	Catawba	2,243	78.6	19.7	1.7	13	397	2,626	477,319
Catawba	ORR	497	58.3	39.8	2.0	20	405	2,546	177,922
Hanford	McGuire	4,458	84.8	13.9	1.2	9	428	2,802	716,024
INEEL/ANL–W	McGuire	3,753	83.4	15.3	1.3	9	409	2,767	636,712
SRS	McGuire	296	66.4	31.6	2.1	15	441	2,438	94,828
LANL	McGuire	2,821	81.5	16.9	1.7	11	401	2,753	559,307
LLNL	McGuire	4,500	84.6	12.9	2.5	9	458	3,207	1,055,765
Pantex	McGuire	2,203	79.3	19.3	1.4	13	370	2,661	419,295
McGuire	ORR	457	59.5	39.9	0.5	21	343	2,504	118,268
Hanford	N. Anna	4,575	86.1	12.4	1.4	9	449	2,717	744,228
INEEL/ANL–W	N. Anna	3,870	85.0	13.4	1.6	10	429	2,666	671,048
SRS	N. Anna	837	72.7	26.8	0.5	21	306	2,167	145,069
LANL	N. Anna	3,117	83.6	14.7	1.7	13	397	2,711	574,877
LLNL	N. Anna	4,797	84.7	12.7	2.7	9	492	2,886	1,134,405
Pantex	N. Anna	2,499	82.0	16.6	1.4	14	364	2,619	435,744
N. Anna	ORR	753	76.3	22.7	1.0	22	317	2,503	137,224

[a] Potential geologic repository assumed to be located at Yucca Mountain, Nevada, for the purposes of analysis.
[b] Assumed to be located at Wilmington, North Carolina, for the purposes of analysis.

Key: ANL–W, Argonne National Laboratory–W; LANL, Los Alamos National Laboratory; LLNL, Lawrence Livermore National Laboratory; NTS, Nevada Test Site; ORR, Oak Ridge Reservation; RFETS, Rocky Flats Environmental Technology Site; WIPP, Waste Isolation Pilot Plant.

Table L–3. Summary of SPD EIS Transportation Requirements

Alternative	Number of Trips	Cumulative Distance (km)	Affected Population (millions)
2	2,447	7.5 M	5.4
3	2,530	4.3 M	7.0
4	2,171	6.3 M	4.9
5	2,254	3.8 M	6.7
6	2,530	8.7 M	8.5
7	2,530	7.6 M	8.1
8	2,447	6.4 M	5.3
9	2,000	4.8 M	6.4
10	1,917	3.6 M	4.2
11A	2,153	3.7 M	4.7
11B	1,877	2.5 M	4.1
12A	2,236	4.4 M	6.8
12B	1,960	3.9 M	6.4
Lead assembly			
ANL–W	27	77 K	2.5
Hanford	27	89 K	2.7
LLNL	27	73 K	3.4
LANL	15	49 K	2.1
SRS	27	67 K	1.7

Key: ANL–W, Argonne National Laboratory–W; K, thousands; LANL, Los Alamos National Laboratory; LLNL, Lawrence Livermore National Laboratory; M, million.

L.5.5 Health Risk Conversion Factors

The health risk conversion factors used to estimate expected cancer fatalities were taken from the *1990 Recommendations of the International Commission on Radiological Protection* (ICRP 1991): 0.0005 and 0.0004 fatal cancer cases per person-rem for members of the public and workers, respectively. Cancer fatalities occur during the lifetimes of the exposed populations and, thus, are called LCFs.

L.5.6 Accident Involvement Rates

For the calculation of accident risks, vehicle accident and fatality rates are taken from data provided in other reports (Saricks and Kvitek 1994). Accident rates are generically defined as the number of accident involvements (or fatalities) in a given year per unit of travel in that same year. Therefore, the rate is a fractional value, with the accident-involvement count as the numerator of the fraction and vehicular activity (total travel distance) as its denominator. Accident rates are generally determined for a multiyear period. For assessment purposes, the total number of expected accidents or fatalities is calculated by multiplying the total shipment distance for a specific case by the appropriate accident or fatality rate.

For truck transportation, the rates presented are specifically for heavy combination trucks involved in interstate commerce (Saricks and Kvitek 1994). Heavy combination trucks are rigs composed of a separable tractor unit containing the engine and one to three freight trailers connected to each other. Heavy combination trucks are typically used for radioactive waste shipments. The truck accident rates are computed for each State based on statistics compiled by the DOT Office of Motor Carriers for 1986 to 1988. Saricks and Kvitek present accident involvement and fatality counts; estimated kilometers of travel by State; and the corresponding average accident involvement, fatality, and injury rates for the 3 years investigated. Fatalities are deaths (including crew members)

attributable to the accident or that occurred at any time within 30 days thereafter. SST/SGT accident rates are based on operational experience (Claus and Shyr 1999) and influence factors (Phillips et al. 1994).

L.5.7 Container Accident Response Characteristics and Release Fractions

The transportation accident model assigns accident probabilities to a set of accident categories. Eight accident-severity categories defined in the NRC's *Final Environmental Statement on the Transportation of Radioactive Material by Air and Other Modes*, NUREG-0170 (NRC 1977), were used. The least severe categories (Categories I and II) represent low magnitudes of crush force, accident-impact velocity, fire duration, and puncture-impact speed. The most severe category (Category VIII) represents a large crush force, high accident-impact velocity, long fire duration, and a high puncture-impact speed. The fraction of material released and material aerosolized, and the fraction of that material that is respirable (particles smaller than 10 microns), was assigned based on the accident categories and container types. Because all plutonium shipments will use the previously described Type B containers and the SST/SGT system, even severe accidents release, at the most, a portion of the material being transported. The risks associated with other materials are significantly lower.

L.6 RISK ANALYSIS RESULTS

L.6.1 Per-Shipment Risk Factors

Per-shipment risk factors have been calculated for the collective populations of exposed persons and the crew for all anticipated routes and shipment configurations. The radiological risks are presented in doses per shipment for each unique route, material, and container combination. Doses are calculated for the crew, off-link public (i.e., people living along the route), on-link public (i.e., pedestrians and drivers along the route), and public at rest and fueling stops (i.e., stopped cars, buses, and trucks, workers, and other bystanders). The accident risk factors are called "dose risk" because the values incorporate the spectrum of accident severity probabilities and associated consequences. Separate risk factors are provided for fatalities resulting from hydrocarbon emissions (known to contain carcinogens) and transportation accidents (fatalities resulting from impact).

L.6.2 Evaluation of Shipment Risks

Tables L–4 and L–5 show the human health risks and maximum human health risks, respectively, of transporting materials for the lead assembly alternatives. As shown, the risks include the risk of transporting uranium dioxide, uranium hexafluoride, plutonium dioxide, fuel assemblies, and spent fuel. Table L–6 shows the results of similar calculations that give the risks for each alternative. The risk estimates in Table L–6 include the maximum risk for the lead assembly transportation (Alternatives 2 through 10), plutonium pit shipments, pit material shipments (HEU and nonplutonium bearing pit parts), uranium hexafluoride, uranium dioxide, fuel assemblies, and nonpit plutonium. The risks are calculated by multiplying the per-shipment factors by the number of shipments and, in the case of the radiological doses, by the health risk conversion factors.

Table L–4. Human Health Risks of Transport to Lead Assembly Facilities

	DUO_2 and LEU Fuel Assemblies From FFF					PuO_2 From LANL				
	Routine Transport Impacts					Routine Transport Impacts				
	Radiological			Accident Risks		Radiological			Accident Risks	
Site	Crew	Public	Nonrad[a]	Rad	Nonrad	Crew	Public	Nonrad[a]	Rad	Nonrad
LANL	5.6E-6	4.5E-5	2.0E-5	3.8E-4	2.5E-4	–	–	–	–	–
ANL–W	7.3E-6	5.8E-5	2.2E-5	1.6E-4	3.2E-4	2.1E-6	2.2E-6	8.2E-5	2.3E-4	1.6E-4
SRS	9.8E-7	7.9E-6	1.3E-6	1.2E-5	4.3E-5	3.2E-6	4.2E-6	2.1E-4	5.3E-4	2.3E-4
Hanford	8.4E-6	6.7E-5	2.3E-5	1.7E-4	3.7E-4	2.8E-6	2.9E-6	9.4E-5	2.8E-4	2.1E-4
LLNL	8.5E-6	6.8E-5	4.7E-5	3.4E-4	3.8E-4	1.4E-6	1.4E-6	1.3E-4	2.9E-4	1.0E-4

[a] Toxic emissions.

Key: ANL–W, Argonne National Laboratory–West; DUO_2, depleted uranium dioxide; FFF, Uranium Fuel Fabrication Facility; LANL, Los Alamos National Laboratory; LEU, low-enriched uranium; LLNL, Lawrence Livermore National Laboratory; Rad, radiological; Nonrad, nonradiological; PuO_2, plutonium dioxide; UO_2, uranium dioxide.

Note: All risks are expressed in latent cancer fatalities during the implementation of the proposed action, except for the Nonrad Accident Risks column, which is the number of fatalities.

Table L–5. Maximum Human Health Risks of Transport to Lead Assembly Facilities

	Routine Transport Impacts			Accident Risks	
	Radiological				
Shipment	Crew	Public	Nonradiological[a]	Radiological	Nonradiological
Depleted UO_2 and LEU fuel assemblies from FFF and PuO_2 from LANL	1.1E-5	7.0E-5	2.1E-4	6.3E-4	5.8E-4
Depleted UF_6 from gaseous diffusion plant to FFF	2.5E-8	2.0E-7	3.4E-6	5.2E-5	4.0E-5
Lead assemblies to reactor site	3.7E-7	2.2E-7	1.2E-4	2.1E-6	1.3E-4
Spent fuel to postirradiation examination site	5.5E-4	4.8E-3	7.8E-5	2.3E-3	1.2E-3

[a] Toxic emissions.

Key: FFF, Uranium Fuel Fabrication Facility; LANL, Los Alamos National Laboratory; LEU, low-enriched uranium; PuO_2, plutonium dioxide; UF_6, uranium hexafluoride; UO_2, uranium dioxide.

Note: All risks are expressed in latent cancer fatalities during the implementation of the proposed action, except for the Nonradiological Accident Risks column, which is the number of fatalities.

L.6.3 Maximally Exposed Individuals

The risks to maximally exposed individuals under incident-free transportation conditions were estimated for hypothetical exposure scenarios. The estimated dose to inspectors and the public is presented in Table L–7 on a per-event basis (person-rem per event). Note that the potential exists for individual exposures if multiple exposure events occur. For instance, the dose to a person stuck in traffic next to a shipment for 30 minutes is calculated to be 11 mrem. (This conservatively assumes the person in a car is 1.2 m [4 ft] from the edge of the truck.) If the exposure duration was longer, the dose would rise proportionally. In addition, a person working at a truck service station could receive a significant dose if trucks were to use the same stops repeatedly. The dose to a person fueling a truck could be as much as 1 mrem. Administrative controls could be instituted to control the location and duration of truck stops if multiple exposures were to occur routinely. However, it is DOE's normal practice to have SST/SGT guard force members (trained, monitored radiation workers) perform fueling and routine on-road maintenance checks (i.e., check oil or windshield wiper fluid).

Table L–6. Total Risks for All SPD EIS Alternatives

Alter-native	Pit Conversion	MOX	Immobilization	Routine Transport Impacts: Radiological: Crew	Routine Transport Impacts: Radiological: Public	Routine Transport Impacts: Nonradiological: Emission	Routine Transport Impacts: Nonradiological: Traffic	Accident Risks: Radiological: Accident
2	Hanford	Hanford	Hanford	0.012	0.020	0.025	0.074	0.004
3	SRS	SRS	SRS	0.024	0.034	0.019	0.053	0.004
4	Pantex	Hanford	Hanford	0.012	0.020	0.021	0.065	0.004
5	Pantex	SRS	SRS	0.024	0.033	0.016	0.050	0.004
6	Hanford	Hanford	SRS	0.024	0.035	0.033	0.091	0.004
7	INEEL	INEEL	SRS	0.024	0.035	0.032	0.083	0.004
8	INEEL	INEEL	Hanford	0.012	0.020	0.024	0.065	0.003
9	Pantex	Pantex	SRS	0.024	0.034	0.019	0.052	0.004
10	Pantex	Pantex	Hanford	0.012	0.019	0.012	0.043	0.003
11A	Hanford	NA	Hanford	0.027	0.036	0.011	0.054	0.0003
11B	Pantex	NA	Hanford	0.027	0.036	0.007	0.045	0.0007
12A	SRS	NA	SRS	0.057	0.074	0.021	0.081	0.0006
12B	Pantex	NA	SRS	0.057	0.073	0.018	0.078	0.0012

Key: NA, not applicable.
Note: All risks are expressed in latent cancer fatalities during the implementation of the proposed action, except for the Nonradiological Accident Risks column, which is the number of fatalities.

Table L–7. Estimated Dose to Maximally Exposed Individuals During Incident-Free Transportation Conditions[a,b]

Receptor	Dose to Maximally Exposed Individual
Workers	
Crew member	0.1 rem/yr[c]
Inspector	0.0029 rem/event
Public	
Resident	4.0×10^{-7} rem/event
Person in traffic construction	0.011 rem/event
Person at service station	0.001 rem/event

[a] The exposure scenario assumptions are described in Appendix L.6.3.
[b] Doses are calculated assuming that the shipment external dose rate is equal to the maximum expected dose 10 mrem/hr at 2 m (6.6 ft) from the package.
[c] Dose to truck drivers could exceed the legal limit of 100 mrem/yr in the absence of administrative controls.

The cumulative dose to a resident was calculated assuming all shipments passed his or her home. The cumulative doses assume that the resident is present for every shipment and is unshielded at a distance of 30 m (98 ft) from the route. Therefore, the cumulative dose is only a function of the number of shipments passing a particular point and is independent of the actual route being considered. The maximum dose to this resident, would be about 1 mrem. The annual individual dose can be estimated by assuming that shipments would occur uniformly over a 15-year time period.

The accident consequence assessment is intended to provide an estimate of the maximum potential impacts posed by the most severe potential transportation accidents involving a shipment. The accident consequence results are presented in Table L–8 for the maximum severity accidents involving plutonium dioxide shipments,

Table L–8. Estimated Dose to the Population and to Maximally Exposed Individuals During the Most Severe Accident Conditions (Plutonium Dioxide)[a, b]

	Neutral Conditions[c]				Stable Conditions[f]			
	Population[d]		Maximally Exposed Individual[e]		Population[d]		Maximally Exposed Individual[e]	
Mode and Accident Location	Dose (person-rem)	Consequences (Cancer Fatalities)	Dose (rem)	Consequences (Probability of Cancer Fatality)	Dose (person-rem)	Consequences (Cancer Fatalities)	Dose (rem)	Consequences (Probability of Cancer Fatality)
Truck								
Urban	228,760	114	684	0.68	40,420	20.2	23.2	0.023
Suburban	49,880	25	684	0.68	8,815	4.4	23.2	0.023
Rural	624	0.31	684	0.68	581	0.29	23.2	0.023

[a] The most severe accidents correspond to the NUREG-0170 accident severity Category VIII (NRC 1977).

[b] Buoyant plume rise resulting from fire for a severe accident was included in the exposure model.

[c] Neutral weather conditions result in moderate dispersion and dilution of the release plume. Neutral conditions were taken to be Pasquill stability Class D with a wind speed of 4 m/sec (9 mph). Neutral conditions occur approximately 50 percent of the time in the United States.

[d] Populations extend at a uniform density to a radius of 80 km (50 mi) from the accident site. Population exposure pathways include acute inhalation, acute cloudshine, groundshine, resuspended inhalation, resuspended cloudshine, and ingestion of food, including initially contaminated food (RISKIND assumes that all food is grown in rural areas) (Yuan et al. 1995). It is assumed that decontamination or mitigative actions are taken.

[e] The maximally exposed individual is assumed to be at the location of maximum exposure. The locations of maximum exposure would be 100 m (330 ft) and 500 m (1,650 ft) from the accident site under neutral and stable atmospheric conditions, respectively. Individual exposure pathways include acute inhalation, acute cloudshine, and groundshine during passage of the plume. No ingested dose is considered. Note that the maximally exposed individual receives more dose than the population in a rural location. This analytic phenomena is caused by probabilistic calculations. It is very unlikely that an individual will be nearby in a rural population zone.

[f] Stable weather conditions result in minimal dispersion and dilution of the release plume and are thus unfavorable. Stable conditions were taken to be Pasquill stability Class F with a wind speed of 1 m/sec (2.2 mph). Stable conditions occur approximately one-third of the time in the United States.

and Table L–9 for maximum severity accidents involving plutonium pits. Table L–8 applies to alternatives in which the pit conversion facility is located at Pantex, and large amounts of plutonium dioxides are shipped to a MOX or conversion facility. Table L–9 applies to alternatives in which plutonium pits and metals are shipped to a pit conversion facility at a site other than Pantex. In either table, the accident frequency in rural locations is about 1×10^{-7}per year (once in 10 million years). The frequency of accidents in urban and suburban zones was evaluated. Accidents are much less likely to occur in urban and suburban zones because the total distance traveled is much lower than in rural zones. The impacts represent the most severe accidents hypothesized.

The hypothetical accidents described in Tables L–8 and L–9 involve either a long-term fire or tremendous impact or crushing forces. In the case of crushing forces, a fire would have to be burning in order to spread the plutonium as modeled. These accidents are assumed to cause a ground-level release of 10 percent of the radioactive material in the truck. These accidents are more likely on rural interstates where speeds are higher and where the vehicles spend most of their travel time. NUREG-0170 (NRC 1977) describes the analytic approach in more detail.

The population doses are for a uniform population density within an 80-km (50-mi) radius (Neuhauser and Kanipe 1995). The location of the maximally exposed individual is determined based on atmospheric conditions

at the time of the accident and the buoyant characteristics of the released plume. The locations of maximum exposure would be 100 m (330 ft) and 500 m (1,650 ft) from the accident site for neutral (average)

Table L–9. Estimated Dose to the Population and to Maximally Exposed Individuals During the Most Severe Accident Conditions (Plutonium Pits)[a, b]

	Neutral Conditions [c]				Stable Conditions[f]			
	Population[d]		Maximally Exposed Individual[e]		Population[d]		Maximally Exposed Individual[e]	
Mode and Accident Location	Dose (person-rem)	Consequences (Cancer Fatalities)	Dose (rem)	Consequences (Probability of Cancer Fatality)	Dose (person-rem)	Consequences (Cancer Fatalities)	Dose (rem)	Consequences (Probability of Cancer Fatality)
Truck								
Urban	31,920	16	96	0.096	5,640	2.8	3.3	0.0016
Suburban	6,960	3.5	96	0.096	1,230	0.62	3.3	0.0016
Rural	87	0.044	96	0.096	81	0.041	3.3	0.0016

[a] The most severe accidents correspond to the NUREG-0170 accident severity Category VIII (NRC 1977).

[b] Buoyant plume rise resulting from fire for a severe accident was included in the exposure model.

[c] Neutral weather conditions result in moderate dispersion and dilution of the release plume. Neutral conditions were taken to be Pasquill stability Class D with a wind speed of 4 m/sec (9 mph). Neutral conditions occur approximately 50 percent of the time in the United States.

[d] Populations extend at a uniform density to a radius of 80 km (50 mi) from the accident site. Population exposure pathways include acute inhalation, acute cloudshine, groundshine, resuspended inhalation, resuspended cloudshine, and ingestion of food, including initially contaminated food (RISKIND assumes that all food is grown in rural areas) (Yuan et al. 1995). It is assumed that decontamination or mitigative actions are taken.

[e] The maximally exposed individual is assumed to be at the location of maximum exposure. The locations of maximum exposure would be 100 m (330 ft) and 500 m (1,650 ft) from the accident site under neutral and stable atmospheric conditions, respectively. Individual exposure pathways include acute inhalation, acute cloudshine, and groundshine during passage of the plume. No ingested dose is considered. Note that the maximally exposed individual receives more dose than the population in a rural location. This analytic phenomena is caused by probabilistic calculations. It is very unlikely that an individual will be nearby in a rural population zone.

[f] Stable weather conditions result in minimal dispersion and dilution of the release plume and are thus unfavorable. Stable conditions were taken to be Pasquill stability Class F with a wind speed of 1 m/sec (2.2 mph). Stable conditions occur approximately one-third of the time in the United States.

and stable conditions, respectively. The dose to the maximally exposed individual is independent of the location of the accident. No acute or early fatalities would be expected from radiological causes.

L.6.4 Waste Transportation

Under all of the alternatives being considered in the SPD EIS, some transportation would be required to support routine shipments of wastes from the proposed surplus plutonium disposition facilities to treatment, storage, or disposal facilities located on the sites. All DOE sites have plans and procedures for handling and transporting waste. This transportation would be handled in the same manner as other site waste shipments and would not represent a large increase in the amount of wastes generated at these sites. The shipments would not represent any additional risks beyond the ordinary waste shipments at these sites, as analyzed in the WM PEIS (DOE 1997a).

However, in four specific cases, waste would be generated that is not covered in the WM PEIS (DOE 1997a): (1) transuranic (TRU) waste generated at Pantex from the pit conversion facility; (2) low-level waste (LLW) generated at Pantex from the pit conversion facility; (3) LLW generated at Pantex from the MOX facility, and (4) LLW generated at LLNL during lead assembly fabrication.

TRU waste generated at Pantex was not covered by the WM PEIS Record of Decision (ROD) because there was no TRU waste at Pantex at the time the ROD was issued, and none was anticipated to be generated by ongoing

site operations. Location of the pit conversion and MOX facilities at Pantex would result in the generation of TRU waste as described in Section 4.17.2.2 of the SPD EIS. Shipment of TRU waste to WIPP was analyzed using the methodology and parameters found in Appendix E of the Waste Isolation Pilot Plant *Disposal Phase Final Supplemental Environmental Impact Statement* (DOE 1997b). In order to support the transportation of TRU waste from Pantex to WIPP, 76 additional shipments were analyzed in the SPD EIS.

A fairly large increase in the amount of LLW (i.e., 25 percent of the site's current storage capacity) would be expected if the pit conversion facility were located at Pantex. Currently, this type of waste is shipped to the Nevada Test Site (NTS) for disposal. In order to support the transportation of pit conversion facility LLW from Pantex to NTS, 21 additional shipments were analyzed in the SPD EIS. The impacts were calculated from LLW transportation impacts presented in the WM PEIS (DOE 1997a).

An additional increase in the amount of LLW (i.e., 14 percent, for a total of 39 percent of the site's current storage capacity) would be expected if the pit conversion and MOX facilities are located at Pantex. Currently, this type of waste is shipped to NTS for disposal. In order to support the transportation of MOX LLW from Pantex to NTS, 38 additional shipments have been analyzed in the SPD EIS. The impacts were calculated from LLW transportation impacts presented in the WM PEIS (DOE 1997a).

Further, an increase in the LLW at LLNL would be expected if the lead assembly were done at LLNL. Currently, this type of waste is shipped to NTS for disposal. In order to support transportation of lead assembly LLW from LLNL to NTS, 44 additional shipments were analyzed in the SPD EIS. The impacts were calculated from LLW transportation impacts presented in the WM PEIS (DOE 1997a). Table L–10 shows the impacts of transporting LLW and TRU waste. The radiological risks to the public are larger for TRU than for LLW because of the larger amount of radioactive material in TRU. The dose to the crew are about the same, because the truck carrying TRU would require some shielding or spacing to ensure that the dose rate to the truck crew is less than 2 mrem/hr.

Table L–10. Impacts of Transporting LLW and Transuranic Waste

					Routine Transport Impacts				Accidental Risks
					Radiological		Nonradiological		Radiological
Waste Type	Origin	Destination	Trips	Kilometers Traveled	Crew	Public	Emission	Traffic	
LLW	Pantex, pit conversion facility	NTS	38	76,000	0.0011	0.0015	0.00018	0.0029	5.8×10^{-7}
LLW	Pantex, MOX	NTS	21	42,000	0.0006	0.0008	0.00010	0.0016	3.2×10^{-7}
LLW	LLNL	NTS	44	50,000	0.0007	0.0010	0.00056	0.0020	3.8×10^{-7}
TRU	Pantex, pit conversion facility	WIPP	76	54,000	0.0008	0.0025	0.00013	0.0015	1.1×10^{-6}

Key: LLNL, Lawrence Livermore National Laboratory; LLW, low-level waste; NTS, Nevada Test Site; TRU, transuranic; WIPP, Waste Isolation Pilot Plant.

Note: All risks are expressed in latent cancer fatalities during the implementation of the proposed actions except for the Nonradiological Accidental Traffic column, which is the number of fatalities.

L.6.5 Consequences of Sabotage or Terrorist Attack During Transportation

This section provides an evaluation of impacts that could potentially result from a malicious act on a shipment of hazardous or radioactive material during transportation. In no instance, even in severe cases such as those discussed below, could a nuclear explosion or permanent contamination of the environment leading to condemnation of land occur. Because of the Transportation Safeguards System described in Appendix L.3.2,

DOE considers sabotage or terrorist attack on an SST/SGT to be unlikely enough such that no further risk analysis is required.

DOE analyzed the nonproliferation aspects (DOE 1997c) of the transportation associated with the alternatives in the SPD EIS. In this study, DOE realized that all plutonium disposition alternatives under consideration would involve processing and transport of plutonium, which will involve more risk of theft in the short term than if the material had remained in heavily guarded storage, in return for the long-term benefit of converting the material to more proliferation-resistant forms. DOE intends to use the same SST/SGTs for these shipments that are used for shipment of intact nuclear weapons, with similar security forces and other measures. The level of assurance against possible attack during transportation can be increased to essentially any desired level by applying more resources such as money, security forces, or technology. DOE concluded that transport of plutonium is the point in the disposition process when the material is most vulnerable to overt, armed attacks designed to steal plutonium. With sufficient resources devoted to security, high levels of protection against such overt attacks can be provided. International, and particularly overseas, shipments would involve greater transportation concerns than domestic shipments (DOE 1997c).

The *Final Environmental Impact Statement on a Proposed Nuclear Weapons Nonproliferation Policy Concerning Foreign Research Reactor Spent Nuclear Fuel* (DOE 1996d) analyzed the spectrum of attacks on spent nuclear fuel casks. They fall into three categories or scenarios: (1) exploding a bomb near a shipping cask, (2) attacking a cask with a shaped charge or an armor-piercing weapon (i.e., an antitank weapon), and (3) hijacking (stealing) a shipping cask. None of the scenarios considered would lead to a criticality accident. DOE determined that, due to the security measures that would be in place for any spent nuclear fuel shipments, such attacks would be unlikely to occur. At a minimum, the extent or effects of any such attacks would be mitigated by the security measures. Additionally, the SPD EIS considered a comparatively few shipments (if the lead assembly program is implemented) of spent nuclear fuel. Other materials, including uranium hexaflouride, uranium dioxide, TRU waste, and LLW, are commonly shipped and do not represent particularly attractive targets for sabotage or terrorist attacks.

L.7 CUMULATIVE IMPACTS OF TRANSPORTATION

L.7.1 Radiological Impacts

The cumulative impacts of the transportation of radioactive material consist of impacts from (a) historical shipments of radioactive waste and spent nuclear fuel, (b) reasonably foreseeable actions that include transportation of radioactive material, (c) general radioactive materials transportation that is not related to a particular action, and (d) the alternatives evaluated in the SPD EIS. The assessment of cumulative transportation impacts concentrates on the cumulative impacts of offsite transportation because offsite transportation yields potential radiation doses to a greater portion of the general population than does onsite transportation. The collective dose to the general population and workers was the measure used to quantify cumulative transportation impacts. This measure of impact was chosen because it may be directly related to LCFs using a cancer risk coefficient and because of the difficulty in identifying a maximally exposed individual for shipments throughout the United States spanning the period 1943 through 2048 (106 years). The year 1943 corresponds to the start of operations at Hanford and the Oak Ridge Reservation.

Collective doses from historical shipments of spent nuclear fuel to NTS were summarized in *Summary of Doses and Health Effects* (Jones and Maheras 1994). Data for these shipments were available for 1971 through 1993 and were linearly extrapolated back to 1951, the start of operations at NTS, because data before 1971 were not available. The results of this analysis are summarized in Table L–11. Collective doses from historical shipments of low-level waste, mixed low-level waste, and TRU waste were also estimated (DOE 1996e). Over the time period 1974 through 1994, there were about 8,400 of these shipments. These

Table L–11. Cumulative Transportation-Related Radiological Collective Doses and Latent Cancer Fatalities (1943 to 2048) (person-rem)

Category	Collective Dose	
	Occupational Dose	General Population Dose
Historical shipments (DOE 1995a)	250	130
Radioactive waste to Nevada Test Site (DOE 1996e)	82	100
Reasonably foreseeable actions		
Nevada Test Site expanded use (DOE 1996e)	–	150[a]
Spent nuclear fuel management (DOE 1995a, 1996d)	360	810
Waste Management PEIS (DOE 1997a)[b]	16,000	20,000
Waste Isolation Pilot Plant (DOE 1997b)	790	5,900
Molybdenum-99 production (DOE 1996f)	240	520
Tritium supply and recycling (DOE 1995b)	–	–
Surplus highly enriched uranium disposition (DOE 1996g)	400	520
Storage and Disposition PEIS (DOE 1996a)	–	2,400[a]
Stockpile Stewardship (DOE 1996h)	–	38[a]
Pantex (DOE 1996c)	250[c]	490[c]
West Valley (DOE 1996i)	1,400	12,000
S3G and D1G prototype reactor plant disposal (DOE 1997d)	2.9–6.8	2.2–5.4
S1C prototype reactor plant disposal (DOE 1996j)	6.7	1.9
Container system for naval spent nuclear fuel (USN 1996a)	11	15
Cruiser and submarine reactor plant disposal (USN 1996b)	5.8	5.8
Submarine reactor compartment disposal (USN 1984)	–	0.053
Return of cesium 137 capsules (DOE 1994)	0.42	5.7
Uranium billets (DOE 1992)	0.50	0.014
Nitric acid (DOE 1995c)	0.43	3.1
General transportation		
1943 to 1982 (NRC 1977)	220,000	170,000
1983 to 2048 (Weiner, LaPlante, and Hageman 1991a:661–666; 1991b:655–660)	110,000	120,000
Shipments for alternatives evaluated in the SPD EIS	10	50
Summary		
Historical	330	230
Reasonably foreseeable actions	19,000	43,000
General transportation (1943 to 2048)	330,000	290,000
Shipments for alternatives evaluated in the SPD EIS	10	50
Total collective dose (rounded to nearest thousand)	349,000	333,000
Total latent cancer fatalities	140	170

[a] Includes public and occupational collective doses.
[b] Includes mixed low-level waste and low-level waste; transuranic waste included in DOE 1997b.
[c] Includes all highly enriched uranium shipped to Y–12.

shipments were estimated to result in a collective occupational dose of 82 person-rem and a collective dose for the general population of 100 person-rem.

Collective doses from other historical shipments of radioactive material were evaluated in the *Programmatic Spent Nuclear Fuel Management and Idaho National Engineering Laboratory Environmental Restoration and Waste Management Programs Final Environmental Impact Statement* (DOE 1995a). These include historical shipments associated with Hanford, INEEL, Oak Ridge, SRS, and Naval spent nuclear fuel and test specimens.

There are considerable uncertainties in these historical estimates of collective dose. For example, the population densities and transportation routes used in the dose assessments were based on census data for 1990 and the U.S. highway and rail system as it existed in the 1990s. Using census data for 1990 tends to overestimate historical collective doses because the U.S. population has continuously increased over the time covered in these assessments. Basing collective dose estimates on the U.S. highway and rail system as it existed in the 1990s may slightly underestimate doses for shipments that occurred in the 1940s, 1950s, and 1960s, because a larger portion of the transport routes would have been on non-interstate highways where the population may have been closer to the road. Data were not available that correlated transportation routes and population densities for the 1940s, 1950s, 1960s, and 1970s; therefore, it was necessary to use more recent data to make dose estimates. By the 1970s, the structure of the interstate highway system was largely fixed and most shipments would have been made on interstates.

Shipment data were linearly extrapolated for years when data were unavailable, which also results in uncertainty. However, this technique was validated by linearly extrapolating the data in the *Historical Overview of Domestic Spent Fuel Shipments–Update* (SAIC 1991) for 1973 through 1989 to estimate the number of shipments that took place during the time period 1964 through 1972 (also contained in SAIC 1991). The data in the historical overview could not be used directly because only shipment counts are presented for 1964 through 1982, and no origins or destinations were listed for years before 1983. Based on the data in the historical overview, linearly extrapolating the data for 1973 through 1989 overestimates the shipments for 1964 through 1972 by 20 percent when compared to the actual shipment counts for 1964 through 1972.

Transportation impacts may also result from reasonably foreseeable projects, such as the transportation impacts contained in other DOE National Environmental Policy Act analyses. The results of these analyses are summarized in Table L–11. For some of these analyses, a preferred alternative was not identified nor a ROD issued. In those cases, the alternative that was estimated to result in the largest transportation impact was included in Table L–11.

There are also reasonably foreseeable projects that involve limited transportation of radioactive material: (a) shipment of submarine reactor compartments from the Puget Sound Naval Shipyard to Hanford for burial, (b) return of cesium 137 isotope capsules to Hanford, (c) shipment of uranium billets from Hanford to the United Kingdom, and (d) shipment of low-specific-activity nitric acid from Hanford to the United Kingdom. While this is not an exhaustive list of projects that may involve limited transportation of radioactive material, it does illustrate that the transportation impacts associated with these types of projects are extremely low when compared to major projects or general transportation.

There are also general transportation activities that take place that are unrelated to the alternatives evaluated in the SPD EIS or to reasonably foreseeable actions. Examples of these activities are shipments of radiopharmaceuticals to nuclear medicine laboratories and shipments of commercial low-level radioactive waste to commercial disposal facilities. The NRC evaluated these types of shipments based on a survey of radioactive materials transportation published in NUREG-0170 (NRC 1977). Categories of radioactive material evaluated in NUREG-0170 included: (a) limited quantity shipments, (b) medical, (c) industrial, (d) fuel cycle, and (e) waste.

The NRC estimated that the annual collective worker dose for these shipments was 5,600 person-rem. The annual collective general population dose for these shipments was estimated to be 4,200 person-rem. Because comprehensive transportation doses were not available, these collective dose estimates were used to estimate

transportation collective doses for 1943 through 1982 (40 years). These dose estimates included spent nuclear fuel and radioactive waste shipments made by truck and rail.

Based on the transportation dose assessments in NUREG-0170, the cumulative transportation collective doses for 1943 through 1982 were estimated to be 220,000 person-rem for workers and 170,000 person-rem for the general population.

In 1983, another survey of radioactive materials transportation in the United States was conducted (Javitz et al. 1985). This survey included NRC and Agreement State licensees. Both spent nuclear fuel and radioactive waste shipments were included in the survey. Weiner, LaPlante, and Hageman (1991a:661–666, 1991b:665–660) used the survey by Javitz et al. (1985) to estimate collective doses from general transportation. The transportation dose assessments in Weiner, LaPlante, and Hageman (1991a:661–666, 1991b:665–660) were used to estimate transportation doses for 1983 through 2048 (66 years). Weiner, LaPlante, and Hageman (1991a:661–666) evaluated eight categories of radioactive material shipments by truck: (a) industrial, (b) radiography, (c) medical, (d) fuel cycle, (e) research and development, (f) unknown, (g) waste, and (h) other. Based on a median external exposure rate, an annual collective worker dose of 1,400 person-rem and an annual collective general population dose of 1,400 person-rem were estimated. Over the 66-year time period from 1983 through 2048, both the collective worker and general population doses were estimated to be 92,000 person-rem.

Weiner, LaPlante, and Hageman (1991b:655–660) also evaluated six categories of radioactive material shipments by plane: (a) industrial, (b) radiography, (c) medical, (d) research and development, (e) unknown, and (f) waste. Based on a median external exposure rate, an annual collective worker dose of 290 person-rem and an annual collective general population dose of 450 person-rem were estimated. Over the 66-year time period from 1983 through 2048, the collective worker dose was estimated to be 19,000 person-rem and the general population collective dose was estimated to be 30,000 person-rem.

Like the historical transportation dose assessments, the estimates of collective doses from general transportation also exhibit considerable uncertainty. For example, data for 1975 were applied to general transportation activities from 1943 through 1982. This approach probably overestimates doses because the amount of radioactive material that was transported in the 1950s and 1960s was less than the amount shipped in the 1970s. For example, in 1968, the shipping rate for radioactive material packages was estimated to be 300,000 packages per year (Patterson 1968:199–209); in 1975, this rate was estimated to be 2,000,000 packages per year (NRC 1977). However, because comprehensive data that would enable a more realistic transportation dose assessment are not available, the dose estimates developed by NRC were used.

Total collective worker doses from all types of shipments (historical, reasonably foreseeable actions, and general transportation) were estimated to be approximately 350,000 person-rem (140 LCFs), for the period of time 1943 through 2048 (106 years). Total general population collective doses were also estimated to be 330,000 person-rem (170 LCFs). The majority of the collective dose for workers and the general population was because of general transportation of radioactive material. The total number of LCFs over the time period 1943 through 2048 was estimated to be 310. Over this same period of time (106 years), about 54,060,000 people would die from cancer, based on 510,000 LCFs per year (DOC 1993). It should be noted that the estimated number of transportation-related LCFs would be indistinguishable from other LCFs, and the transportation-related LCFs would be 0.0000057 percent of the total number of expected LCFs during this timeframe.

L.7.2 Accident Impacts

For transportation accidents involving radioactive material, the dominant risk is from accidents that are unrelated to the cargo (i.e., traffic or vehicular accidents). Fatalities involving the shipment of radioactive materials were surveyed for 1971 through 1993 using the Radioactive Material Incident Report database. For 1971 through 1993, 21 vehicular accidents involving 36 fatalities occurred. These fatalities resulted from vehicular accidents

and were not associated with the radioactive nature of the cargo; no radiological fatalities because of transportation accidents have ever occurred in the United States. During the same period of time, over 1,100,000 persons were killed in vehicular accidents in the United States (National Safety Council 1994). About 100 additional vehicular accident fatalities were estimated to result from the transportation of radioactive material (i.e., the transportation associated with reasonably foreseeable actions and general radioactive materials transportation). During the 39-year time period from 2010 through 2048, approximately 1,600,000 people would be expected to be killed in vehicular accidents in the United States. The vehicular accident fatalities associated with radioactive materials transportation would be expected to be 0.006 percent of the total number of vehicular accident fatalities.

L.8 UNCERTAINTY AND CONSERVATISM IN ESTIMATED IMPACTS

The sequence of analyses performed to generate the estimates of radiological risk for the transportation includes: (1) determination of the inventory and characteristics, (2) estimation of shipment requirements, (3) determination of route characteristics, (4) calculation of radiation doses to exposed individuals (including estimation of environmental transport and uptake of radionuclides), and (5) estimation of health effects. Uncertainties are associated with each of these steps. Uncertainties exist in the way that the physical systems being analyzed are represented by the computational models, in the data required to exercise the models (due to measurement errors, sampling errors, natural variability, or unknowns simply caused by the future nature of the actions being analyzed), and in the calculations themselves (e.g., approximate algorithms used by the computers).

In principle, the uncertainty associated with each input or computational source can be estimated and the resultant uncertainty in each set of calculations can be predicted. Thus, the uncertainties from one set of calculations to the next can be propagated and the uncertainty in the final or absolute result can be estimated; however, conducting such a full-scale quantitative uncertainty analysis is often impractical and sometimes impossible, especially for actions to be initiated at an unspecified time in the future. Instead, the risk analysis is designed to ensure, through uniform and judicious selection of scenarios, models, and input parameters, that relative comparisons of risk among the various alternatives are meaningful. In the transportation risk assessment, this design is accomplished by uniformly applying common input parameters and assumptions to each alternative. Therefore, although considerable uncertainty is inherent in the absolute magnitude of the transportation risk for each alternative, much less uncertainty is associated with the relative differences among the alternatives in a given measure of risk.

In the following sections, areas of uncertainty are discussed for the assessment steps enumerated above. Special emphasis is placed on identifying whether the uncertainties affect relative or absolute measures of risk. The degree of conservatism of the assumption is addressed. Where practical, the parameters that most significantly affect the risk assessment results are identified.

L.8.1 Uncertainties in Material Inventory and Characterization

The inventories and the physical and radiological characteristics are important input parameters to the transportation risk assessment. The potential amount of transportation for any alternative is determined primarily by the projected nuclear material inventory and assumptions concerning shipment capacities. The physical and radiological characteristics are important in determining the amount of material released during accidents and the subsequent doses to exposed individuals through multiple environmental exposure pathways.

Uncertainties in the inventory and characterization will be reflected to some degree in the transportation risk results. If the inventory is overestimated (or underestimated), the resulting transportation risk estimates also will be overestimated (or underestimated) by roughly the same factor. However, the same inventory estimates are used to analyze the transportation impacts of each of the SPD EIS alternatives. Therefore, for comparative

purposes, the observed differences in transportation risks among alternatives are believed to represent unbiased, reasonably accurate estimates from current information in terms of relative risk comparisons.

No detailed characterization of surplus nonpit plutonium was included in the evaluation of each shipment of this material. Such information typically would not be compiled until actual shipments were being planned. Only global, conservative assumptions were used in the impact analysis. For the purpose of analysis, DOE assumed a maximum of 4.5 kg (9.9 lb) of plutonium per package, and 40 packages per SST/SGT. Actual SST/SGT shipments could handle more material. This leads to a conservative estimate of radiological accident risks for shipment of surplus nonpit plutonium for each alternative. However, since such shipments have been shown to have lower radiological accident risks than shipments of either plutonium dioxides from pits or lead assembly spent fuel, the overall effect would be very small.

L.8.2 Uncertainties in Containers, Shipment Capacities, and Number of Shipments

The amount of transportation required for each alternative is based, in part, on assumptions concerning the packaging characteristics and shipment capacities for commercial trucks and safe, secure transports. Changes in loading, tiedown, or packaging practices could affect estimates. Representative shipment capacities were defined for assessment purposes based on probable future shipment capacities. In reality, the actual shipment capacities may differ from the predicted capacities, so the projected number of shipments, and consequently the total transportation risk, would change. However, although the predicted transportation risks would increase or decrease accordingly, the relative differences in risks among alternatives would remain about the same. The maximum amount of material allowed in Type B containers is set by conservative safety analyses.

L.8.3 Uncertainties in Route Determination

Representative routes were determined between all origin and destination sites considered in the SPD EIS. The routes were determined consistent with current guidelines, regulations, and practices, but may not be the actual routes that would be used in the future. In reality, the actual routes could differ from the representative ones in terms of distances and total population along the routes. Moreover, since radioactive materials could be transported over an extended period of time starting at some time in the future, the highway infrastructures and the demographics along routes could change. These effects were not accounted for in the transportation assessment; however, it is not anticipated that these changes would significantly affect relative comparisons of risk among the alternatives considered in the SPD EIS. The dates and times that specific transportation routes would be used are classified.

L.8.4 Uncertainties in the Calculation of Radiation Doses

The models used to calculate radiation doses from transportation activities introduce a further uncertainty in the risk assessment process. It is generally difficult to estimate the accuracy or absolute uncertainty of the risk assessment results. The accuracy of the calculated results is closely related to the limitations of the computational models and the uncertainties in each of the input parameters that the model requires. The single greatest limitation facing users of RADTRAN, or any computer code of this type, is the scarcity of data for certain input parameters.

Uncertainties associated with the computational models are minimized by using state-of-the-art computer codes that have undergone extensive review. Because there are numerous uncertainties that are recognized but difficult to quantify, assumptions are made at each step of the risk assessment process that are intended to produce conservative results (i.e., overestimate the calculated dose and radiological risk). Because parameters and assumptions are applied to all alternatives, this model bias is not expected to affect the meaningfulness of relative comparisons of risk; however, the results may not represent risks in an absolute sense.

The single largest contributor to the collective population doses calculated with RADTRAN was found to be the dose to members of the public at truck stops. Currently, RADTRAN uses a simple point-source approximation for truck-stop exposures and assumes that the total stop time for a shipment is proportional to the shipment distance. The parameters used in the stop model were based on a survey of a very limited number of radioactive material shipments that examined a variety of shipment types in different areas of the country. It was assumed that stops occur as a function of distance, with a stop rate of 0.011 hr/km (0.018 hr/mi). For non-SST/SGT shipments, it was further assumed that an average of 50 people at each stop are exposed at a distance of 20 m (66 ft). In RADTRAN, the population dose is directly proportional to the external shipment dose rate and the number of people exposed, and inversely proportional to the square of the distance. For this assessment, it was assumed that many shipments (nonpit plutonium and spent nuclear fuel) would have external dose rates at the regulatory limit of 10 mrem/hr at 2 m (6.6 ft). In practice, the external dose rates would vary from shipment to shipment. The stop rate assumed results in an hour of stop time per 100 km (62 mi) of travel.

Based on the qualitative discussion with shippers, the parameter values used in the assessment appear to be conservative. However, data do not exist to quantitatively assess the degree of control, location, frequency, and duration of truck stops. However, based on the regulatory requirements of 10 CFR 73 for continuous escort of the material and the requirement for two drivers, it is clear that the trucks would be on the move much of the time until arrival at the destination. Therefore, the calculated impacts are extremely conservative. By using these conservative parameters, the calculations in the SPD EIS are consistent with the RADTRAN published values.

Shielding exposed populations is not considered. For all incident-free exposure scenarios, no credit has been taken for shielding exposed individuals. In reality, shielding would be afforded by trucks and cars sharing the transport routes, rural topography, and the houses and buildings in which people reside. Incident-free exposure to external radiation could be reduced significantly depending on the type of shielding present. For residential houses, shielding factors (i.e., the ratio of shielded to unshielded exposure rates) were estimated to range from 0.02 to 0.7, with a recommended value of 0.33. If shielding were to be considered for the maximally exposed resident living near a transport route, the calculated doses and risks would be reduced by approximately 70 percent. Similar levels of shielding may be provided to individuals exposed in vehicles.

Postaccident mitigative actions were not considered for dispersal accidents. For severe accidents involving the release and dispersal of radioactive materials in the environment, no postaccident mitigative actions, such as interdiction of crops or evacuation of the accident vicinity, were considered in this risk assessment. Postaccident mitigative measures to reduce groundshine doses (evacuation and/or decontamination) are assumed to occur 24 hours after the accident in RADTRAN analyses. Additionally, RADTRAN assumes that highly contaminated crops are not ingested (Neuhauser and Knipe 1995). Since RISKIND is modeling the worst credible accident, these measures were not considered. In reality, mitigative actions would take place following an accident in accordance with U.S. Environmental Protection Agency radiation protection guides for nuclear incidents (EPA 1992). The effects of mitigative actions on population accident doses are highly dependent on the severity, location, and timing of the accident. For this risk assessment, ingestion doses were only calculated for accidents occurring in rural areas (the calculated ingestion doses; however, it assumed, all food grown on contaminated ground is consumed and is not limited to the rural population). Interdiction of foodstuffs would act to reduce, but not eliminate, this contribution.

L.9 REFERENCES

Claus, J.M., and L.J. Shyr, 1999, *Defense Programs Transportation Risk Assessment*, Sandia National Laboratories, Albuquerque, NM, draft dated April 1999 (to be published in fall 1999).

Clauss, David B., et al., 1995, *Proceedings of the 11th International Conference on Packaging and Transportation of Radioactive Materials* (PATRAM 1995), "ADROIT: A New Model for Analyzing Risk Associated with Transportation of Nuclear Explosives and Nuclear Materials," vol. II.

Didlake, J., 1998, *Fissile Materials Disposition Program SST/SGT Transportation Estimation*, SAND98-8244, Sandia Coporation, Livermore, CA, June.

DOC (U.S. Department of Commerce), 1993, *Statistical Abstract of the United States: 1993*, 113th ed., Bureau of the Census, Washington, DC.

DOE (U.S. Department of Energy), 1992, *Environmental Assessment for the Shipment of Low Enriched Uranium Billets to the United Kingdom from the Hanford Site, Richland, Washington*, DOE/EA-0787, Richland, WA, August.

DOE (U.S. Department of Energy), 1994, *Environmental Assessment for Return of Isotope Capsules to the Waste Encapsulation and Storage Facility*, DOE/EA-0942, Washington, DC, May.

DOE (U.S. Department of Energy), 1995a, *Department of Energy Programmatic Spent Nuclear Fuel Management and Idaho National Engineering Laboratory Environmental Restoration and Waste Management Programs Final Environmental Impact Statement*, DOE/EIS-0203-F, Office of Environmental Management, Idaho Operations Office, Idaho Falls, ID, April.

DOE (U.S. Department of Energy), 1995b, *Final Programmatic Environmental Impact Statement for Tritium Supply and Recycling*, DOE/EIS-0161, Office of Reconfiguration, Washington, DC, October 19.

DOE (U.S. Department of Energy), 1995c, *Environmental Assessment: Disposition and Transportation of Surplus Radioactive Low Specific Activity Nitric Acid, Hanford Site, Richland, Washington*, DOE/EA-1005, Washington, DC, May.

DOE (U.S. Department of Energy), 1996a, *Storage and Disposition of Weapons-Usable Fissile Materials Final Programmatic Environmental Impact Statement*, DOE/EIS-0229, Office of Fissile Materials Disposition, Washington, DC, December.

DOE (U.S. Department of Energy), 1996b, *Criteria for Preparing and Packaging Plutonium Metals and Oxides for Long-Term Storage*, DOE-STD-3013-96, Washington, DC, September.

DOE (U.S. Department of Energy), 1996c, *Final Environmental Impact Statement for the Continued Operation of the Pantex Plant and Associated Storage of Nuclear Weapon Components*, DOE/EIS-0225, Albuquerque Operations Office, Albuquerque, NM, November.

DOE (U.S. Department of Energy, 1996d, *Final Environmental Impact Statement on a Proposed Nuclear Weapons Nonproliferation Policy Concerning Foreign Research Reactor Spent Nuclear Fuel*, DOE/EIS-0218F, Office of Environmental Management, Washington, DC, February.

DOE (U.S. Department of Energy), 1996e, *Final Environmental Impact Statement for the Nevada Test Site and Off-Site Locations in the State of Nevada*, DOE/EIS-0243, Nevada Operations Office, Las Vegas, NV, August.

DOE (U.S. Department of Energy), 1996f, *Medical Isotopes Production Project: Molybdenum-99 and Related Isotopes, Environmental Impact Statement*, DOE/EIS-0249F, Washington, DC, April.

DOE (U.S. Department of Energy), 1996g, *Disposition of Surplus Highly Enriched Uranium Final Environmental Impact Statement*, DOE/EIS-0240, Office of Fissile Materials Disposition, Washington, DC, June.

DOE (U.S. Department of Energy), 1996h, *Final Programmatic Environmental Impact Statement for Stockpile Stewardship and Management*, DOE/EIS-0236, Office of Technical and Environmental Support, Reconfiguration Group, Washington, DC, September.

DOE (U.S. Department of Energy), 1996i, *Draft Environmental Impact Statement for Completion of the West Valley Demonstration Project and Closure or Long-Term Management of Facilities at the Western New York Nuclear Service Center*, DOE/EIS-0226-D, Washington, DC, January.

DOE (U.S. Department of Energy), 1996j, *Final Environmental Impact Statement S1C Prototype Reactor Plant Disposal*, DOE/EIS-0275, Office of Naval Reactors, Windsor, CT, November.

DOE (U.S. Department of Energy), 1997a, *Final Waste Management Programmatic Environmental Impact Statement for Managing Treatment, Storage, and Disposal of Radioactive and Hazardous Waste*, DOE/EIS-0200-F, Office of Environmental Management, Washington, DC, May.

DOE (U.S. Department of Energy), 1997b, *Waste Isolation Pilot Plant Disposal Phase Final Supplemental Environmental Impact Statement*, DOE/EIS-0026-S-2, Carlsbad Area Office, Carlsbad, NM, September.

DOE (U.S. Department of Energy), 1997c, *Nonproliferation and Arms Control Assessment of Weapons-Usable Fissile Material Storage and Excess Plutonium Disposition Alternatives*, DOE/NN-0007, Office of Nonproliferation and National Security, Washington, DC, January.

DOE (U.S. Department of Energy), 1997d, *Final Environmental Impact Statement, Disposal of the S3G and D1G Prototype Reactor Plants*, DOE/EIS-0274, Office of Naval Reactors, Schenectady, NY, November.

DOE (U.S. Department of Energy), 1998, *Supplement Analysis for: Final Environmental Impact Statement for the Continued Operation of the Pantex Plant and Associated Storage of Nuclear Weapon Components—AL–R8 Sealed Insert Container*, Albuquerque Operations Office, Amarillo Area Office, Amarillo, TX, August.

DOT (U.S. Department of Transportation), 1992a, *Shippers—General Requirements for Shipments and Packagings*, 49 CFR 173, Washington, DC, October 1.

DOT (U.S. Department of Transportation), 1992b, *Guidelines for Selecting Preferred Highway Routes for Highway Route Controlled Quantity Shipments of Radioactive Materials*, DOT/RSPA/HMS/92-02, August.

EPA (U.S. Environmental Protection Agency), 1992, *Manual of Protective Actions for Nuclear Incidents*, EPA/400-R-92-001, Washington, DC, May.

ICRP (International Commission on Radiological Protection), 1991, *1990 Recommendations of the International Commission on Radiological Protection*, ICRP, Publication 60, Elmsford, NY.

Javitz, H.S., T.R. Lyman, C. Maxwell, E.L. Myers, and C.R. Thompson, 1985, *Transport of Radioactive Material in the United States: Results of a Survey to Determine the Magnitude and Characteristics of Domestic, Unclassified Shipments of Radioactive Materials*, SAND84-7174, Sandia National Laboratories.

Johnson, P.E., D.S. Joy, D.B. Clark, and J.M. Jacobi, 1993, *HIGHWAY 3.1, An Enhanced Transportation Routing Model: Program Description, Methodology, and Revised User's Manual*, ORNL/TM-12124, Oak Ridge National Laboratory, Oak Ridge, TN, March.

Jones, S., and S.J. Maheras, 1994, *Summary of Doses and Health Effects From Historical Offsite Spent Nuclear Fuel Shipments to the Nevada Test Site*, Engineering Design File (EDF) EIS-TRANS-31.

Low, J., 1999, U.S. Department of Energy, Albuquerque Operations Office, Albuquerque, NM, personal communication to J. Bozik, U.S. Department of Energy, Office of Fissile Materials Disposition, Washington, DC, *Response on MD NEPA Questions*, April 9.

Ludwig, S.B., R.E. Best, S.P. Schmid, and B.E. Welch, 1997, *Transportation and Packaging Issues Involving the Disposition of Surplus Plutonium as MOX Fuel in Commercial LWRs*, ORNL/TM-13427, Oak Ridge National Laboratory, Oak Ridge, TN, August.

National Safety Council, 1994, *Accident Facts, 1994 Edition*, Itasca, IL.

Neuhauser, K.S., and F.L. Kanipe, 1995, *RADTRAN 4, Volume II: Technical Manual*, SAND89-2370, Sandia National Laboratories, Albuquerque, NM, March.

NRC (U.S. Nuclear Regulatory Commission), 1977, *Final Environmental Statement on the Transportation of Radioactive Material by Air and Other Modes*, vol. 1, NUREG-0170, Office of Standards Development, Washington, DC, December.

NRC (U.S. Nuclear Regulatory Commission), 1996, *Packaging and Transportation of Radioactive Material*, 10 CFR 71, Washington, DC, January 1.

NRC (U.S. Nuclear Regulatory Commission), 1998, *Standards for Protection Against Radiation*, 10 CFR 20, Washington, DC, January 1.

O'Connor, D.G., et al., 1998a, *Hanford MOX Fuel Lead Assemblies Data Report for the Surplus Plutonium Disposition Environmental Impact Statement*, ORNL/TM-13481, Lockheed Martin Energy Research Corporation, Oak Ridge, TN, August.

O'Connor, D.G., et al., 1998b, *ANL–W MOX Fuel Lead Assemblies Data Report for the Surplus Plutonium Disposition Environmental Impact Statement*, ORNL/TM-13478, Lockheed Martin Energy Research Corporation, Oak Ridge, TN, August.

O'Connor, D.G., et al., 1998c, *LLNL MOX Fuel Lead Assemblies Data Report for the Surplus Plutonium Disposition Environmental Impact Statement*, ORNL/TM-13480, Lockheed Martin Energy Research Corporation, Oak Ridge, TN, August.

O'Connor, D.G., et al., 1998d, *LANL MOX Fuel Lead Assemblies Data Report for the Surplus Plutonium Disposition Environmental Impact Statement*, ORNL/TM-13482, Lockheed Martin Energy Research Corporation, Oak Ridge, TN, August.

O'Connor, D.G., et al., 1998e, *SRS MOX Fuel Lead Assemblies Data Report for the Surplus Plutonium Disposition Environmental Impact Statement*, ORNL/TM-13483, Lockheed Martin Energy Research Corporation, Oak Ridge, TN, August.

Patterson, D.E., 1968, *Proceedings of the Second International Symposium on Packaging and Transportation of Radioactive Materials, October 14-18, 1968, Gatlinburg, Tennessee*, "The Accident Experience of the USAEC in the Shipment of Radioactive Material," CONF-681001.

Phillips, J.S., et al., 1994, *Determination of Influence Factors and Accident Rates for the Armored Tractor/Safe Secure Trailer*, SAND93-0111, Sandia National Laboratories, Albuquerque, NM, April.

SAIC (Science Applications International Corporation), 1991, *Historical Overview of Domestic Spent Fuel Shipments—Update*, DE91 016051.

Saricks, C., and T. Kvitek, 1994, *Longitudinal Review of State-Level Accident Statistics for Carriers of Intrastate Freight*, ANL/ESD/TM-68, Argonne National Laboratory, Argonne, IL, March.

UC (Regents of the University of California), 1998a, *Pit Disassembly and Conversion Facility, Environmental Impact Statement Data Report—Hanford Site*, LA-UR-97-2907, Los Alamos National Laboratory, Los Alamos, NM, June 1.

UC (Regents for the University of California) 1998b, *Response to the Surplus Plutonium Disposition Environmental Impact Statement Data Call for a Mixed Oxide Fuel Fabrication Facility Located at the Hanford Site*, rev. 3, LA-UR-97-2064, Los Alamos National Laboratory, Los Alamos, NM, June 22.

UC (Regents for the University of California) 1998c, *Pit Disassembly and Conversion Facility, Environmental Impact Statement Data Report—Savannah River Site*, LA-UR-97-2910, Los Alamos National Laboratory, Los Alamos, NM, June 1.

UC (Regents for the University of California) 1998d, *Response to the Surplus Plutonium Disposition Environmental Impact Statement Data Call for a Mixed Oxide Fuel Fabrication Facility Located at the Savannah River Site*, rev. 3, LA-UR-97-2066, Los Alamos National Laboratory, Los Alamos, NM, June 22.

UC (Regents for the University of California) 1998e, *Pit Disassembly and Conversion Facility, Environmental Impact Statement Data Report—Pantex*, LA-UR-97-2909, Los Alamos National Laboratory, Los Alamos, NM, June 1.

UC (Regents for the University of California) 1998f, *Pit Disassembly and Conversion Facility, Environmental Impact Statement Data Report—Idaho National Engineering and Environmental Laboratory*, LA-UR-97-2908, Los Alamos National Laboratory, Los Alamos, NM, June 1.

UC (Regents for the University of California) 1998g, *Response to the Surplus Plutonium Disposition Environmental Impact Statement Data Call for a Mixed Oxide Fuel Fabrication Facility Located at the Idaho National Engineering and Environmental Laboratory*, rev. 3, LA-UR-97-2065, Los Alamos National Laboratory, Los Alamos, NM, June 22.

UC (Regents for the University of California) 1998h, *Response to the Surplus Plutonium Disposition Environmental Impact Statement Data Call for a Mixed Oxide Fuel Fabrication Facility Located at the Pantex Plant*, rev. 3, LA-UR-97-2067, Los Alamos National Laboratory, Los Alamos, NM, June 22.

| [Text deleted.]

UC (Regents for the University of California) 1999a, *Fissile Materials Disposition Program, EIS Data Call Report: Plutonium Immobilization Plant Using Ceramic in Existing Facilities at Hanford,* rev. 1, UCRL-ID-128275, Lawrence Livermore National Laboratory, Livermore, CA, September.

UC (Regent of the University of California) 1999b, *Fissle Materials Disposition Program, EIS Data Call Report: Plutonium Immobilization Plant Using Glass in Existing Facilities at Hanford,* rev. 1, UCRL-ID-128276, Lawrence Livermore National Laboratory, Livermore, CA, September.

UC (Regents for the University of California) 1999c, *Fissile Materials Disposition Program, EIS Data Call Report: Plutonium Immobilization Plant Using Ceramic in New Facilities at the Savannah River Site,* rev. 1, UCRL-ID-128273, Lawrence Livermore National Laboratory, Livermore, CA, September.

UC (Regents for the University of California) 1999d, *Fissile Materials Disposition Program, EIS Data Call Report: Plutonium Immobilization Plant Using Glass in New Facilities at the Savannah River Site,* rev. 1, UCRL-ID-128271, Lawrence Livermore National Laboratory, Livermore, CA, September.

USN (U.S. Department of the Navy), 1984, *Final Environmental Impact Statement on the Disposal of Decommissioned, Defueled Naval Submarine Reactor Plants,* PB90-193855, Washington, DC, May.

USN (U.S. Department of the Navy), 1996a, *Department of the Navy Final Environmental Impact Statement for a Container System for the Management of Naval Spent Nuclear Fuel,* DOE/EIS-0251, Arlington, VA, November.

USN (U.S. Department of the Navy), 1996b, *Final Environmental Impact Statement on the Disposal of Decommissioned, Defueled Cruiser, Ohio Class, and Los Angeles Class Naval Reactor Plants,* Bremerton, WA, April.

Weiner, R.F., P.A. LaPlante, and J.P. Hageman, 1991a, *Risk Analysis,* "An Approach to Assessing the Impacts of Incident-Free Transportation of Radioactive Materials: II. Highway Transportation," vol. 11, no. 4.

Weiner, R.F., P.A. LaPlante, and J.P. Hageman, 1991b, *Risk Analysis,* "An Approach to Assessing the Impacts of Incident-Free Transportation of Radioactive Materials: I. Air Transportation," vol. 11, no. 4.

White, V.S., 1997, *Initial Data Report in Response to the Surplus Plutonium Disposition Environmental Impact Statement Data Call for the UO_2 Supply,* rev. 1, ORNL/TM-13466, Lockheed Martin Energy Research Coporation, Oak Ridge, TN, November.

Yuan, Y.C., S.Y. Chen, B.M. Riwer, and D.J. LePoire, 1995, *RISKIND—A Computer Program for Calculating Radiological Consequences and Health Risks from Transportation of Spent Nuclear Fuel,* ANL/EAD-1, Argonne National Laboratory, Argonne, IL, November.