APPENDIX A

APPENDIX A
Wastewater Land Application Project
Technical Memorandum

Plymouth Energy LLC - Wastewater Land Application Project

PREPARED FOR: David Eaden/Plymouth Energy LLC

PREPARED BY: John Winters/CH2M HILL
Richard Haapala/CH2M HILL

DATE: January 3, 2002

Purpose

This technical memorandum summarizes CH2M HILL's evaluation of facilities needed for storage and land application of cooling tower blowdown water at the proposed Plymouth Generation Facility near Plymouth, Washington. Conceptual design for the wastewater facilities are presented in this memo. In addition, the memo provides a discussion of the requirements for land application of the blowdown water. This information will be a basis for final design of the wastewater facilities and for development of an Engineering Report. The Engineering Report will be required by the Washington State Department of Ecology as part of their waste discharge permit application process.

Background Information and References

CH2M HILL was asked to evaluate a power plant configuration that incorporates a combination wet/dry cooling and uses blowdown from 10 cycles of water reuse for the wet cooling facilities. The cooling water demand for this system is estimated by Plymouth Energy LLC as 975.286 acre-feet (AF) per year. With 10 cycles used for water in the cooling tower, the blowdown volume has been estimated by Plymouth Energy to be 98 AF.

The quality of the 10 cycle blowdown water and the estimated make-up water quality are shown on the table titled "Projected Waste Chart" included with this memorandum. The make-up water quality is based on a well water sample tested by Plymouth Energy and is also included.

Site maps prepared by Plymouth Energy show the proposed power plant location just north of a Williams Pipeline Compressor Station. This compressor station is surrounded by orchards owned by Plymouth Farms.

In our evaluation of the land application of blowdown water on this site, CH2M HILL used two key references; the Washington Irrigation Guide and the Food and Agriculture Organization, Irrigation and Drainage Paper No. 29 (FAO 29). Key excerpts from these references are attached to this memorandum.

Evaluation of Land Application System Requirements

To determine if the blowdown water could be successfully used at the Plymouth Energy LLC site for irrigation, CH2M HILL first evaluated the agricultural water quality and crop impact issues. If these quality issues could be satisfied, then the needed storage and other facilities could be sized to allow the wastewater to be incorporated into the farm's irrigation operation.

Agricultural Issues

The blowdown water quality was compared to parameters listed in FAO 29. From this review (see Table 1), CH2M HILL concludes that the salt levels of the raw blowdown water will be too high to use it directly on an orchard or most any crop. In addition, to be sure that the crop is not damaged, undiluted blowdown water should not be used for freeze protection in the spring or cooling of the fruit during the summer. Electrical conductivity levels are higher than recommended for no crop impact by FAO.

Based on our review of available farm maps and irrigation records, CH2M HILL estimated 490 acres are available for irrigation and we used this acreage for our evaluations of blowdown water use. Using monthly irrigation data from the Washington Irrigation Guide for the McNary area, we determined that the irrigation demand (apples with a grass cover crop) would be 40.07 inches per season. Other crops would use less water. By mixing blowdown water with the fresh water, the mixture's salinity will be significantly below the level where the FAO reference indicates any impact on the crop will occur.

Our review showed that there are sufficient water rights (researched by others) to meet the cooling tower needs and the irrigation demands of a variety of crops (including apples, cherries, grapes and alfalfa). Therefore, the proposed power plant construction will not be a limiting factor for continuation of farming on the approximately 490 acres available for cultivation at the Plymouth Energy LLC site.

Two irrigation scenarios which would allow disposal of the cooling tower blowdown wastewater by irrigating orchard crops were evaluated (See Plate 1). These two scenarios identify the minimum acreage needed for safe disposal of the wastewater diluted with well water or Columbia River water. Each alternative would limit the electrical conductivity (EC) of the blended water to less than 700 umhos/cm which is considered to be acceptable for irrigation of salt sensitive crops.

Needed Storage Facilities

The power plant operation will be year round and will generate moderately saline blowdown water throughout the year. Since the irrigation season typically extends from April or May through the end of October, storage will be required to collect cooling tower blowdown water during the non-irrigation periods. Following is a discussion of the storage pond sizing, proposed construction, and incorporation into the farm irrigation system.

Table 1
Plymouth Energy LLC
Water Quality Impacts to Irrigation Water

Constituent	Units	Fresh water**	Blowdown Water**	Blended Irrigation Water	Threshold No Impact to most crops*	Threshold Slight to moderate Impact to most crops*
ECw	millimhos/cm	0.39	3.93	0.55	0.70	0.70 to 3.00
TDS	mg/l	275	2750	382	450	450 to 2000
Sodium	mg/l	3	30	4	below 69	above 69
Chloride	mg/l	24	240	32	below 106	above 106

* Irrigation restrictions resulting from water quality as presented in Table 1, FAO Irrigation and Drainage Paper 29 Rev. 1

Plymouth Energy LLC

Water Quality Impacts to Orchard Crops - **10 Cycle Case**

Assumptions:

975 acre feet of groundwater from existing wells will be used for cooling tower make up water
Water will be recycled 10 times through the cooling tower and then blended with irrigation water
98 acre feet of cooling tower blowdown water will require disposal
Groundwater has an electrical conductivity (EC) of 393 umhos/cm
Cooling tower blowdown water has an EC of 3,930 umohs/cm
Columbia River water has an EC of 148 umhos/cm (WA Dept. of Ecology)
Either Columbia River water or groundwater may be used for irrigation of the apple orchard
WA Irrigation Guide shows that apples with a grass cover crop require 3.34 acre feet/acre
Sprinkler irrigation of an orchard has an application efficiency of approximately 75%
Apple orchards are considered to be salt sensitive crops (FAO 29)
EC of irrigation water should be limited to 700 umhos/cm for salt sensitive crops (FAO 29)

Case 1

Use well water for irrigation and cooling tower make up water

Determine how much well water must be added to dilute the cooling tower water to a blended irrigation water concentration of less than 700 umhos/cm and acreage to be irrigated:

$$\frac{(98 \text{ acre feet})(3930 \text{ umhos/cm})+(x \text{ acre feet})(393 \text{ umhos/cm})}{(98 \text{ acre feet})+(x \text{ acre feet})} = 700 \text{ umhos/cm}$$

x = 1031.1 acre feet of well water is required for irrigation

$$\text{Acres of apple orchard} = \frac{(1031.1 \text{ acre feet} + 98 \text{ acre feet})(.75)}{3.34 \text{ acre feet/acre}} = 254 \text{ acres}$$

Case 2

Use well water for cooling tower make up water and Columbia River water for irrigation

Determine how much river water must be added to dilute the cooling tower water to a blended irrigation water concentration of less than 700 umhos/cm and acreage to be irrigated:

$$\frac{(98 \text{ acre feet})(3930 \text{ umhos/cm})+(y \text{ acre feet})(148 \text{ umhos/cm})}{(98 \text{ acre feet})+(y \text{ acre feet})} = 700 \text{ umhos/cm}$$

y = 573.4 acre feet of river water is required for irrigation

$$\text{Acres of apple orchard} = \frac{(573.4 \text{ acre feet} + 98 \text{ acre feet})(.75)}{3.34 \text{ acre feet/acre}} = 151 \text{ acres}$$

Conclusions

Either well water or Columbia River water can be used for dilution of the blowdown water
Elevated nitrate levels in the groundwater may favor the use of Columbia River water for irrigation
Crop acreage above the calculated levels will reduce salt concentrations and ease salt management

Plate 1 - Irrigation Scenarios

Wastewater Storage Pond

The total estimated blowdown water volume was estimated by Plymouth Energy for the wet/dry system as 98 AF annually. Degree-day information provided by Plymouth Energy was the basis of CH2M HILL's distribution of the blowdown water volume to the 12 months. This distribution is shown on Table 2. This monthly distribution along with evaporation and precipitation, and irrigation requirements were used to estimate the volume of storage pond required to contain blowdown water produced during the non-irrigation season as 41 AF. Table 3 shows a month by month accumulation of the storage volume required (see column P). For our evaluation, the storage pond was assumed to be empty by November 1 when blowdown water storage would begin again.

Storage Pond

A wastewater storage pond is proposed just north of the power plant facilities and just east of the existing irrigation pond. For the conceptual design, an average water depth of 8 feet was selected for the pond plus 2 additional feet of freeboard. For the required 41 AF pond volume, a water surface area of just over 5 acres is needed. The pond layout will be approximately 4 times as long as it is wide. This allows the pond's long axis to parallel the site contours and reduce the volume of earthwork as compared to the construction of a square pond.

Pond layout was also selected to fit conditions where Department of Ecology Dam Safety Division may consider waiving their permitting process. The pond water volume is assumed to be half below the existing grade. The dike height above surrounding grade will be limited to 6 feet on its high (south) side. The interior surface of the pond dikes will be graded to 3:1 slope and the exterior slope will be 2:1 slope.

Section A (see Figure 1) through the pond shows the relationship between the pond and a new pump station. The pond maximum water surface and dike elevations will match the existing irrigation pond to permit transfer of water between the ponds without the potential of overflowing a pond.

A pipeline with isolation gate will connect the new and existing ponds to provide operational flexibility but is not required to meet storage volume required for the power plant blowdown. The pond will be lined with a 60 mil HDPE liner and installed on a sand cushion (4 inch thickness). For the conceptual layout, it is assumed that some water will always be left in the pond to prevent liner movement during wind storms. During final design, installation of ballast material on top of the liner can be considered.

CH2M HILL assumed that the power plant would include the necessary pumping facilities and pipeline to deliver the blowdown water to storage pond.

TABLE 2

Plymouth Dry and Wet Cooling Hybrid

Monthly Blowdown Estimate

	Annual Volume of Cooling Water Required =			975.286	
		Number of cycles assumed =		10	
	Total Annual Volume of Blowdown Water* =			97.53	*Ac-ft
	Month	Avg Temp*	Degree Days*	Ratio (as %) of monthly degree days to annual total	Estimated Monthly Blowdown Volume (Ac-ft)
	January	40.3	29,964	6.0%	5.83
	February	46.8	31,469	6.3%	6.13
	March	45.4	33,770	6.7%	6.57
	April	52.9	38,076	7.6%	7.41
	May	67.1	49,887	10.0%	9.71
	June	71.3	51,330	10.2%	9.99
	July	78.3	58,271	11.6%	11.34
	August	77.8	57,850	11.5%	11.26
	September	65.8	47,366	9.5%	9.22
	October	55.2	41,088	8.2%	8.00
	November	44.2	31,793	6.3%	6.19
	December	40.4	30,088	6.0%	5.86
			500,952	100.0%	97.5286
		* Data provided by NESCO sheet attached.			

TABLE 3

NESCO Plymouth Generating Facility

Blowdown Water Storage - Water Balance

	A	B	C	D	E	F	G	H	I	J	K	L	M	N	O	P	Q	R
4																		
5							(a)	(b)	c = (a+b)				d	e* = d-(a+b)				
6																		
7							Prec/Evap	Blowdown	Net Monthly						Total Withdrawl from	Cumm.Volume of	Volume of	
8		Avg.	Vol. Of	Estimated	Evap. Rate	Vol. Of	Increase	Water	Gain	WA Irr	WA Irr	Assumed	Irrigation	Required Supp.	Storage Pond by	Blowdown Water	Irrigation excluding	
9		Precip.	Precip.	Evap. (1)	(0.7 x Evap rate)	Evap.	(Decrease)	Influent (2)	(Loss)	Guide (3)	Guide	Irrig.	Required	Irrigation Water	Irrigation Booster Pump	in Storage Pond **	Blowdown Storage	Irrig.
10	Month	In/mon	Gal/mon	In/mon	In/mon	Gal/mon	Gal	(Gal)	Gal	In/mon	Gal/mon	Eff.	Gal/mon	Gal/mon	Gal/mon	Gal	Gal	Days
11	*Jan*	1.21	169,740	0	0.00	0	169,740	1,900,751	2,070,490	0		75%	-	-	-	6,326,941		0
12	*Feb*	0.88	123,447	0	0.00	0	123,447	1,996,219	2,119,666	0		75%	-	-	-	8,446,608		0
13	*Mar*	0.77	108,016	0	0.00	0	108,016	2,142,182	2,250,198	0		75%	-	-	-	10,696,806		0
14	*Apr*	0.69	96,794	0	0.00	0	96,794	2,415,331	2,512,125	0		75%	-	-	-	13,208,931		0
15	*May*	0.68	95,391	0.91	0.64	89,359	6,032	3,164,556	3,170,588	0.64	8,514,993	75%	11,353,324	8,182,735.84	5,803,200	10,576,318	8,182,736	31
16	*Jun*	0.53	74,349	7.02	4.91	689,339	(614,990)	3,256,092	2,641,101	8.60	114,420,214	75%	152,560,285	149,919,183.60	5,616,000	7,601,419	139,342,865	30
17	*Jul*	0.25	35,070	9.67	6.77	949,560	(914,490)	3,696,390	2,781,901	12.80	170,299,853	75%	227,066,470	224,284,569.70	5,803,200	4,580,120	224,284,570	31
18	*Aug*	0.61	85,571	7.68	5.38	754,149	(668,578)	3,669,684	3,001,107	10.29	136,905,116	75%	182,540,155	179,539,047.95	5,803,200	1,778,027	179,539,048	31
19	*Sep*	0.61	85,571	4.87	3.41	478,217	(392,646)	3,004,637	2,611,992	6.27	83,420,319	75%	111,227,091	108,615,099.59	5,803,200	(1,413,181)	108,615,100	31
20	*Oct*	0.71	99,599	1.46	1.02	143,367	(43,768)	2,606,396	2,562,628	1.46	19,424,827	75%	25,899,769	23,337,141.17	5,803,200	(4,653,753)	23,337,141	31
21	*Nov*	1.03	144,489	0	0.00	0	144,489	2,016,772	2,161,261	0		75%	-	-	-	2,161,261		0
22	*Dec*	1.33	186,573	0	0	0	186,573	1,908,616	2,095,190	0		75%	-	-	-	4,256,451		-
23	Total	9.30	1,304,610	31.61	22.13	3,103,990	(1,799,380)	31,777,627	29,978,247	40.06	532,985,321		710,647,094	693,877,778	34,632,000	Max vol of storage reqd:	683,301,460	185
24								or	or				or	or	or	13,208,931	or	
25								98	92				2184	2132	106	or	2100	
26	**Variables**							acre feet	acre feet				acre feet	acre feet	acre feet	41	acre feet	
27		Storage Pond Depth =		8.0	ft (water depth; freeboard not included)											acre feet		
28		Pond Dimensions (L&W)		225.0	1000									* See note 4				
29		Storage Pond Surface Area =		[illegible]	Acres (calculated value; Used in precip and evap calcs.)											** Negative number for volume indicates continuous pumping		
30		Calculated Pond Volume =		41.3	Ac-Ft											not required for entire month		
31		490	Acres of Irrigated Crop (apples with cover assumed)															
32		130	gpm = Irrigation booster pump flow rate															
33																		
34																		
35		**Notes**																
36		(1) For Plymouth site, assumed evaporation rate to equal irrigation reqd for alfalfa crop																
37		(2) Values from monthly blowdown on "Degree Day" sheet.																
38		(3) Assumed to be apples with grass cover crop																
39		(4) Calculated for irrigation months																

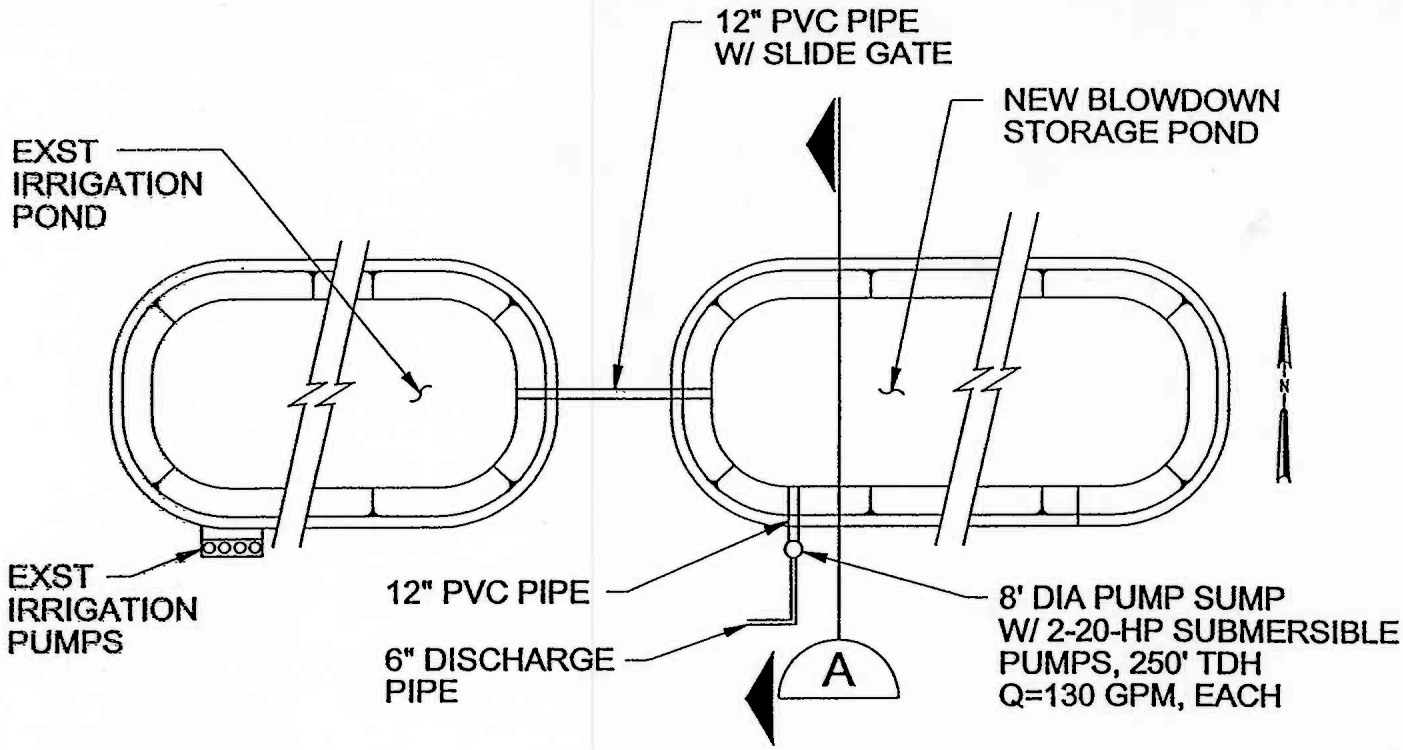

PLAN
NTS

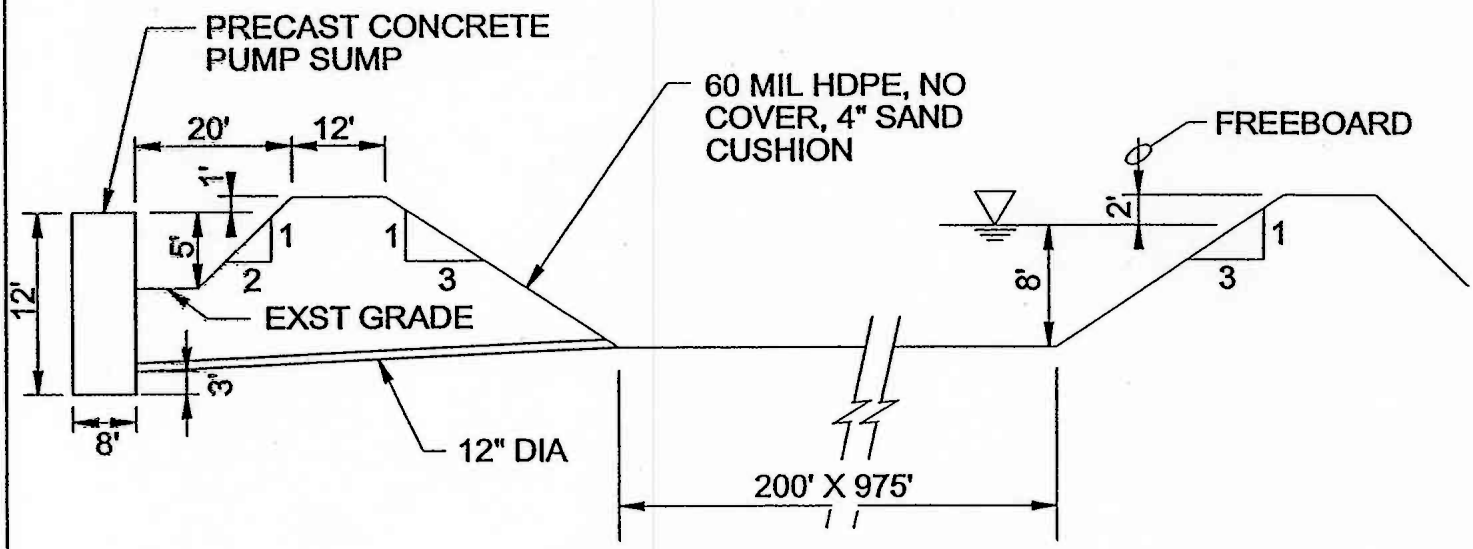

SECTION "A"
NTS

FIGURE 1

STORAGE POND LAYOUT
PLYMOUTH ENERGY LLC

CH2MHILL

DEC 20, 01 PL10D001.DWG

Pump Station

A new pump station will transfer water from the blowdown storage pond through a new pipeline to a connection point to the existing irrigation piping. Based on the water balance spreadsheet, a pump size of 130 gpm was selected. This pump size will allow the water collected during the non-irrigation months to be delivered into the irrigation system for application across the farm. The pump station will have a manhole type sump with two submersible pumps each sized for 130 gpm. The intent is for one pump to operate essentially full time during the irrigation season with the second pump as a redundant unit. The pump and storage pond are conservatively sized so that as long as the pumping operation starts before May 1, the blowdown water storage pond can be emptied prior to November 1 at the end of irrigation season. At that time, blowdown water accumulation in the pond begins again.

The pump station will have check and isolation valves for each pump and a flowmeter with volume totalizer. During final design, an inlet bar screen will be included in the layout as well as a pressure filter screen (3/32 inch opening stainless steel screen as manufactured by Custom Technology Company, Yakima, WA). These screens will remove solids that may plug the pumps and sprinkler nozzles. Other details such as air vents, low and high level alarms, remote control, etc. will be handled during the design process

Blowdown Water Pipeline to Irrigation System

To assure that the blowdown water is evenly applied to the entire farm, a new pipeline will be installed to transport water from the blowdown water storage pond to a connection to the existing irrigation supply pipeline near the farm's southwest corner. It is assumed that the pipeline from the river intake structure enters the farm property at this location on the north side of the railroad right-of-way. Introduction of the blowdown water at this point will allow the water to be blended uniformly with the river water serving the entire orchard. If the existing wells are used to irrigate the orchard, blowdown water will need to be introduced at each of these supply points.

The pipeline will be a 6-inch diameter PVC pipe rated for 200 psi. The pipeline route will be selected during final design. Figure 2 shows a typical trench section.

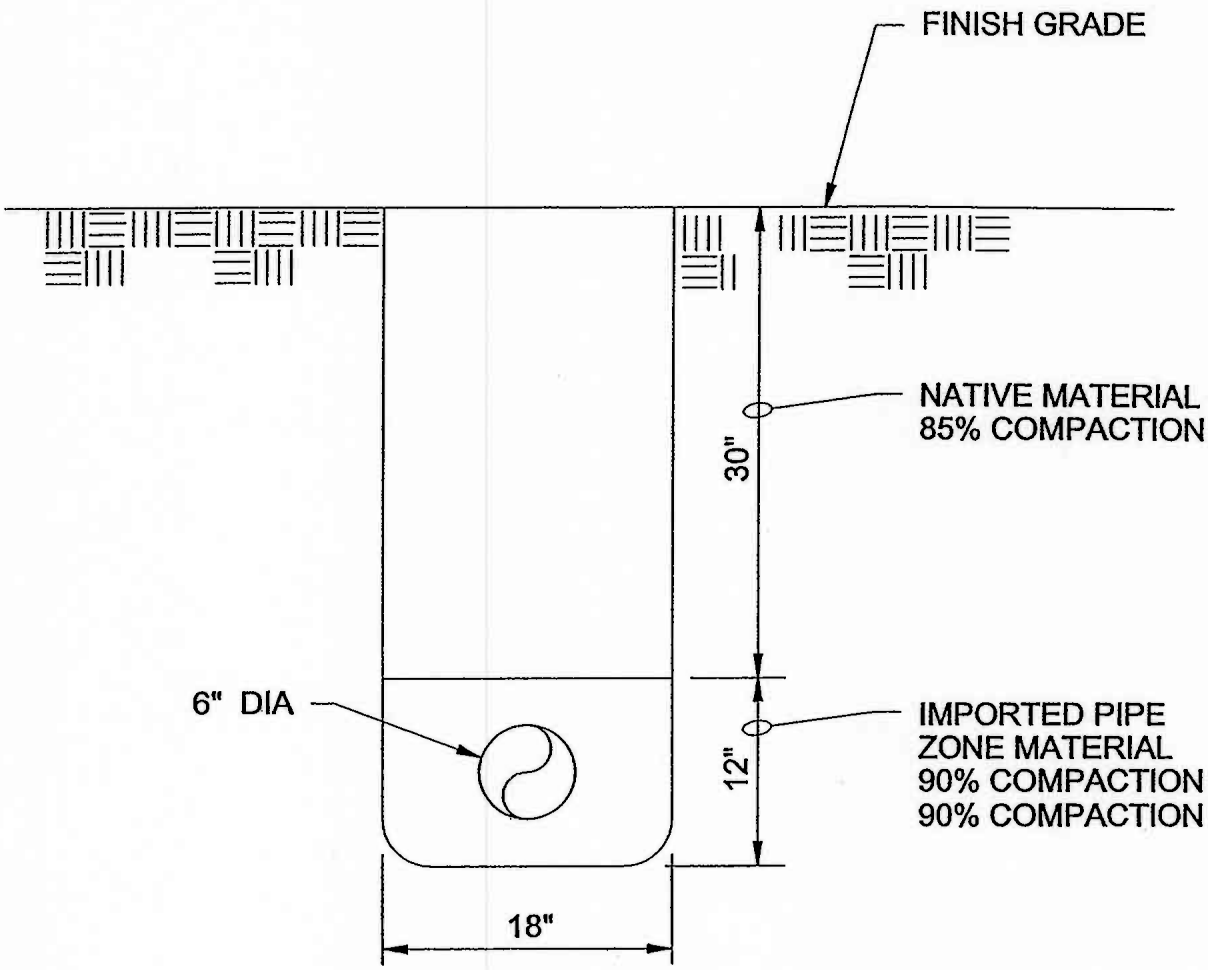

TYPICAL TRENCH DETAIL

NTS

FIGURE 2

BLOWDOWN WATER PIPELINE
PLYMOUTH ENERGY LLC

CH2MHILL

DEC 20, 01 PL10D002.DWG

Plymouth Energy Provided Information

PROJECTED WASTE CHART

Tower At 10 Cycles

Plymouth Energy

	Tower Make-Up	Tower Blowdown	RO Reject	Boiler Blowdown	Misc. Waste	Compsite Waste
Calcium mg/L as CaCO3	130	1300	520	0	130	1170
Magnesium mg/L as CaCO3	46	460	184	0	46	414
Sodium mg/L as CaCO3	7	70	28	20	7	64
Potasium mg/L as CaCO3	0	0	0	0	0	0
Ammonium mg/L as CaCO3	1.4	14.0	5.6	0.1	1.4	12.6
Bicarbonate mg/L as CaCO3	6	60	24	0	6	54
Carbonate mg/L as CaCO3	41	0	0	0	41	2
Chloride mg/L as CaCO3	34	340	136	0	34	306
Nitrate mg/L as CaCO3	23	230	92	0	23	207
Sulfate mg/L as CaCO3	66	1070	485	0	66	964
Total Hardness mg/L as CaCO3	176	1760	704	0	176	1584
Total Alkalinity mg/L as CaCO3	47	470	188	30	47	424
pH Unit	8.3	7.8	7.2	9.2	8.3	7.9
Silica mg/L as SiO2	10.4	104	41.6	0.1	10.4	94
Phosphate mg/L as PO4	0.1	6.0	0.3	6.0	0.1	5.5
Specific Conductance mmho	393	3930	1572	50	393	3539
Total Dissolved Solids mg/L Calc.	275	2750	1100	30	275	2476
Iron mg/L as Fe	0.01	0.07	0.03	0.01	0.01	0.06
BOD mg/L O2	<1	<5	0	0	0	<1
COD mg/L O2	<1	<5	0	0	0	<1
Total Suspended Solids mg/L	<1	<5	0	0	0	<5
Treatment Chemical 1	0.0	6.0	0.0	0.0	0.0	5.3
Treatment Chemical 2	0.0	2.0	0.0	0.0	0.0	1.8
Treatment Chemical 3	NA	NA	NA	NA	NA	NA
Free Chlorine mg/L Cl2	0.0	0.3	0.0	0.0	0.0	0.3
Flow GPM	1114	110	5	5	5	125

Treatment Chemical 1 = BF Goodrich Goodrite K-775 Copolymer
Treatment Chemical 2 = Monsanto Dequest 2010 HEDP Phosphonate

Prepared by **Pengelly and Associates** phone 503-201-4175 fax 541-850-8228

Washington Irrigation Guide – McNary Area

Food and Agriculture Organization – Excerpts

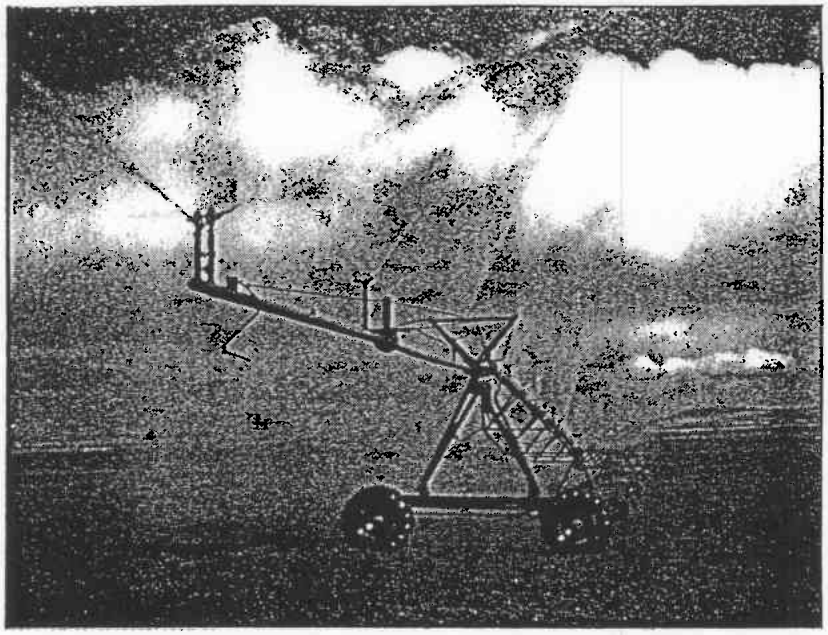

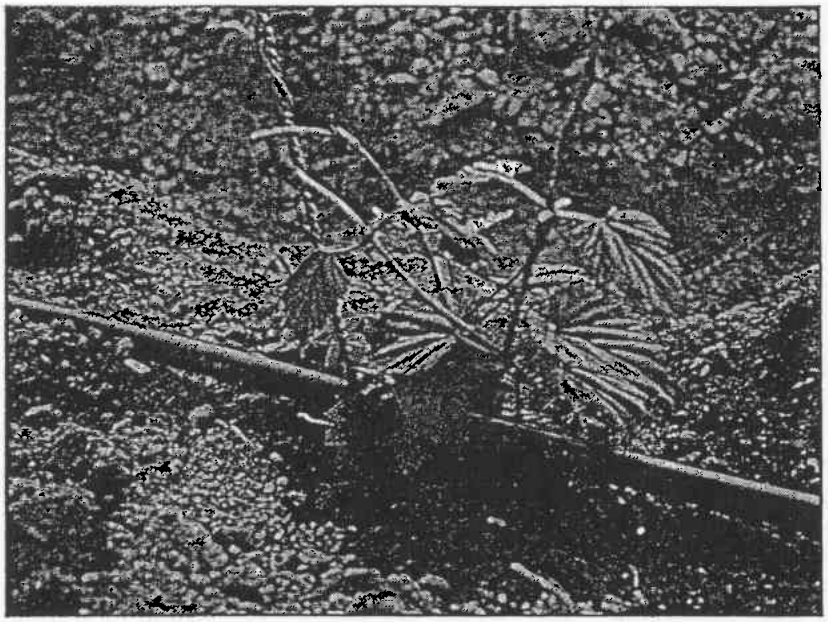

State Of Washington Irrigation Guide, 1985

Prepared by
United States
Department of
Agriculture

Soil Conservation
Service

In Cooperation with
Washington State
Cooperative Extension
Service

MC NARY DAM*

MC NARY DAM * 45.95 LATITUDE

	JAN	FEB	MAR	APR	MAY	JUN	JUL	AUG	SEP	OCT	NOV	DEC	TOTAL
MEAN TEMPERATURE (F)	32.0	39.0	46.0	52.4	60.0	66.7	73.8	73.9	64.8	53.8	42.4	35.1	
TOTAL PRECIPITATION (IN)	1.21	.88	.77	.69	.68	.53	.25	.61	.61	.71	1.03	1.33	9.30
EFFECTIVE PRECIP (IN)	.00	.19	.50	.50	.56	.48	.25	.58	.48	.47	.29	.00	4.30

ALFALFA — BEG 5/25 END 10/27

	JAN	FEB	MAR	APR	MAY	JUN	JUL	AUG	SEP	OCT	NOV	DEC	SEASON
MONTHLY NET IRRIG REQUIRE(IN)	.00	.00	.00	.00	.91	7.02	9.67	7.68	4.87	1.46	.00	.00	31.61
AV. PAN FACTOR	.76	.76	.76	.76	.76	.76	.76	.76	.76	.76	.76	.76	

CLOVER — BEG 5/25 END 10/27

	JAN	FEB	MAR	APR	MAY	JUN	JUL	AUG	SEP	OCT	NOV	DEC	SEASON
MONTHLY NET IRRIG REQUIRE(IN)	.00	.00	.00	.00	1.02	7.81	10.71	8.55	5.43	1.67	.00	.00	35.20
AV. PAN FACTOR	.84	.84	.84	.84	.84	.84	.84	.84	.84	.84	.84	.84	

PASTURE/TURF — BEG 5/25 END 10/27

	JAN	FEB	MAR	APR	MAY	JUN	JUL	AUG	SEP	OCT	NOV	DEC	SEASON
MONTHLY NET IRRIG REQUIRE(IN)	.00	.00	.00	.00	.97	7.42	10.19	8.12	5.15	1.56	.00	.00	33.40
AV. PAN FACTOR	.80	.80	.80	.80	.80	.80	.80	.80	.80	.80	.80	.80	

APPLES W/COVER — BEG 5/26 END 10/27

	JAN	FEB	MAR	APR	MAY	JUN	JUL	AUG	SEP	OCT	NOV	DEC	SEASON
MONTHLY NET IRRIG REQUIRE(IN)	.00	.00	.00	.00	.64	8.60	12.80	10.29	6.27	1.46	.00	.00	40.07
AV. PAN FACTOR	.36	.36	.36	.36	.68	.92	1.00	1.00	.96	.76	.36	.36	

APRICOTS W/COVER — BEG 4/28 END 10/27

	JAN	FEB	MAR	APR	MAY	JUN	JUL	AUG	SEP	OCT	NOV	DEC	SEASON
MONTHLY NET IRRIG REQUIRE(IN)	.00	.00	.00	.04	4.77	7.81	11.76	9.42	5.71	1.24	.00	.00	40.76
AV. PAN FACTOR	.36	.36	.36	.36	.64	.84	.92	.92	.88	.68	.36	.36	

CHERRY W/COVER — BEG 5/17 END 10/27

	JAN	FEB	MAR	APR	MAY	JUN	JUL	AUG	SEP	OCT	NOV	DEC	SEASON
MONTHLY NET IRRIG REQUIRE(IN)	.00	.00	.00	.00	2.09	8.60	12.80	10.29	6.27	1.46	.00	.00	41.52
AV. PAN FACTOR	.36	.36	.36	.36	.68	.92	1.00	1.00	.96	.76	.36	.36	

PEACH W/COVER — BEG 5/ 7 END 10/27

	JAN	FEB	MAR	APR	MAY	JUN	JUL	AUG	SEP	OCT	NOV	DEC	SEASON
MONTHLY NET IRRIG REQUIRE(IN)	.00	.00	.00	.00	3.46	7.81	11.76	9.42	5.71	1.24	.00	.00	39.39
AV. PAN FACTOR	.36	.36	.36	.36	.64	.84	.92	.92	.88	.68	.36	.36	

PEAR & PLUM W/COVER — BEG 5/19 END 10/27

	JAN	FEB	MAR	APR	MAY	JUN	JUL	AUG	SEP	OCT	NOV	DEC	SEASON
MONTHLY NET IRRIG REQUIRE(IN)	.00	.00	.00	.00	1.65	7.81	11.76	9.42	5.71	1.24	.00	.00	37.59
AV. PAN FACTOR	.36	.36	.36	.36	.64	.84	.92	.92	.88	.68	.36	.36	

APPLES W/O COVER — BEG 5/26 END 10/27

	JAN	FEB	MAR	APR	MAY	JUN	JUL	AUG	SEP	OCT	NOV	DEC	SEASON
MONTHLY NET IRRIG REQUIRE(IN)	.00	.00	.00	.00	.43	6.23	10.19	8.12	4.87	.91	.00	.00	30.75
AV. PAN FACTOR	.32	.32	.32	.32	.48	.68	.80	.80	.76	.56	.32	.32	

12/11/01
from Jim
Jordah!

Water quality for agriculture

CH2M HILL LIBRARY - PDX

by
R.S. Ayers
Soil and Water Specialist (Emeritus)
University of California
Davis, California, USA

and
D.W. Westcot
Senior Land and Water Resources Specialist
California Regional Water Quality Control Board
Sacramento, California, USA

Table 1

GUIDELINES FOR INTERPRETATIONS OF WATER QUALITY FOR IRRIGATION[1]

Potential Irrigation Problem	Units	Degree of Restriction on Use		
		None	Slight to Moderate	Severe
Salinity *(affects crop water availability)*[2]				
EC_w	dS/m	< 0.7	0.7 – 3.0	> 3.0
(or)				
TDS	mg/l	< 450	450 – 2000	> 2000
Infiltration *(affects infiltration rate of water into the soil. Evaluate using EC_w and SAR together)*[3]				
SAR = 0 – 3 and EC_w =		> 0.7	0.7 – 0.2	< 0.2
= 3 – 6 =		> 1.2	1.2 – 0.3	< 0.3
= 6 – 12 =		> 1.9	1.9 – 0.5	< 0.5
= 12 – 20 =		> 2.9	2.9 – 1.3	< 1.3
= 20 – 40 =		> 5.0	5.0 – 2.9	< 2.9
Specific Ion Toxicity *(affects sensitive crops)*				
Sodium (Na)[4]				
surface irrigation	SAR	< 3	3 – 9	> 9
sprinkler irrigation	me/l	< 3	> 3	
Chloride (Cl)[4]				
surface irrigation	me/l	< 4	4 – 10	> 10
sprinkler irrigation	me/l	< 3	> 3	
Boron (B)[5]	mg/l	< 0.7	0.7 – 3.0	> 3.0
Trace Elements (see Table 21)				
Miscellaneous Effects *(affects susceptible crops)*				
Nitrogen (NO_3 – N)[6]	mg/l	< 5	5 – 30	> 30
Bicarbonate (HCO_3) *(overhead sprinkling only)*	me/l	< 1.5	1.5 – 8.5	> 8.5
pH		Normal Range 6.5 – 8.4		

[1] Adapted from University of California Committee of Consultants 1974.

[2] ECw means electrical conductivity, a measure of the water salinity, reported in decisiemens per metre at 25°C (dS/m) or in units millimhos per centimetre (mmho/cm). Both are equivalent. TDS means total dissolved solids, reported in milligrams per litre (mg/l).

[3] SAR means sodium adsorption ratio. SAR is sometimes reported by the symbol RNa. See Figure 1 for the SAR calculation procedure. At a given SAR, infiltration rate increases as water salinity increases. Evaluate the potential infiltration problem by SAR as modified by ECw. Adapted from Rhoades 1977, and Oster and Schroer 1979.

[4] For surface irrigation, most tree crops and woody plants are sensitive to sodium and chloride; use the values shown. Most annual crops are not sensitive; use the salinity tolerance tables (Tables 4 and 5). For chloride tolerance of selected fruit crops, see Table 14. With overhead sprinkler irrigation and low humidity (< 30 percent), sodium and chloride may be absorbed through the leaves of sensitive crops. For crop sensitivity to absorption, see Tables 18, 19 and 20.

[5] For boron tolerances, see Tables 16 and 17.

[6] NO_3–N means nitrate nitrogen reported in terms of elemental nitrogen (NH_4–N and Organic–N should be included when wastewater is being tested).

Columbia River Water Quality Data Near Plymouth Site

Water Quality Data Summary for Columbia River at Umatilla (Station 31A070)

Ambient Monitoring Data Reported by WA Department of Ecology

Last Updated 1-Apr-2001

Date	Time	Temp (C)	Flow (CFS)	Cond-uctivity (umhos)	Oxygen (mg/L)	Oxygen Saturation (%)	pH	Suspend Solids (mg/L)	Turbidity (NTU)	Nitrate (mg/l)
09/06/2000	630	17.2		121	9.8	101.4	8.0	5	2.7	0.1
08/16/2000	1045	18.5		116	10.3	110.4	7.9	5	3.0	0.1
07/12/2000	1345	16.5		116	9.9	102.2	8.0	5	4.3	0.1
06/07/2000	1845	13.6		96	10.6	103.8	7.8	1	6.4	0.1
05/03/2000	950	9.3		128	12.4	109.6	9.0	0	5.5	0.1
04/05/2000	1000	7.1		147	12.6	104.9	7.8	7	4.1	0.3
03/08/2000	900	3.4		173	12.4	101.5	7.6	8	4.6	0.5
02/09/2000	915	2.2		192	14.2	103.6	8.4	3	2.2	0.4
01/05/2000	1000	3.8		138	12.3	92.8	7.6	2	1.6	0.2
Average		10.2		136	11.6	103.4	8.0	4	3.8	0.2

Date	Time	Temp (C)	Flow (CFS)	Cond-uctivity (umhos)	Oxygen (mg/L)	Oxygen Saturation (%)	pH	Suspend Solids (mg/L)	Turbidity (NTU)	Nitrate (mg/l)
12/08/1999	1010	6.8		141	11.4	93.3	7.9	3	2.2	0.2
11/03/1999	655	8.5		375	10.8	92.5	5.4	11	3.8	0.2
10/06/1999	945	14.3		129	9.7	95.2	7.8	5	2.6	0.2
09/08/1999	950	17.1	173,100	121	10.4	108.6	8.2	7	4.4	0.1
08/04/1999	950	18.8	230,000	119	10.1	112.2	8.0	9	5.2	0.1
07/07/1999	1010	14.8	210,800	112	11.1	109.8	8.2	10	5.5	0.1
06/16/1999	1115	13.9	338,000	118	12.0	117.2	8.3	10	6.1	0.1
05/12/1999	700	9.4	273,900	134	12.7	111.2	8.3	8	6.1	0.2
04/14/1999	915	6.8	254,500	160	13.4	107.3	7.2	6	8.0	0.4
03/17/1999	815	4.0	243,600	170	13.9	106.5	7.7	5	5.7	0.4
02/03/1999	700	2.3	203,200	121	13.9	102.0	7.7	4	5.7	0.4
01/13/1999	900	3.8	216,100	198	13.6	103.1	7.2	5	6.6	0.5
Average		10.0	238,133	158	11.9	104.9	7.7	7	5.2	0.2

Date	Time	Temp (C)	Flow (CFS)	Cond-uctivity (umhos)	Oxygen (mg/L)	Oxygen Saturation (%)	pH	Suspend Solids (mg/L)	Turbidity (NTU)	Nitrate (mg/l)
12/16/1998	705	6.5	151,000	169	11.2	89.8	6.6	3	1.7	0.3
11/03/1998	1650	12.6	106,500	176	10.6	99.3	8.5	4	1.7	0.2
10/14/1998	810	15.1	118,200	182	9.5	94.6	7.4	4	1.7	0.2
09/08/1998	1900	22.4	113,400	149	9.6	112.3	8.6	5	2.9	0.1
08/12/1998	730	20.9	175,000	140	9.8	109.4	8.2	7	3.4	
07/15/1998	635	19.1	234,000	119	9.7	104.3	7.5	7	4.9	0.1
06/16/1998	1900	15.0	236,200	111	11.3	113.4	8.2	8	7.3	0.1
05/12/1998	1830	11.8	308,000	106	12.2	115.4	8.1	8	7.4	0.3
04/08/1998	810	7.3	170,000	169	12.1	101.5	8.0	44	5.2	0.3
03/11/1998	720	4.4	180,000	165	12.9	99.1	7.9	5	3.2	0.4
02/11/1998	735	3.2	218,000	168	12.7	95.5	7.8	4	3.4	0.4
Average		12.6	182,755	150	11.1	103.1	7.9	9	3.9	0.2
Three Year Average		10.9	210,444	148	11.5	103.8	7.9	7	4.3	0.2