NOT MEASUREMENT
SENSITIVE

DOE-HDBK-1092-XX
XXXX 2004

DOE HANDBOOK

ELECTRICAL SAFETY

U.S. Department of Energy

Washington, D.C. 20585

AREA SAFT

DISTRIBUTION STATEMENT A. Approved for public release; distribution is unlimited.

This document has been reproduced directly from the best available copy.

Available to DOE and DOE contractors from the Office of Scientific and Technical Information, P.O. Box 62, Oak Ridge, TN 37831; (423) 576-8401.

Available to the public from the U.S. Department of Commerce, Technology Administration, National Technical Information Service, Springfield, VA 22161; (703) 487-4650.

Order No. DE98001290

CONTENTS

1.0 INTRODUCTION 1-1
1.1 PURPOSE 1-1
1.2 SCOPE 1-1
1.3 AUTHORITY HAVING JURISDICTION (AHJ) 1-2
2.0 GENERAL REQUIREMENTS 2-1
2.1 ELECTRICAL MAINTENANCE OR REPAIRS 2-1
2.1.1 WORK ON ENERGIZED/DEENERGIZED ELECTRICAL EQUIPMENT 2-1
2.1.2 CONSIDERATIONS FOR WORKING ON ENERGIZED SYSTEMS AND EQUIPMENT 2-1
2.1.3. SAFETY WATCH RESPONSIBILITIES AND QUALIFICATIONS 2-2
2.2 BASIC SAFEGUARDS 2-2
2.3 RESPONSIBILITIES 2-3
2.3.1 MANAGEMENT RESPONSIBILITIES 2-3
2.3.2 EMPLOYEE RESPONSIBILITIES 2-3
2.4 REVIEWS/INSPECTIONS 2-3
2.5 APPROVAL OF ELECTRICAL EQUIPMENT 2-4
2.6 CODES, STANDARDS, AND REGULATIONS 2-4
2.7 GROUND FAULT CIRCUIT INTERRUPTERS 2-5
2.7.1 HOW A GFCI WORKS 2-5
2.7.2 USES 2-6
2.8 TRAINING AND QUALIFICATIONS OF QUALIFIED WORKERS 2-7
2.8.1 FORMAL TRAINING AND QUALIFICATIONS 2-8
2.8.2 TRAINING OF SAFETY PERSONNEL 2-8
2.9 WORKING SPACE AROUND ELECTRICAL EQUIPMENT 2-9
2.9.1 ELECTRICAL EQUIPMENT RATED AT 600 VOLTS OR LESS 2-9
2.9.2 ELECTRICAL EQUIPMENT RATED OVER 600 VOLTS 2-9
2.10 IDENTIFICATION OF DISCONNECTION MEANS 2-10
2.10.1 DISCONNECTING MEANS 2-10
2.10.2 PANELBOARD CIRCUIT DIRECTORIES 2-11
2.10.3 ENCLOSURE LABELING 2-11
2.10.4 LOAD LABELING 2-11
2.10.5 SOURCE LABELING 2-11
2.11 WORK INSTRUCTIONS 2-11
2.11.1 SAFE WORK INSTRUCTIONS AND SUPERVISION 2-12
2.12 ELECTRICAL PERSONAL PROTECTIVE EQUIPMENT (PPE) 2-13

2.12.1 MANAGEMENT'S RESPONSIBILITIES 2-13
2.12.2 INSPECTING PPE 2-13
2.12.3 CLEANING AND ELECTRICAL TESTING OF PPE 2-13
2.12.3.1 TESTING 2-14
2.12.3.2 TESTING APPARATUS 2-14
2.12.3.3 RETESTED PPE 2-14
2.12.4 LIVE-LINE TOOLS 2-14
2.12.4.1 FIBERGLASS-HANDLED TOOLS 2-14
2.12.4.2 WOODEN-HANDLED TOOLS 2-14
2.12.5 MAXIMUM USAGE VOLTAGE 2-14
2.12.6 MAXIMUM USAGE VOLTAGE FOR LIVE-LINE TOOLS 2-15
2.12.7 RUBBER-INSULATED GLOVES 2-15
2.12.8 STORAGE 2-15
2.12.9 SAFETY SHOES, HATS, AND GLASSES 2-15
2.13 WORK PRACTICES 2-15
2.13.1 TRAINING 2-16
2.13.1.1 LIVE PARTS 2-16
2.13.1.2 SAFE PROCEDURE 2-16
2.13.1.3 CIRCUITS AND EQUIPMENT 2-16
2.13.1.4 STORED ELECTRICAL ENERGY 2-16
2.13.1.5 STORED NONELECTRICAL ENERGY 2-16
2.13.1.6 LOCKOUT/TAGOUT PROCEDURE 2-16
2.13.2 VERIFICATION OF DEENERGIZED CONDITION 2-17
2.13.2.1 VOLTAGE VERIFICATION TEST 2-17
2.13.2.2 APPLICATION OF GROUNDS 2-17
2.13.3 REENERGIZING EQUIPMENT 2-17
2.13.3.1 TESTS AND VISUAL INSPECTIONS 2-18
2.13.3.2 WARNING EMPLOYEES 2-18
2.13.4.1 APPROACH DISTANCE 2-18
2.13.4.2 TWO WORKERS 2-19
2.13.4.4 ILLUMINATION 2-19
2.13.4.5 SYSTEMS UNDER LOAD 2-19
2.13.4.6 WORKING WITH TEST INSTRUMENTS AND EQUIPMENT 2-19
2.13.4.6.1 QUALIFIED EMPLOYEES 2-19
2.13.4.6.2 VISUAL INSPECTIONS 2-20
2.13.4.6.3 RATING INSTRUMENTS AND EQUIPMENT 2-20
2.13.4.6.4 CALIBRATION OF ELECTRICAL INSTRUMENTS 2-20

3.0 ELECTRICAL PREVENTIVE MAINTENANCE 3-1
3.1 DEVELOPMENT AND IMPLEMENTATION REQUIREMENTS 3-1
3.2 DEFINITION 3-1
3.3 MAINTENANCE 3-1
3.4 INSPECTION 3-2
3.5 ESSENTIAL ELEMENTS 3-3
3.6 PLANNING AND DEVELOPING AN EPM PROGRAM, AND FUNDAMENTALS OF EPM 3-3
3.7 GROUND-FAULT PROTECTION 3-3
4.0 GROUNDING 4-1
4.1 REGULATIONS, CODES, AND REFERENCES 4-1
4.1.1 ENGINEERING SPECIFICATIONS AND DRAWINGS 4-1
4.2 CIRCUIT AND SYSTEM GROUNDING 4-1
4.3 EQUIPMENT GROUNDING 4-1
4.4 BONDING 4-2
4.5 GROUNDED OR UNGROUNDED SYSTEMS 4-2
4.5.1 GROUNDED SYSTEMS 4-3
4.5.2 UNGROUNDED SYSTEMS 4-4
4.5.3 HIGH-IMPEDANCE GROUNDING 4-5
4.7 GROUNDING ELECTRODE CONDUCTOR (GEC) 4-6
4.7.1 SIZING THE GROUNDING ELECTRODE CONDUCTOR 4-8
4.7.2 EXCEPTIONS TO NEC 250-66 4-8
4.8 MAIN BONDING JUMPER 4-8
4.9 SYSTEM WITH GROUNDED CONDUCTOR 4-9
4.10 EQUIPMENT GROUNDING CONDUCTOR 4-11
4.10.1 SIZING THE EQUIPMENT GROUNDING CONDUCTOR 4-12
4.10.2 SEPARATE EQUIPMENT GROUNDING CONDUCTORS 4-12
4.11 UNGROUNDED SYSTEMS 4-13
4.12 GROUNDING A SEPARATELY DERIVED SYSTEM 4-13
4.13 GROUNDING ELECTRODE SYSTEM 4-14
4.14 GROUND-FAULT PROTECTION OF EQUIPMENT 4-15
4.15 PERSONNEL PROTECTIVE GROUNDS 4-15
4.15.1 PURPOSE OF PERSONNEL PROTECTIVE GROUNDS 4-16
4.15.2 CRITERIA FOR PERSONNEL PROTECTIVE GROUNDS 4-16
4.15.3 GROUNDING CLAMPS 4-17
4.15.4 SCREW-TIGHTENING DEVICES 4-17
4.15.5 GROUNDING CABLE LENGTH 4-17
4.15.6 GROUNDING CABLE CONNECTION 4-17

4.15.7 CONNECTING GROUNDING CABLES IN SEQUENCE 4-17
4.15.8 REMOVING PROTECTIVE GROUNDS 4-18
4.15.9 PROTECTIVE APPAREL AND EQUIPMENT 4-18
5.0 SPECIAL OCCUPANCIES....5-1
5.1 EXPLOSIVES....5-1
5.1.1 EVACUATION....5-1
5.1.2 SHUTDOWN OF OPERATIONS 5-1
5.1.3 LIGHTNING PROTECTION....5-1
5.1.4 STATIC ELECTRICITY....5-2
5.1.4.1 BONDING AND GROUNDING EQUIPMENT 5-2
5.1.4.2 TESTING EQUIPMENT GROUNDING SYSTEMS....5-2
5.1.4.3 CONDUCTIVE FLOORS, SHOES, MATS, AND WRISTBANDS....5-3
5.1.4.4 SPECIFICATIONS FOR CONDUCTIVE FLOORS AND WRISTBANDS 5-3
5.1.4.5 CONDUCTIVE FLOOR TEST 5-3
5.1.4.6 HUMIDIFICATION 5-4
5.1.4.7 GROUND-FAULT CIRCUIT INTERRUPTER....5-5
5.1.5 ELECTRICAL EQUIPMENT AND WIRING 5-5
5.1.5.1 PERMANENT EQUIPMENT AND WIRING....5-5
5.1.5.2 HAZARDOUS LOCATIONS 5-5
5.1.5.3 ELECTRICAL SUPPLY SYSTEMS 5-6
5.1.5.4 BUILDING SERVICE ENTRANCE 5-7
5.1.6 TESTING....5-7
5.1.6.1 TEST SETUP....5-8
5.1.6.2 PIN SWITCHES AND OTHER NONINITIATING CIRCUITS 5-8
5.1.6.3 LIGHTNING STORMS....5-8
5.1.6.4 LOW-ENERGY ELECTROEXPLOSIVE DEVICES....5-8
5.1.6.5 WARNING SIGNALS....5-11
5.1.6.6 FIRING LEADS....5-11
5.1.6.7 ELECTRICAL TESTING INSTRUMENTS FOR USE WITH EXPLOSIVES SYSTEMS....5-11
5.1.6.7.1 CLASSIFICATION....5-11
5.1.6.7.2 CERTIFICATION....5-11
5.1.6.7.3 ELECTRICAL TESTING INSTRUMENTS FOR USE WITH INITIATING ELECTRICAL CIRCUITS 5-12
5.1.6.7.4 ELECTRICAL TESTING INSTRUMENTS FOR USE WITH NONINITIATING ELECTRICAL CIRCUITS 5-12
5.2 PREVENTION OF EXTERNAL IGNITION AND EXPLOSION 5-12
5.2.1 SOURCES OF IGNITION 5-13

5.2.2 COMBUSTION PRINCIPLES 5-14
5.2.3 EVALUATION OF HAZARDOUS AREAS 5-14
5.2.4 INTRINSICALLY SAFE EQUIPMENT 5-14
5.2.5 ENCLOSURES 5-14
5.2.6 PURGING/PRESSURIZATION SYSTEMS 5-16
5.3 HAZARDOUS LOCATIONS 5-17
5.3.1 CLASS I 5-17
5.3.1.1 DIVISION 1 5-18
5.3.1.2 DIVISION 2 5-21
5.3.2 CLASS II 5-21
5.3.2.1 CLASS II DIVISION 1 5-21
5.3.2.2 CLASS II DIVISION 2 5-23
5.3.3 GROUPS 5-23
5.3.4 IGNITION TEMPERATURE 5-23
5.3.5 FLAMMABLE (EXPLOSION) LIMITS 5-24
5.3.6 FLASHPOINT 5-24
5.4 ELECTRICAL EQUIPMENT FOR CLASS I, II, AND III AREAS 5-24
5.4.1 SEALS AND DRAINS 5-24
5.4.1.1 SEALS 5-24
5.4.1.2 DRAINS 5-25
5.4.1.3 SELECTION OF SEALS AND DRAINS 5-25
5.4.1.3.1 PRIMARY CONSIDERATIONS 5-26
5.4.1.3.2 TYPES OF SEALING FITTINGS 5-26
5.5 MANUFACTURERS' DIGEST 5-26
5.6 DESCRIPTIONS, FEATURES, AND TEST CRITERIA OF ENCLOSURES FOR HAZARDOUS (CLASSIFIED) LOCATIONS (PER NEMA 250) 5-27
5.7 TYPE 7 ENCLOSURES 5-27
5.7.1 DESCRIPTION AND APPLICATION 5-27
5.7.2 FEATURES AND TEST CRITERIA 5-28
5.8 TYPE 8 ENCLOSURES 5-28
5.8.1 DESCRIPTION AND APPLICATION 5-28
5.8.2 FEATURES AND TEST CRITERIA 5-28
5.9 TYPE 9 ENCLOSURES 5-29
5.9.1 DESCRIPTION AND APPLICATION 5-29
5.9.2 FEATURES AND TEST CRITERIA 5-29
5.10 UNDERGROUND FACILITIES 5-29
5.10.1 WORK ON ELECTRICAL EQUIPMENT AND CIRCUITS 5-30

5.10.2 GROUNDING 5-31
5.10.3 POWER CABLES AND CONDUCTORS 5-31
5.10.4 TRAILING CABLES 5-32
5.10.5 TROLLEY CIRCUITS FOR TRACK HAULAGE 5-32
6.0 REQUIREMENTS FOR SPECIFIC EQUIPMENT 6-1
6.1 CONVEYING SYSTEMS 6-1
6.1.1 GENERAL DESIGN, INSTALLATION, MAINTENANCE, AND INSPECTION REQUIREMENTS 6-1
6.1.2 ELECTRICAL DESIGN CRITERIA 6-1
6.2 CRANES AND HOISTS 6-2
6.2.1 NEC GENERAL REQUIREMENTS 6-2
6.2.2 DISCONNECTING MEANS 6-3
6.2.3 GROUNDING 6-4
6.2.4 CONTROL 6-4
6.2.5 CLEARANCES 6-5
6.2.6 OSHA AND NEC REQUIREMENTS 6-5
6.2.7 MAINTENANCE AND OPERATIONS 6-5
6.2.8 DOCUMENTED MAINTENANCE 6-5
6.2.9 MECHANICAL ELEVATING AND ROTATING EQUIPMENT 6-6
6.3 ELEVATORS AND ESCALATORS 6-6
6.3.1 CODES AND STANDARDS 6-6
6.3.2 DESIGN SPECIFICATIONS 6-7
6.3.2.1 VOLTAGE AND CURRENT LIMITATIONS 6-7
6.3.2.2 CONDUCTORS 6-7
6.3.2.3 DISCONNECTING MEANS 6-8
6.3.2.4 MOTORS 6-8
6.3.2.5 GROUNDING 6-9
6.3.2.6 OVERSPEED PROTECTION 6-9
6.3.3 EMERGENCY POWER 6-9
6.3.4 DESIGN 6-9
6.3.5 FIRE PROTECTION 6-10
6.3.6 INSPECTIONS AND RECORDS 6-10
6.3.6.1 CODES 6-11
6.3.6.2 INSPECTOR QUALIFICATIONS 6-11
6.4 PORTABLE AND VEHICLE-MOUNTED GENERATORS 6-11
6.5 BATTERIES 6-11
6.5.1 SURROUNDING SPACE 6-12

6.5.2 LOCATION 6-12
6.5.3 VENTILATION 6-12
6.5.4 CONDUIT 6-12
6.5.5 BATTERY ROOM 6-13
6.5.6 PERSONAL PROTECTIVE EQUIPMENT 6-13
6.5.7 TOOLS 6-13
6.5.8 STORAGE BATTERIES AND BATTERY BANKS 6-13
6.5.8.1 TYPES OF HAZARDS 6-14
6.5.8.2 DESIGN AND CONSTRUCTION CRITERIA 6-14
6.5.8.3 OPERATING CRITERIA 6-14
7.0 WORK IN EXCESS OF 600 VOLTS 7-1
7.1 RESPONSIBILITIES FOR SAFETY 7-1
7.1.1 WORKERS 7-1
7.1.2 SUPERVISORS 7-2
7.2 TRAINING 7-3
7.2.1 EMPLOYEE TRAINING 7-3
7.2.2 QUALIFIED EMPLOYEE TRAINING 7-3
7.3 JOB BRIEFINGS 7-3
7.4 PERSONAL PROTECTIVE EQUIPMENT AND PROTECTIVE CLOTHING 7-4
7.4.1 SHOES 7-4
7.4.2 SAFETY HAT 7-4
7.4.3 EYE PROTECTORS 7-5
7.4.5 METAL FASTENERS 7-5
7.4.6 WORK GLOVES 7-5
7.4.7 WORK CLOTHES 7-5
7.4.8 FIRE RESISTANT CLOTHING 7-5
7.4.8.1 GENERAL 7-5
7.4.8.2 ELECTRIC ARC HAZARDS 7-5
7.4.8.3 TYPES OF FIRE RESISTANT FABRICS 7-6
7.4.8.4 CLOTHING SYSTEMS 7-6
7.4.9 RUBBER GLOVES 7-6
7.4.10 RUBBER LINE HOSE, HOODS, COVERS, SLEEVES, AND BLANKETS 7-7
7.4.11 LIVE LINE TOOLS 7-7
7.4.12 STOREROOM STORAGE 7-7
7.4.13 TRUCK STORAGE 7-7
7.4.14 PLACING OF INSULATING GOODS ON CONDUCTORS 7-8
7.4.15 REMOVING INSULATING GOODS FROM CONDUCTORS 7-8

7.4.16 CLEANING AND INSPECTING 7-8
7.5 PROTECTIVE GROUNDING OF LINES AND EQUIPMENT 7-8
7.5.1 PURPOSE 7-8
7.5.1.1 REDUCE THE POTENTIAL VOLTAGE DIFFERENCES ACROSS THE WORKER 7-9
7.5.2 APPLICATION 7-9
7.5.2.1 DEENERGIZED LINES 7-9
7.5.2.2 NEW CONSTRUCTION OR DISMANTLING OF FACILITIES 7-10
7.5.2.3 MINIMUM APPROACH DISTANCE FROM UNGROUNDED CONDUCTORS 7-10
7.5.2.4 VISIBLE THREE-PHASE SHORT AND GROUND REQUIRED 7-10
7.5.2.5 GROUND CIRCUIT 7-10
7.5.3 GROUNDING EQUIPMENT 7-11
7.5.3.1 AVAILABILITY 7-11
7.5.3.2 APPROVED CAPACITY 7-11
7.5.3.3 GROUNDING CABLES AND HARDWARE 7-11
7.5.3.4 GROUNDING CABLES 7-11
7.5.3.4.1 STRANDING 7-11
7.5.3.4.2 JACKETS 7-11
7.5.3.4.3 FERRULES 7-12
7.5.3.4.4 HANDLING OF GROUNDING CABLE 7-12
7.5.3.4.5 SIZE OF GROUNDING CABLE 7-12
7.5.3.4.6 GROUNDING CABLE LENGTH 7-12
7.5.3.4.7 GROUNDING CLAMPS 7-12
7.5.3.4.7.1 CLAMP TYPES 7-12
7.5.3.4.7.2 CLAMP JAWS 7-13
7.5.3.4.8 GROUNDING CLUSTER BARS 7-13
7.5.3.4.9 TEMPORARY GROUND RODS 7-13
7.5.4 TESTING BEFORE INSTALLING GROUNDS 7-14
7.5.5 ATTACHING AND REMOVING GROUNDS 7-14
7.5.6.1 WORK LOCATION 7-14
7.5.6.3 OTHER LOCATIONS 7-15
7.5.7 TESTING WITHOUT GROUNDS 7-15
7.5.8 GROUND PERSONNEL 7-15
7.6 INSTALLING OR REMOVING CONDUCTORS 7-15
7.6.2 STRINGING OR REMOVING DEENERGIZED CONDUCTORS 7-16
7.6.3 STRINGING ADJACENT TO ENERGIZED LINES 7-17
7.7 SPECIAL TOOLS 7-18
7.7.1 LINEWORKER'S CLIMBING TOOLS 7-18

7.7.2 BODY BELTS AND SAFETY STRAPS 7-18
7.7.3 TOOL BAG AND EQUIPMENT 7-19
7.7.4 TAPES AND RULERS 7-19
7.7.5 SPOON AND SHOVELS 7-19
7.7.6 PIKE POLES 7-20
7.7.7 HAND AXES AND SHARP TOOLS 7-20
7.7.8 HANDLINES AND TAGLINES 7-20
7.8 TREE TRIMMING 7-20
7.8.1 CARE AND USE OF TOOLS 7-20
7.8.2 CLIMBING 7-20
7.9 SERIES STREET-LIGHTING CIRCUITS AND APPARATUS 7-21
7.10 UNDERGROUND 7-21
7.10.1 WORKING IN MANHOLES, UTILITY TUNNELS, AND VAULTS 7-21
7.10.2 WORKING ON ENERGIZED UNDERGROUND CABLES 7-23
7.10.3 TERMINALS OF UNDERGROUND CABLES (POTHEADS) 7-23
7.11 FERRO-RESONANCE 7-23
8.0 TEMPORARY WIRING 8-1
8.1 REQUIREMENTS AND INSTALLATION CONDITIONS OF USE 8-1
8.1.1 CONTACT PREVENTION 8-1
8.1.2 VERTICAL CLEARANCES 8-1
8.1.3 WET LOCATIONS 8-1
8.1.4 SUPPORTS 8-1
8.1.5 CONDUIT 8-2
8.1.6 LIGHTING 8-2
8.1.7 CONFINED SPACES 8-2
8.1.8 EXPOSED SOCKETS AND BROKEN BULBS 8-2
8.1.9 GROUND FAULT PROTECTION FOR PERSONNEL 8-2
8.1.10 WIRING METHODS 8-2
8.1.10.1 SERVICE CONDUCTORS 8-3
8.1.10.2 FEEDER CONDUCTORS 8-3
8.1.10.3 BRANCH CIRCUIT CONDUCTORS 8-3
8.1.10.4 NONMETALLIC SHEATHED CABLE 8-3
8.2 USING ASSURED EQUIPMENT GROUNDING CONDUCTOR PROGRAM 8-3
8.3 PORTABLE ELECTRICAL TOOLS AND EQUIPMENT 8-5
8.3.1 INSPECTION AND MAINTENANCE 8-6
8.3.2 CONDITIONS OF USE 8-6
8.3.3 USE OF EXTENSION CORDS 8-6

8.3.4 DOUBLE INSULATED TOOLS 8-7
9.0 ENCLOSED ELECTRICAL/ELECTRONIC EQUIPMENT 9-1
9.1 PURPOSE 9-1
9.2 SCOPE 9-1
9.3 GROUNDING AND BONDING 9-1
9.3.1 OBJECTIONAL CURRENT OVER GROUNDING CONDUCTORS 9-1
9.3.2 EQUIPMENT GROUNDING CONDUCTOR 9-2
9.3.3 ENCLOSURE GROUNDING AND BONDING 9-3
9.3.4 SPECIAL CONSIDERATIONS 9-5
9.4 RACK POWER DISTRIBUTION 9-6
9.4.1 GENERAL REQUIREMENTS APPLYING TO ALL AC POWER EQUIPMENT WITHIN OR ATTACHED TO INSTRUMENT RACKS 9-6
9.4.1.1 LOADS 9-6
9.4.1.2 OTHER GENERAL EQUIPMENT REQUIREMENTS 9-6
9.4.2 CONDUCTORS AND CABLES SPECIFIC REQUIREMENTS. 9-6
9.4.2.1 FLEXIBLE CABLES 9-7
9.4.2.2 STRAIN RELIEF 9-7
9.4.2.3 SEPARATION OF VOLTAGES 9-7
9.4.2.4 OTHER CONCERNS 9-8
9.4.3 POWER SWITCHES AND INTERLOCK DEVICES SPECIFIC REQUIREMENTS 9-8
9.5 CHASSIS POWER DISTRIBUTION 9-8
9.5.1 AC POWER DISTRIBUTION 9-8
9.5.1.1 CHASSIS BONDING AND GROUNDING 9-8
9.5.1.2 CONNECTIONS, CONNECTORS, AND COUPLINGS 9-9
9.5.1.3 TERMINALS/LIVE PARTS 9-10
9.5.2 DC POWER DISTRIBUTION 9-10
9.6 PROTECTIVE DEVICES FOR ENCLOSED ELECTRICAL/ ELECTRONIC EQUIPMENT 9-10
9.6.1 SURGE ARRESTERS 9-10
9.6.2 FUSES 9-11
9.6.3 CIRCUIT BREAKERS 9-11
9.6.4 POWER INTERLOCK DEVICES 9-11
9.7 DISCONNECTING MEANS 9-11
9.7.1 GENERAL 9-12
9.7.2 EMERGENCY SHUTDOWN 9-12
9.7.3 SPECIAL CONSIDERATIONS 9-12
9.8 MARKING AND LABELING REQUIREMENTS 9-13
9.8.1 GENERAL MARKING REQUIREMENTS 9-13

9.8.2 HAZARD MARKING REQUIREMENTS 9-13
9.8.3 OTHER REQUIREMENTS 9-13
9.9 WORKING CLEARANCES 9-14
9.10 CABLE/UTILITY MANAGEMENT SYSTEM 9-14
9.10.1 USAGE WITH ENCLOSED ELECTRICAL/ELECTRONIC EQUIPMENT 9-14
9.10.2 REQUIREMENTS 9-15
9.11 ELECTRICAL SAFETY REQUIREMENTS FOR TESTER FACILITIES....9-17
9.11.1 AMPACITY OF FACILITY WIRING AND DISTRIBUTION EQUIPMENT....9-17
9.11.2 FACILITY GROUNDING AT TEMPORARY OR REMOTE SITES....9-17
9.11.3 FACILITY LIGHTNING PROTECTION....9-17
9.11.4 SURGE PROTECTION....9-17
9.12 ENCLOSED POWER ELECTRONICS 9-18
9.12.1 ENCLOSURES 9-18
9.12.2 COMPONENT CLEARANCES 9-18
9.12.3 INSTRUMENTATION....9-19
9.12.4 GENERAL 9-19
9.13 NON-IONIZING RADIATION 9-19
9.13.1 ELECTROMAGNETIC RADIATION 9-19
9.13.2 ELECTROMAGNETIC RADIATION THREAT TO ELECTROEXPLOSIVE DEVICES .9-20
10.0 RESEARCH & DEVELOPMENT 10-1
10.1 PURPOSE....10-1
10.2 SCOPE....10-1
10.3 COMPLIANCE WITH OSHA....10-1
10.4 STANDARDIZED SAFETY PRACTICES AND PROCEDURES 10-2
10.5 EQUIPMENT NOT LISTED BY A NATIONALLY RECOGNIZED TESTING LABORATORY .10-2
10.5.1 HAZARDS....10-2
10.5.2 DESIGN AND CONSTRUCTION....10-2
10.6 OPERATION AND MAINTENANCE 10-4
10.7 EMPLOYEE QUALIFICATIONS 10-4
10.7.1 HAZARDS....10-4
10.7.2 ADDITIONAL QUALIFICATIONS 10-4
10.8 GENERIC R&D EQUIPMENT....10-4
10.8.1 POWER SOURCES....10-4
10.8.1.1 HAZARDS....10-4
10.8.1.2 DESIGN AND CONSTRUCTION 10-5
10.8.1.3 OPERATION AND MAINTENANCE....10-5
10.8.2 CONDITIONS OF LOW VOLTAGE AND HIGH CURRENT....10-6

10.8.2.1 HAZARDS 10-6
10.8.2.2 DESIGN AND CONSTRUCTION 10-7
10.8.2.3 OPERATION AND MAINTENANCE 10-7
10.8.3 CONDITIONS OF HIGH VOLTAGE AND LOW CURRENT 10-7
10.8.3.1 HAZARDS 10-7
10.8.3.2 DESIGN CONSIDERATIONS 10-8
10.8.3.3 SAFETY PRACTICES 10-8
10.8.4 RADIO-FREQUENCY/ MICROWAVE RADIATION AND FIELDS 10-8
10.8.4.1 HAZARDS 10-8
10.8.4.2 DESIGN AND CONSTRUCTION 10-9
10.8.4.2.1 EXEMPTIONS TO RFMW EXPOSURE LIMITS 10-9
10.8.4.2.2 EXPOSURE CRITERIA FOR PULSED RFMW RADIATION 10-10
10.9 METHODS 10-11
10.9.1 WIRING METHODS 10-11
10.9.1.1 HAZARDS 10-11
10.9.1.2 DESIGN AND CONSTRUCTION 10-13
10.9.1.2.1 DESIGN AND CONSTRUCTION AS AN INTEGRAL PART OF EQUIPMENT 10-13
10.9.1.2.2 POWER SUPPLY INTERFACE BETWEEN UTILITY SYSTEMS AND R&D EQUIPMENT 10-13
10.9.1.3 OPERATION AND MAINTENANCE 10-14
10.9.2 UNCONVENTIONAL PRACTICES 10-14
10.9.2.1 GROUNDING 10-14
10.9.2.1.1 HAZARDS 10-14
10.9.2.1.2 DESIGN AND CONSTRUCTION 10-14
10.9.2.1.3 NOISE COUPLING MECHANISMS. 10-15
10.9.2.1.4 OPERATION AND MAINTENANCE 10-19
10.9.2.2 MATERIALS USED IN AN UNCONVENTIONAL MANNER 10-20
10.9.2.2.1 HAZARDS 10-20
10.9.2.2.2 DESIGN AND CONSTRUCTION 10-21
10.9.2.2.3 OPERATION AND MAINTENANCE 10-21
10.9.3 WORK ON ENERGIZED OR DE-ENERGIZED ELECTRICAL EQUIPMENT 10-22
10.10 REQUIREMENTS FOR SPECIFIC R&D EQUIPMENT 10-22
10.10.1 CAPACITORS 10-22
10.10.1.1 HAZARDS 10-22
10.10.1.2 DESIGN AND CONSTRUCTION 10-23
10.10.1.2.1 AUTOMATIC DISCHARGE DEVICES 10-23

10.10.1.2.2 SAFETY GROUNDING 10-24
10.10.1.2.3 GROUND HOOKS 10-24
10.10.1.2.4 DISCHARGE EQUIPMENT WITH STORED ENERGY IN EXCESS OF 10 JOULES 10-24
10.10.1.2.5 FUSING 10-25
10.10.1.3 OPERATION AND MAINTENANCE 10-25
10.10.2 INDUCTORS 10-26
10.10.2.1 HAZARDS 10-26
10.10.2.2 DESIGN AND CONSTRUCTION 10-26
10.10.2.3 OPERATION AND MAINTENANCE 10-27
10.10.3 ELECTRICAL CONDUCTORS AND CONNECTORS 10-27
10.10.3.1 HAZARDS 10-27
10.10.3.2 DESIGN AND CONSTRUCTION 10-28
10.10.3.3 OPERATION AND MAINTENANCE 10-28
10.10.4 INDUCTION AND DIELECTRIC HEATING EQUIPMENT 10-28
10.10.4.1 HAZARDS 10-28
10.10.4.2 DESIGN AND CONSTRUCTION 10-29
10.10.4.3 OPERATION AND MAINTENANCE 10-29
10.10.5 LASERS AND X-RAY EQUIPMENT 10-29
10.10.5.1 HAZARDS 10-29
11.0 ELECTRICAL SAFETY DURING EXCAVATIONS 11-1
11.1 GENERAL 11-1
11.2 REGULATIONS, CODES AND REFERENCES 11-1
11.3 UTILITIES IDENTIFICATION 11-1
11.3.1 CONFIGURATION MANAGEMENT 11-2
11.3.2.1 EXCAVATION PERMIT 11-2
11.4 UTILITIES VERIFICATION AND MARKING 11-2
11.4.1 FIELD LOCATION OF EXCAVATION BOUNDARIES 11-3
11.4.2 LOCATOR EQUIPMENT SELECTION AND LIMITATIONS 11-3
11.4.3 LOCATOR OPERATOR TRAINING 11-5
11.4.4 FIELD MARKING OF IDENTIFIED UTILITIES 11-5
11.5 UTILITIES DISPOSITION 11-6
11.5.1 OPERATING FACILITIES CONSIDERATIONS 11-6
11.6 WORK CONTROL DURING EXCAVATIONS 11-6
11.6.1 SAFETY EQUIPMENT AND PROCEDURES 11-6
11.7 THE EXCAVATION PROCESS 11-6
11.7.1 EXCAVATIONS IN CONCRETE WALLS AND SLABS 11-7

11.7.2 MACHINE OR HAND DIGGING 11-7
11.7.3 WORKER PROTECTION 11-7
11.8 AS-BUILT DRAWINGS 11-8
12.0 REFERENCES 12-1
APPENDIX A DOE MODEL ELECTRICAL SAFETY PROGRAM A-1
APPENDIX B ACRONYMS AND DEFINITIONS B-1
B.1 ACRONYMS B-1
B.2 DEFINITIONS B-3
DEFINITIONS APPLICABLE TO 29 CFR 1910 SUBPART S B-3
DEFINITIONS APPLICABLE TO 29 CFR 1910.269 ..... B-17
DEFINITIONS APPLICABLE TO 29 CFR 1926 SUBPART K B-22
DEFINITIONS APPLICABLE TO 29 CFR 1926 SUBPART V B-33
DEFINITIONS APPLICABLE TO SECTIONS 1 THROUGH 10 ..... B-37
APPENDIX C WORK MATRICES – EXAMPLES C-1
APPENDIX D REGULATION MATRICES D-1
CONCLUDING MATERIAL D-6

FOREWORD

1. This Department of Energy (DOE) Handbook is approved for use by the Office of Environment, Safety, and Health and is available to all DOE components and their contractors.

2. Specific comments (recommendations, additions, deletions, and any pertinent data) to enhance this document should be sent to:

   Patrick Tran
   EH-22/270 Corporate Center
   U.S. Department of Energy
   1000 Independence Ave. SW
   Washington DC 20585-0270

3. The DOE Electrical Safety Handbook replaces the DOE Electrical Safety Handbook that was originally issued in 1998. DOE handbooks are part of the DOE directives system and are issued to provide supplemental information regarding the Department's expectations for fulfilling its requirements as contained in rules, Orders, notices, and regulatory standards. The handbooks may also provide acceptable methods for implementing these requirements. Handbooks are not substitutes for requirements, nor do they replace technical standards that are used to describe established practices and procedures for implementing requirements.

4. This document contains DOE developed explanatory material in support of OSHA regulations and nationally recognized electrical safety related standards and other information. This document was revised to include electrical safety for enclosed electrical and electronic equipment, research and development, and the latest editions of 29CFR 1910 and 1926, National Electrical Code, National Electrical Safety Code, and National Fire Protection Association 70E as of 2004.

5. Topics that are being considered for future development and inclusion in the next update of this document are included in Appendix E.

1.0 INTRODUCTION

1.1 PURPOSE

Electrical Safety Handbook presents the Department of Energy (DOE) safety standards for DOE field offices or facilities involved in the use of electrical energy. It has been prepared to provide a uniform set of electrical safety guidance and information for DOE installations to effect a reduction or elimination of risks associated with the use of electrical energy. The objectives of this handbook are to enhance electrical safety awareness and mitigate electrical hazards to employees, the public, and the environment.

1.2 SCOPE

This handbook provides general information to enhance understanding of DOE Orders, national codes, national standards, local, state, and federal regulations. This handbook shall not supersede more stringent requirements in those applicable codes, standards, and regulations.

Each entity should reference its contract documents and determine what legal requirements are to be followed in the area of electrical safety. These requirements may vary from location to location. In this document, "shall" refers to requirements from regulatory standards such as OSHA and relevant DOE Orders that may or may not apply to your specific location. "Should " refers to guidance from consensus standards such as the National Electrical Code (NFPA 70), National Electrical Safety Code (NESC, ANSI C2), and Standard for Electrical Safety in the Workplace (NFPA 70E) which may or may not apply to your specific location (depending upon your contractual requirements). No section or portion of this document is intended to stand alone. Each section or portion interacts with others that are appropriate to support referenced material.

The design of new facilities shall conform to relevant DOE Orders and should conform to industry recognized engineering design standards. Existing facilities should evaluate their systems and operations in relation to this handbook, applicable DOE Orders, national codes, national standards, local, state, and federal regulations, to determine if they comply or if a safety problem exists. If the evaluation determines that a safety risk exists, corrective actions should be initiated to bring the systems or operations into compliance with current standards. In the case of a major renovation of an existing facility, the modification shall comply with current standards.

Existing facilities shall conform to relevant DOE Orders and should comply with the National Electrical Code (NFPA 70), National Electrical Safety Code (NESC, ANSI C2), and Standard for Electrical Safety in the Workplace (NFPA 70E). The OSHA standards have specific requirements that shall apply to all electrical installations and utilization equipment regardless of when they were designed or installed and identify other mandatory provisions and specify effective dates. Installations in compliance with the code at the time of design or installation (code of record), do not need to be upgraded to the updated code unless required to correct a known hazard or a major modification is being performed unless otherwise directed by OSHA.

This handbook is being provided to identify those DOE Orders, national codes, national standards, local, state, and federal regulations that will provide employees with guidance on requirements pertaining to electrical systems. It is the responsibility of each site to evaluate compliance with the above requirements.

1.3 AUTHORITY HAVING JURISDICTION (AHJ)

In states and municipalities, an official (electrical inspector, engineer, or equivalent qualified individual) is usually designated as the electrical Authority Having Jurisdiction (AHJ). The AHJ should possess such executive ability as is required for performance of the position, and should have thorough knowledge of standard materials and work practices used in the installation, operation, construction, and maintenance of electrical equipment. The AHJ should, through experience or education, be knowledgeable of the requirements contained in the OSHA standards, the National Electrical Code, the National Electrical Safety Code, DOE requirements, and other appropriate local, state, and national standards. The AHJ should be responsible to interpret codes, regulations and standards, and approve equipment, assemblies, or materials. If the AHJ needs to address items outside their electrical expertise, such as fire, confined space, fall protection, or like issues, the AHJ should consult with cognizant experts before a decision is reached. The AHJ may permit alternate methods where it is assured that equivalent objectives can be achieved by establishing and maintaining effective safety equal to or exceeding established codes, regulations, and standards.

In DOE, levels of authority exist that serve the function of the AHJ. The AHJ may be the contracting officer, such as an area manager. This person may choose to delegate authority to an individual or organization within his or her control. It is acceptable for DOE sites to delegate authority to a committee of subject matter expert. The authority may reside with a safety or facilities department. The field office manager or designated representative may act as a higher level of authority. The authority may begin with an electrician and proceed through various levels of supervision to management (as shown in Fig. 1-1).

DOE contractors should establish lines of authority within their organizations. It is important that a line of authority be established, documented, and recognized. The limits of the authority and recognition of higher authority should be delineated.

Fig. 1-1.

NOTE: The titles in Fig. 1-1 will vary from site to site.

2.0 GENERAL REQUIREMENTS

This section deals with the reliability and effective maintenance of electrical systems that can be achieved in part by careful planning and proper design. The training of personnel in safety-related work practices that pertain to their respective job assignments is outlined.

2.1 ELECTRICAL MAINTENANCE OR REPAIRS

Only qualified persons shall perform electrical repairs. It is dangerous for an unqualified worker to attempt electrical repair. Before any electrical maintenance or troubleshooting is performed, sources of electrical energy shall be deenergized, except where it is necessary for troubleshooting, testing, or areas that are infeasible to deenergize. All energy sources shall be brought to a safe state. For example, capacitors shall be discharged and high capacitance elements shall be short-circuited and grounded.

2.1.1 WORK ON ENERGIZED/DEENERGIZED ELECTRICAL EQUIPMENT

The first consideration for working on any electrical system is to have the circuit positively deenergized. All circuits and equipment must be considered energized until opened, tagged and/or locked according to an approved procedure and should be proven deenergized by testing with an approved testing device known to be in proper working order. NFPA 70E refers to this as an electrically safe work condition and defines it as: “a state in which the conductor or circuit part to be worked on or near has been disconnected from energized parts, locked/tagged in accordance with established standards, tested to ensure the absence of voltage, and grounded if determined necessary.” The electrical hazard controls identified in NFPA 70E are intended to protect a person from arc flash and shock hazards. Due to the explosive effects of some arc events, physical trauma injuries could occur. The PPE requirement identified in NFPA 70E against physical trauma other than exposure to the thermal effects of an arc flash.

2.1.2 CONSIDERATIONS FOR WORKING ON ENERGIZED SYSTEMS AND EQUIPMENT

Qualified employees performing such tasks as electrical repairs, modifications, and tests on energized electrical systems, parts, and equipment need to comply with the following:

1. Parts to which an employee might be exposed shall be put into an electrically safe work condition before the employee works on or near them, unless the employer can demonstrate that deenergizing introduces additional or increased hazards or is infeasible due to equipment design or operational limitations.

2. Personnel shall not work on energized circuits unless they are qualified to do so, or, for training purposes, unless they work under the direct supervision of a qualified person.

3. Sufficient protection in the form of insulated tools and insulated protective equipment, such as gloves, blankets, sleeves, mats, etc., shall be used while working on energized circuits. (See NFPA 70E)

4. Other work, independent of voltage, that presents a significant shock, arc flash, or arc blast hazard to employees.

Note: The discussion in #4 above assumes the system voltage is less than the maximum use voltage of the ASTM class of rubber goods used.

2.1.3. SAFETY WATCH RESPONSIBILITIES AND QUALIFICATIONS

The responsibilities and qualifications of personnel for sites that require the use of a safety watch are as follows:

1. Trained in cardiopulmonary resuscitation (CPR);

2. Thorough knowledge of the locations of emergency-shutdown push buttons and power disconnects in their operations;

3. Thorough knowledge of the specific working procedures to be followed and the work to be done;

4. Specific responsibilities include monitoring the work area for unsafe conditions or work practices and taking necessary action to ensure abatement of the unsafe condition or work practice, deenergizing equipment and alerting emergency-rescue personnel as conditions warrant, maintaining visual and audible contact with personnel performing the work, and removal of injured personnel, if possible; and

5. The safety watch should have no other duties that preclude observing and rendering aid if necessary.

2.2 BASIC SAFEGUARDS

To protect employees from some of the electrical hazards at industrial sites, Federal regulations limit the performance of electrical work to qualified and competent personnel. Specifically, the law requires that only a qualified person or someone working under the direct supervision of a qualified person may perform any repair, installation, or testing of electrical equipment. See Section 2.8 and the definitions of "Qualified Employee" or "Qualified Person" in Appendix B.

One of the best ways to prevent electrical accidents at industrial sites is to be aware of electrical dangers in the workplace. Once hazards have been identified, they must be pointed out and proper steps taken by a qualified person.

The following, where used, will improve the safety of the workplace:

1. Maintain good housekeeping and cleanliness.

2. Identify and diminish potential hazards.

3. Anticipate problems.

4. Resist pressure to "hurry up."

5. Plan and analyze for safety in each step of a project.

6. Document work.

7. Use properly rated test equipment and verify its condition and operation before and after use.

8. Know and practice applicable emergency procedures.

9. Become qualified in cardiopulmonary resuscitation (CPR) and first aid and maintain current certifications.

10. Wear appropriate personal protective equipment (PPE).

11. Refer to system drawings and perform system walkdowns.

12. Electrical equipment should be maintained in accordance with the manufactures instructions.

2.3 RESPONSIBILITIES

Management is responsible to provide a workplace that is free from recognized hazards that might cause injury, illness, or death and to comply with the specific safety and health standards issued by Federal, state, and local authorities, especially the Occupational Safety and Health Administration (OSHA). Management expects all of its employees to comply with these regulations as well as the DOE requirements formulated for the health and safety of employees. Prevention of injury and illness requires the efforts of all and is a goal well worth achieving.

2.3.1 MANAGEMENT RESPONSIBILITIES

To ensure safety and protection of employees, management has the following responsibilities:

1. Ensure that employees are provided a workplace that is free from recognized hazards.

2. Ensure that employees performing electrical work are trained and qualified (see Section 2.8).

3. Ensure that approved, maintained, and tested personal protective equipment and clothing is provided, available, and used properly.

4. Establish, implement, and maintain procedures and practices that will ensure safe conduct of electrical work.

5. Keep and maintain records as required.

2.3.2 EMPLOYEE RESPONSIBILITIES

Employees are responsible to comply with occupational safety and health regulations and standards that apply to their own actions and conduct, including immediate reporting to management of unsafe and unhealthful conditions.

2.4 REVIEWS/INSPECTIONS

All modifications to existing facility and projects and new facilities should be subject to inspection by the authority having jurisdiction or their authorized designee to verify compliance

with the codes and standards in effect on the date that such work was approved by a final design review. If the installation involves a hazard to life, equipment, or property, current standards and codes should be used to mitigate the hazard.

According to OSHA, all major replacements, modifications, repairs, or rehabilitation performed after March 15, 1972, on electrical systems and equipment installed before March 15,1972, are required to comply with all the requirements of 29 CFR 1910.302 to 1910.308. OSHA considers major replacements, modifications, or rehabilitation to be work similar to that involved when a new building or facility is built, a new addition is built, or an entire floor is renovated.

2.5 APPROVAL OF ELECTRICAL EQUIPMENT

All electrical equipment, components, and conductors shall be approved for their intended uses.

If any electrical system component is of a kind that any NRTL accepts, certifies, lists, or labels, then only NRTL accepted, certified, listed, or labeled components can be used. A nonlisted, nonlabeled, noncertified component may be used if it is of a kind that no NRTL covers, and then it shall be tested or inspected by the local authority responsible for enforcing the Code. For example, this would apply to custom made equipment. The custom made equipment should be built in accordance with a design approved by the AHJ.

See 29 CFR 1910.399 for definitions relating to OSHA requirements for accepting electrical equipment and wiring methods that are not approved by an NRTL.

2.6 CODES, STANDARDS, AND REGULATIONS

Workers who perform electrical or electronic work, where applicable, shall comply with relevant DOE Orders that may identify the following codes and standards.

1. Standards published by the National Fire Protection. Association (NFPA)
2. National Electrical Safety Code, ANSI C2.
3. All relevant state and local requirements.
4. Components or installations in aircraft, water craft, and railroads are exempt from the above approval requirements.

The standards and performance specifications from the following organizations are recommended and should be observed when applicable:

1. Institute of Electrical and Electronics Engineers (IEEE)
2. National Electrical Manufacturers Association (NEMA)
3. American National Standards Institute (ANSI)
4. American Society for Testing and Materials (ASTM)
5. National Fire Protection Association (NFPA)

6. Underwriters Laboratory, Inc. (UL)

7. Factory Mutual Engineering Corporation (FMEC)

8. Other Nationally Recognized Testing Laboratories recognized by OSHA on a limited basis.

Where no clear applicable code or standard provides adequate guidance or when questions regarding workmanship, judgment, or conflicting criteria arise, personnel safety protection shall be the primary consideration. Therefore, where there are conflicts between the mandatory requirements of the above codes, standards, and regulations, the requirements that address the particular hazard and provide the greater safety shall govern.

2.7 GROUND FAULT CIRCUIT INTERRUPTERS

There are 2 classes of ground-fault circuit interrupters and each class has a distinct function. A Class A ground-fault circuit interrupter trips when the current to ground has a value in the range of 4 through 6 milliamperes and is used for personnel protection. A Class A ground-fault circuit interrupter is suitable for use in branch circuits. A Class B ground-fault circuit interrupter (commonly used as ground fault protection for equipment) trips when the current to ground exceeds 20 milliamperes. A Class B GFCI is not suitable for employee protection.

Ground-fault circuit protection can be used in any location, circuit, or occupancy to provide additional protection from line-to-ground shock hazards because of the use of electric hand tools. There are four types of GFCIs used in the industry:

1. Circuit breaker type

2. Receptacle type

3. Portable type

4. Permanently mounted type

The condition of use determines the type of GFCI selected. For example, if an electrician or maintenance person plugs an extension cord into a nonprotected GFCI receptacle, the easiest way to provide GFCI protection is to utilize a portable-type GFCI.

2.7.1 HOW A GFCI WORKS

See Section 4.14 for ground-fault protection of equipment. GFCIs are devices that sense when current-even a small amount-passes to ground through any path other than the proper conductor. When this condition exists, the GFCI quickly opens the circuit, stopping all current flow to the circuit and to a person receiving the ground-fault shock.

Figure 2-1 shows a typical circuit arrangement of a GFCI designed to protect personnel. The incoming two-wire circuit is connected to a two-pole, shunt-trip overload circuit breaker. The loadside conductors pass through a differential coil onto the outgoing circuit. As long as the current in both load wires is within specified tolerances, the circuit functions normally. If one of the conductors comes in contact with a grounded condition or passes through a person's body to ground, an unbalanced current is established. This unbalanced current is picked up by the

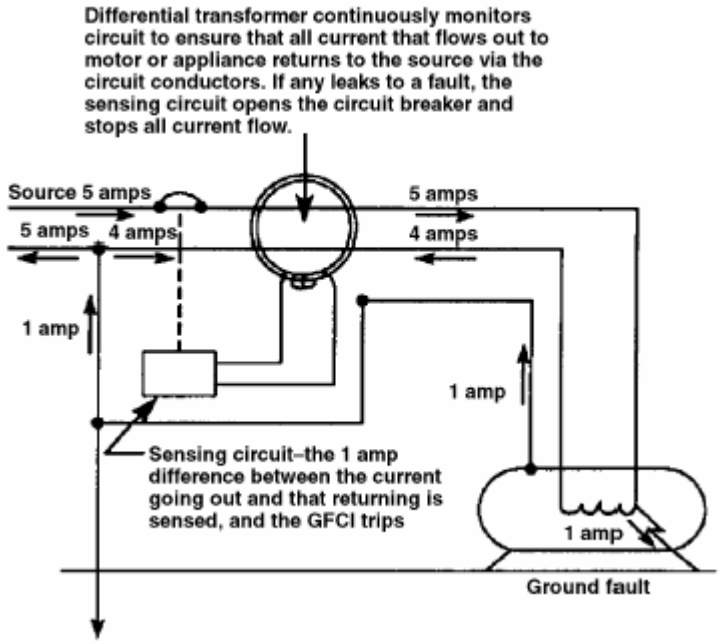

NEC Section 527

Figure 2-1. GFCI-protected circuits is one way of providing protection of personnel using electric hand tools on construction sites or other locations.

differential transformer, and a current is established through the sensing circuit to energize the shunt trip of the overload circuit breaker and quickly open the main circuit. A fuse or circuit breaker cannot provide this kind of protection. The fuse or circuit breaker will trip or open the circuit only if a line-to-line or line-to-ground fault occurs that is greater than the circuit protection device rating.

Differential transformer continuously monitors circuit to ensure that all current that flows out to motor or appliance returns to the source via the circuit conductors. If any leaks to a fault, the sensing circuit opens the circuit breaker and stops all current flow.

Sensing circuit-the 1 amp difference between the current going out and that returning is sensed, and the GFCI trips

A GFCI will not protect the user from line-to-line or line-to-neutral contact hazards. For example, an employee is using a double insulated drill with a metal chuck and drill bit protected by a GFCI device. If the employee drills into an energized conductor and contacts the metal chuck or drill bit, the GFCI device will not trip (unless it is the circuit the GFCI device is connected to) as it will not detect a current imbalance.

2.7.2 USES

The use of GFCIs in branch circuits for other than dwelling units is defined in the NFPA 70E, Article 410.4.

Ground-fault protection for personnel shall be provided for temporary wiring installations utilized to supply temporary power to equipment used by personnel during construction, remodeling, maintenance, repair or demolition activities.

For temporary wiring installations;

a) All 120-V, single-phase, 15-, 20-, and 30-A receptacle outlets that are or are not a part of the permanent wiring of the building or structure and that are in use by employees shall have GFCI protection for personnel.

b) GFCI protection or an assured equipment grounding program (See Section 8.2) for all other receptacles shall be used to protect against electrical shocks and hazards.

Portable GFCIs shall be trip tested according to the manufacturers' instructions.

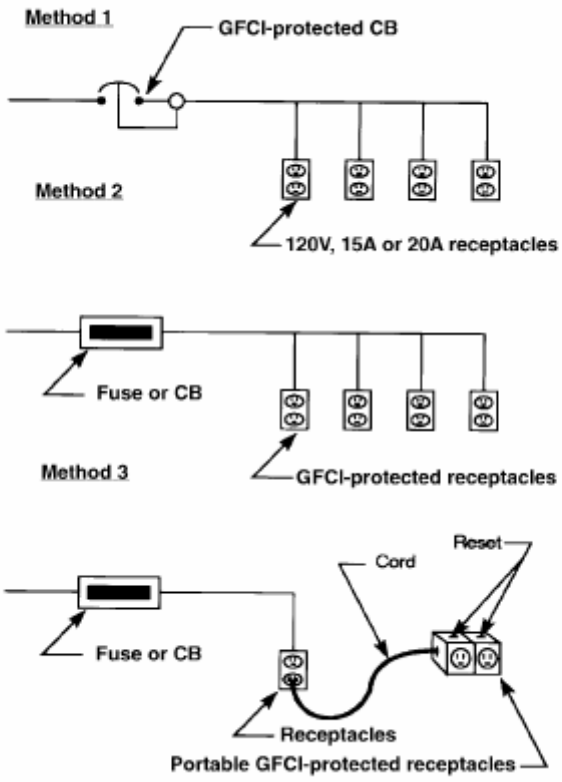

NEC Section 527

Figure 2-2. There are three methods of providing GFCI protection for construction sites.

2.8 TRAINING AND QUALIFICATIONS OF QUALIFIED WORKERS

Only qualified workers shall perform work on electrical systems. It is dangerous for unqualified personnel to attempt to do electrical work. There should be an employee training program implemented to qualify workers in the safety-related work practices that pertain to their respective job assignments.

2.8.1 FORMAL TRAINING AND QUALIFICATIONS

Management should establish formal training and qualifications for qualified workers before they are permitted to perform electrical work. Refresher training is recommended at intervals not to exceed three years to provide an update on new regulations and electrical safety criteria.

The training shall be on-the-job and/or classroom type. The degree of training provided shall be determined by the risk to the employee. This training shall be documented. Qualified employees shall be trained and familiar with, but not be limited to, the following:

1. Safety-related work practices, including proper selection and use of PPE, that pertain to their respective job assignments.

2. Skills and techniques necessary to distinguish exposed live parts from other parts of electrical equipment.

3. Skills and techniques necessary to determine the nominal voltage of exposed live parts, clearance distances, and the corresponding voltages to which the qualified person will be exposed.

4. Procedures on how to perform their jobs safely and properly.

5. How to lockout/tagout energized electrical circuits and equipment safely.

Other types of training recommended for electrical workers include the following:

a. National Electrical Code (NFPA 70)

b. National Electrical Safety Code (ANSI C2)

c. Use of personal protective grounds

d. Use of testing and measuring equipment

e. Work permit and work authorization procedures

f. Use and care of personal protective equipment

g. Proper clothing required for arc flash or arc blast protection

h. First aid and CPR Refresher training is recommended at intervals not to exceed 3 years

29 CFR 1910.269(a) and 1910.332 also require training for persons other than qualified workers, if job assignments bring them close enough to exposed parts of electrical circuits operating at 50 V or more to ground for a hazard to exist.

2.8.2 TRAINING OF SAFETY PERSONNEL

Safety personnel designated to support electrical safety programs should be knowledgeable and trained at levels commensurate with their duties.

2.9 WORKING SPACE AROUND ELECTRICAL EQUIPMENT

Working space around electrical enclosures or equipment shall be adequate for conducting all anticipated maintenance and operations safely, including sufficient space to ensure safety of personnel working during emergency conditions and workers rescuing injured personnel. Spacing shall provide the dimensional clearance (discussed in the following subsections) for personnel access to equipment likely to require examination, adjustment, servicing, or maintenance while energized. Such equipment include panelboards, switches, circuit breakers, switchgear, controllers, and controls on heating and air conditioning equipment.

These clearances shall be in accordance with NESC and NEC. These working clearances are not required if the equipment is not likely to require examination, adjustment, servicing, or maintenance while energized. However, sufficient access and working space is still required.

2.9.1 ELECTRICAL EQUIPMENT RATED AT 600 VOLTS OR LESS

A minimum working space 30 in. wide shall be provided in front of electrical equipment rated at 600 V or less. This provides room to avoid body contact with grounded parts while working with energized components of the equipment. The 30-in.-wide space may be centered in front of the equipment or can be offset. The depth of the working space shall be clear to the floor. Where rear access is required to work on deenergized parts, a minimum of 30 inches shall be provided. There shall be clearance in the work area to allow at least a 90-degree opening of equipment doors or hinged panels on the service equipment. Working spaces may overlap. The depth of the working space shall be 3 ft, 3 1/2 ft, or 4 ft, depending upon existing conditions. The conditions are as follows:

Condition 1: These are exposed live components on one side of a space and ungrounded parts on the other side.

Condition 2: The electrical equipment is mounted or set on one wall, and the wall on the opposite side is grounded. If the qualified worker should accidentally contact the conductive wall while touching live components, a circuit would be completed to ground and a fatal shock might occur.

Condition 3: The electrical equipment is mounted or set on one wall, and additional electrical equipment is mounted or set on the opposite side of the room. There are live components on both sides of the room. The qualified worker might accidentally make contact with live components and be in series with a hot phase and the grounded metal of the electrical equipment, which could produce a fatal shock.

See Figure 2-3 for the clearance requirements in front of electrical equipment rated 600 V or less.

2.9.2 ELECTRICAL EQUIPMENT RATED OVER 600 VOLTS

The NEC list the minimum clearance required for working spaces in front of high-voltage electrical equipment such as switchboards, control panels, switches, circuit breakers, switchgear, motor controllers, etc.

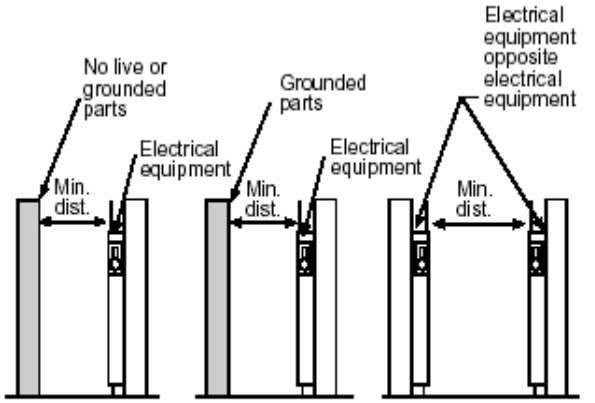

Condition 1		Condition 2		Condition 3	
Volts to ground	Min. dist.	Volts to ground	Min. dist.	Volts to ground	Min. dist.
0 - 150 V	3 ft.	0 - 150 V	3 ft.	0 - 150 V	3 ft.
151 - 600 V	3 ft.	151 - 600 V	3 1/2 ft.	151 - 600 V	4 ft.

L93 0350

NEC Table 110-26(A)(1)

Figure 2-3. Minimum clearances in front of electrical equipment (600 V or less).

There are three conditions to apply

1. Where there are exposed live components on one side of a space and no live or ungrounded parts on the other side.

2. Where there are exposed live components on one side and grounded parts on the other such as concrete, brick, and tile walls that are considered to be grounded parts.

3. Where there are exposed live components on both sides.

See Figure 2-4 for the clearance requirements in front of electrical equipment rated at over 600 V. See NEC for clearance requirements in the rear of electrical equipment.

2.10 IDENTIFICATION OF DISCONNECTION MEANS

Switches in service panels, subpanels, or elsewhere shall be marked to show what loads or equipment are supplied.

2.10.1 DISCONNECTING MEANS

All disconnecting means (switches or circuit breakers) shall be located for easy access and shall be clearly and permanently marked to show the purposes of the disconnects, unless located and arranged so that the purpose is evident. Labeling should match and be traceable to appropriate drawings. This applies to all existing electrical systems and all new, modernized, expanded, or altered electrical systems. Disconnecting means shall be capable of being locked out where required.

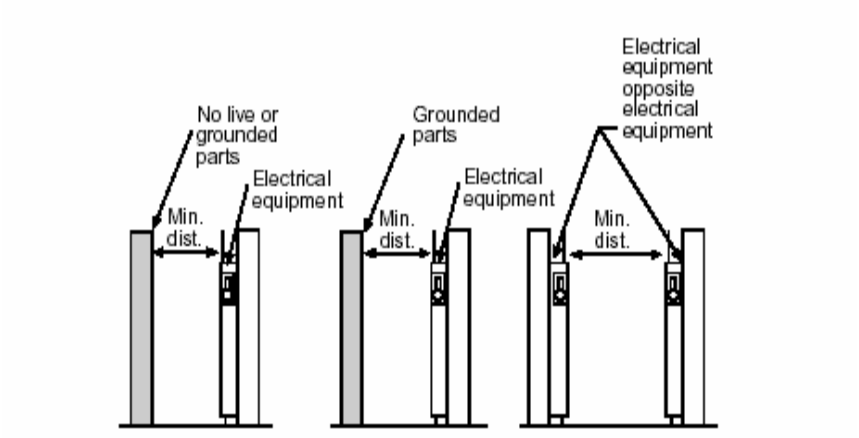

Condition 1		Condition 2		Condition 3	
Volts to ground	Min. dist.	Volts to ground	Min. dist.	Volts to ground	Min. dist.
601 - 2,500 V	3 ft.	601 - 2,500 V	4 ft.	601 - 2,500 V	5 ft.
2,501 - 9,000 V	4 ft.	2,501 - 9,000 V	5 ft.	2,501 - 9,000 V	6 ft.
9,001 - 25,000 V	5 ft.	9,001 - 25,000 V	6 ft.	9,001 - 25,000 V	9 ft.
25,001 - 75,000 V	6 ft.	25,001 - 75,000 V	8 ft.	25,001 - 75,000 V	10 ft.
above 75,000 V	8 ft.	above 75,000 V	10 ft.	above 75,000 V	12 ft.

L93 0349

NEC Table 110 34(A)

Figure 2-4. Minimum clearances in front of electrical equipment (over 600 V).

2.10.2 PANELBOARD CIRCUIT DIRECTORIES

Panelboard circuit directories shall be provided and fully and clearly filled out.

2.10.3 ENCLOSURE LABELING

Printed labeling or embossed identification plates affixed to enclosures shall comply with the requirements that disconnects be "legibly marked" and that the "marking shall be of sufficient durability" for the environment involved.

2.10.4 LOAD LABELING

As with the disconnecting device, the load should be labeled. For example, the motor, the controller, and the disconnecting device could have the same identification number, etc.

2.10.5 SOURCE LABELING

The source supplying power to the disconnecting means and load should be labeled as well. This requirement allows the electrical worker to know the identification of the elements from the source of power through the entire circuit. (See Figure 2-5.)

2.11 WORK INSTRUCTIONS

Before work begins, the qualified worker should ensure that the job to be done is in compliance with instructions pertaining to the electrical work.

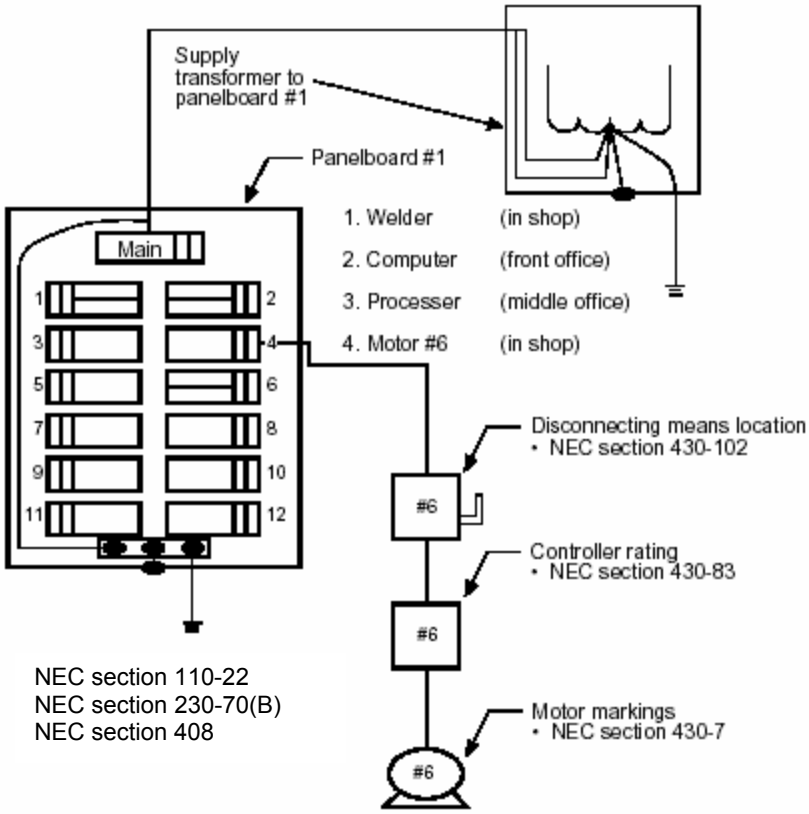

Figure 2-5. Switchgear, panelboards, motor control centers, etc., should identify the loads and elements which they supply.

2.11.1 SAFE WORK INSTRUCTIONS AND SUPERVISION

Electrical work should be performed according to written safety procedures and approved electrical safety manuals. Electrical work should be directed by a supervisor, qualified by training and experience in the safety-related work practices that pertain to their respective job assignments and those of their employees.

Workers should report any electrical hazards to their immediate supervisor. The supervisor should take all corrective actions necessary to address an employee's concerns.

Electrical instructions should be based on a thorough analysis of the job and its hazards. If the same task is repeated, it may be performed under specific work rules that are based on such analyses.

2.11.2 WORK INSTRUCTIONS

If no specific instruction is available and the job is beyond the scope of written work rules, the supervisor should issue instructions pertaining to the job to be performed. The instructions should contain the essential safety rules for the job and, when documented, should be signed by the employee, a line supervisor and/or safety representative.

2.11.3 WORK PLANNING

Electrical instructions may include, but not be limited to, the following:

1. Deenergizing circuits, if possible, and a means to prevent reenergization (lockout/tagout)
2. Grounding conductors and all possible conducting parts
3. Controlling associated generating equipment
4. Testing of equipment to ensure safe conditions
5. Provision of rubber-insulated protective equipment rated for the highest voltage present
6. Qualified personnel (see 2.1.2 and 2.1.3)
7. Personal protective equipment and protective clothing (e.g., hard hats, safety shoes, eye/face protection, insulated live-line tools, hot sticks, cotton or fire resistant clothing, and arc protection)
8. Working on experimental equipment.

2.12 ELECTRICAL PERSONAL PROTECTIVE EQUIPMENT (PPE)

Qualified workers are responsible for avoiding and preventing accidents while performing electrical work, repairs, or troubleshooting electrical equipment. Personnel shall wear or use personal protective equipment (PPE), and protective clothing that is appropriate for safe performance of work.

2.12.1 MANAGEMENT'S RESPONSIBILITIES

Management shall ensure that appropriate PPE is provided and ensure that employees using PPE are trained in their proper use. Furthermore, management shall ensure that employees use the PPE appropriate for their assigned task.

2.12.2 INSPECTING PPE

Employees shall visually inspect rubber-insulated PPE at the beginning of each workday prior to use and after any work performed that could damage the equipment. Such inspections shall include a field air test of the gloves used. Visual inspection shall be performed on hot sticks, grounds, aerial lift equipment and booms, rope, ladders, insulated tools, etc. Equipment that does not successfully pass visual inspection shall not be used and shall be returned for repair and testing or disposal.

2.12.3 CLEANING AND ELECTRICAL TESTING OF PPE

Rubber-insulated PPE issued for use shall receive periodic cleaning and electrical testing in accordance with the requirements of the appropriate ANSI/ASTM standards listed in the references of this handbook. The intervals of retest for rubber goods issued for service shall not be more than 6 months for gloves and 12 months for sleeves and blankets. Gloves or sleeves

that have been electrically tested but not issued for service shall not be placed into service unless they have been electrically tested within the previous twelve months.

2.12.3.1 TESTING

All testing methods, apparatus, and facilities for such testing shall meet the applicable ANSI/ASTM Standard. The method used and the results of such tests shall be documented and made available for inspection.

2.12.3.2 TESTING APPARATUS

Testing apparatus shall be operated and maintained by personnel trained for such work. Calibration schedules and procedures for calibrating testing apparatus are recommended to be in accordance with ANSI C39.1.

2.12.3.3 RETESTED PPE

Retested rubber-insulated PPE shall be identified to indicate the date of the latest test or date of retest in accordance with the appropriate standard. Manufacturer's recommendations on the type of paint or ink to be used shall be followed.

2.12.4 LIVE-LINE TOOLS

Live-line tools shall be cleaned and inspected before use and receive a dielectric test whenever their insulating value is suspect. A record of the testing of live-line tools shall be maintained.

2.12.4.1 FIBERGLASS-HANDLED TOOLS

Fiberglass-handled tools shall be tested by the manufacturer at 100 kV per ft of length. The in-service test shall be 75 kV per ft.

2.12.4.2 WOODEN-HANDLED TOOLS

Wooden-handled tools shall be tested by the manufacturer to 75 kV per ft of length. The in-service test shall be 50 kV per ft.

2.12.5 MAXIMUM USAGE VOLTAGE

Maximum usage voltage phase-to-phase or phase-to-ground for insulating blankets, mats, covers, line hose, sleeves, and gloves shall be as follows:

Class	Voltage	Label Color
00	500	Beige
0	1,000	Red
1	7,500	White
2	17,500	Yellow
3	26,500	Green
4	36,000	Orange

2.12.6 MAXIMUM USAGE VOLTAGE FOR LIVE-LINE TOOLS

Maximum usage voltage per foot of length and phase-to-phase or phase-to-ground for live-line tools shall be as follows:

1. Tools with wooden handles69 kV

2. Tools with fiberglass handles 93 kV

2.12.7 RUBBER-INSULATED GLOVES

Whenever rubber-insulated protective gloves are required, approved protective gloves shall also be worn (See Appendix C) for those conditions where rubber-insulated protective glove can be used without protectors.

2.12.8 STORAGE

Electrical insulating and protective clothing and equipment should be stored flat, undistorted, right side out, and unfolded, as appropriate in protective containers. Blankets may be stored rolled provided the inner diameter of the roll is at least 2 in.

Rubber goods shall be stored in a location as cool, dark, and dry as possible. The location shall be as free as practicable from ozone, chemicals, oils, solvents, damaging vapors and fumes, and away from electrical discharges and sunlight. Rubber gloves should be stored cuff down in a bag, box, or container that is designed for rubber glove storage. Rubber gloves may be kept inside of leather protectors.

2.12.9 SAFETY SHOES, HATS, AND GLASSES

Safety shoes, hard hats, and safety glasses worn by electrical workers shall meet the requirements of ANSI Z41, ANSI Z89.1, and ANSI Z87.1 specifications, respectively.

2.13 WORK PRACTICES

Chapter 1 of NFPA 70E, *Safety Related Work Practices* covers electrical safety-related work practices and procedures for qualified and unqualified employees who work on or near exposed energized electrical conductors or circuit parts in workplaces. This information provides a foundation for establishing an electrically safe working environment. NFPA 70E has embedded four basic strategies in the document. These strategies are:

1. establish an electrically safe work condition,

2. training,

3. planning the work, and

4. personal protective equipment.

NFPA 70E is updated on a three-year cycle in compliance with ANSI requirements. This schedule allows for the latest acceptable technology and experience to be integrated into the document.

2.13.1 TRAINING

Qualified workers shall be knowledgeable and trained in safety-related work practices, safety procedures, and other requirements that pertain to their respective job assignments. Employees shall not be permitted to work in an area where they are likely to encounter an electrical hazard unless they have been trained to recognize and avoid these hazards. (See Section 2.8.)

2.13.1.1 LIVE PARTS

Live parts that an employee may be exposed to shall be deenergized before the employee works on or near them, unless it can be demonstrated that deenergizing introduces additional or increased hazards or is infeasible because of equipment design or operational limitations. (See Section 2.1.1.)

Live parts that operate at less than 50 volts to ground need not be deenergized if there will be no increased exposure to electrical burns or to explosion due to electrical arcs.

2.13.1.2 SAFE PROCEDURE

Safe procedures for deenergizing circuits and equipment shall be determined before circuits or equipment are deenergized. The deenergization procedures shall be included in the lockout/tagout procedure for the circuit or equipment to be deenergized.

2.13.1.3 CIRCUITS AND EQUIPMENT

Circuits and equipment to be worked on shall be disconnected from all electric energy sources. Control circuit devices such as push-buttons, selector switches, and interlocks shall not be used as the sole means for deenergizing circuits or equipment.

2.13.1.4 STORED ELECTRICAL ENERGY

Stored electrical energy that might endanger personnel shall be placed in a safe state. Capacitors shall be discharged and high-capacitance elements shall be short-circuited and grounded if the stored electrical energy could endanger personnel.

2.13.1.5 STORED NONELECTRICAL ENERGY

Stored nonelectrical energy in devices that could reenergize electric circuit parts shall be blocked or relieved to the extent that the circuit parts could not be accidentally energized by the device. For example, such specific devices are wound springs and pneumatic-driven devices.

2.13.1.6 LOCKOUT/TAGOUT PROCEDURE

Each employer shall document and implement lockout/tagout procedures to safeguard employees from injury while they are working on or near deenergized electric circuits and equipment. The lockout/tagout procedures shall meet the requirement of NFPA 70E 120.3, 29 CFR 1910.147(c) to (f), 1910.269(d) and (m), 1910.333, and 1926.417. (See Figure 2-6.)

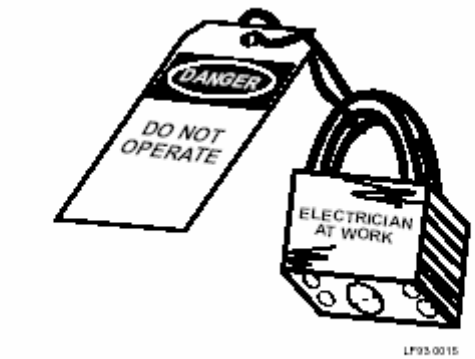

OSHA SECTIONS 29 CFR 1910.147, 1910.269(d) and (m), 1910.333, and 1926.417

Figure 2-6. Employers shall implement and document a lockout-tagout program with procedures to safeguard employees from injury while working on or near deenergized systems.

2.13.2 VERIFICATION OF DEENERGIZED CONDITION

Verification shall be made that all live circuits, parts, and other sources of electrical energy, including any mechanical energy, have been disconnected, released, or restrained.

A qualified worker shall operate the equipment operating controls, perform voltage verification, inspect open switches and draw-out breakers etc. to assure the isolation of energy sources.

2.13.2.1 VOLTAGE VERIFICATION TEST

A qualified worker shall use the appropriate test equipment to test the circuit elements and electrical parts of equipment to which employees will be exposed and shall verify that the circuit elements and equipment parts are deenergized. The test shall also determine if a hazardous energized condition exists as a result of induced voltage or voltage backfeed after specific parts of the circuit have been deenergized. If the circuit to be tested is over 600 V nominal, the test equipment shall be checked for proper operation immediately before and immediately after this test. This test is also recommended for systems of 600 V or less. Testing shall be performed as if the circuit is energized. The voltage verification device used shall be rated for the application. Proximity testers and solenoid-type devices should not be used to test for the absence of AC voltage. See 2.13.4.7 for further information.

2.13.2.2 APPLICATION OF GROUNDS

Personnel protective grounds shall be applied on circuits 600 V and above or on lesser voltages where residual charges may accumulate. Personal protective grounds shall be selected and installed in accordance with appropriate standards. (See sections 4.6 and 7.5). Consideration shall be given to step and touch potentials in the area of the temporary ground connections.

2.13.3 REENERGIZING EQUIPMENT

The following requirements shall be met before circuits or equipment are reenergized, even temporarily.

2.13.3.1 TESTS AND VISUAL INSPECTIONS

A qualified worker shall conduct tests and visual inspections to verify that all personnel are in the clear and that all tools, electrical jumpers, shorts, grounds, and other such devices have been removed so that the circuits and equipment can be safely energized.

2.13.3.2 WARNING EMPLOYEES

Employees exposed to the hazards associated with reenergizing the circuit or equipment shall be warned to stay clear of circuits and equipment.

2.13.3.3 REMOVING LOCK AND TAG

Each lock and tag shall be removed by applying the following:

1. Each lockout or tagout device shall be removed from each energy-isolating device by the authorized employee who applied the lockout or tagout device, or under their direct supervision, or as stated below.

2. Exception: When the authorized employee who applied the lockout or tagout device is not available to remove it, that device maybe removed under the direction of his or her supervisor. Extreme care shall be taken and specific procedures shall be followed. The specific procedure shall include at least the following elements:

    a. Verification by the supervisor that the authorized employee who applied the device is not at the affected facility

    b. Making all reasonable efforts to contact the authorized employee to inform him or her that the lockout or tagout device has been removed

    c. Ensuring that the authorized employee has this knowledge before he or she resumes work at the affected facility.

2.13.4 SAFE ENERGIZED WORK (HOT WORK)

Safety-related work practices shall be used to prevent electrical shock or other electrically induced injuries when employees work on or near electrical conductors or circuit parts that are energized. Only qualified workers who are knowledgeable and have been trained to work safely on energized circuits and to use the appropriate PPE, protective clothing, insulating shielding materials, and insulated tools shall be permitted to work on energized conductors or circuit parts.

2.13.4.1 APPROACH DISTANCE

No unqualified employee shall be permitted to approach or take any conductive object closer to exposed, energized lines or parts than the distance listed in NFPA 70E 130.26, Approach Boundaries to Live Parts for Shock Protection.

2.13.4.2 TWO WORKERS

Because of exposure to energized parts, electrical work, independent of voltage, that presents a significant shock or arc blast hazard to employees, needs to be evaluated as to the number of employees involved.

2.13.4.4 ILLUMINATION

Adequate illumination shall be provided before workers are allowed to enter spaces containing exposed energized parts.

2.13.4.5 SYSTEMS UNDER LOAD

Electrical equipment intended to switch current shall have a rating sufficient for the current. Manual switches and disconnects, taps, terminators, and nonenclosed switches shall not be operated while under load, unless the devices are rated as load-break type and are so marked.

2.13.4.6 WORKING WITH TEST INSTRUMENTS AND EQUIPMENT

Sometimes it becomes necessary to check the continuity of power circuits, control circuits, etc., by using a particular testing instrument designed for the testing involved. The voltage device used shall be rated for the application. Proximity testers and solenoid-type devices should not be used to test for the absence of AC voltage because they have a lower voltage (usually in the range of 50 to 110 volts) below which they will not detect voltage, even if it is present. Also, these testers will not detect DC voltage or detect AC voltage in a cable that is shielded. They are very useful in certain applications such as finding cables that go through a panel but do not terminate in the panel. However, it should be noted that just because a proximity tester does not detect voltage does not mean that the equipment or device is actually deenergized. The absence of voltage can only be verified with a voltmeter rated for the application.

Voltmeters, both analog and digital, are designed for a number of applications from appliance troubleshooting to power system testing. The type of voltmeter used depends on where in the power system you are using the meter. The user must read and understand the manufacturers' instructions on the use and application of the voltmeter. When a multi-function, multi-scale meter is used, it is important for the user to select the function and scale necessary for the task being performed in order to avoid damage or destruction of the meter and injury to the employee. The selection of test instruments and equipment shall be based on its application and categorization.

The following should apply when working with test instruments and equipment on energized circuits.

2.13.4.6.1 QUALIFIED EMPLOYEES

Only qualified workers who are knowledgeable and have been trained to work safely with test instruments and equipment on energized circuits shall be permitted to perform testing work on electrical circuits or equipment where there is danger of injury from accidental contact with energized parts or improper use of the test instruments and equipment.

2.13.4.6.2 VISUAL INSPECTIONS

Test instruments and equipment and all associated test leads, cables, power cords, probes, and connectors shall be visually inspected for external defects or damage before being used on any shift. If there are defects or evidence of damage that might expose an employee to injury, the defective or damaged item shall not be used until required repairs and tests have been made.

2.13.4.6.3 RATING INSTRUMENTS AND EQUIPMENT

Test instruments and equipment and their accessories shall be rated for the circuits and equipment to which they will be connected and shall be suitable for the environment in which they will be used.

2.13.4.6.4 CALIBRATION OF ELECTRICAL INSTRUMENTS

The American National Standards Institute (ANSI) standard C39.1 defines the minimum performance and general requirements level for electrical instruments. ANSI standards also ensure that an instrument, when calibrated to National Institute of Standards and Technology (NIST) traceable standards, is capable of transferring that quality of measurement to field conditions within specified limits, where that level of measurement quality is needed.

A record should be maintained for each instrument, by serial number or equivalent method, showing dates of inspection, calibration data as received, the date when it should be recalled from the field and a recalibration check made, and any interim repairs. After a period of time, it should become obvious what frequency needs to be established for calibrating each instrument.

3.0 ELECTRICAL PREVENTIVE MAINTENANCE

The term "electrical preventive maintenance" (EPM) refers to a program of regular inspection and service of equipment to detect potential problems and to take proper corrective measures.

3.1 DEVELOPMENT AND IMPLEMENTATION REQUIREMENTS

An EPM program should be developed and implemented based on the requirements of:

1. DOE 4330 4B, Maintenance Management Program
2. NFPA 70B, Recommended Practice for Electrical Equipment Maintenance
3. NFPA 70E, Standard for Standard for Electrical Safety in the Workplace
4. NFPA 72, National Fire Alarm Code
5. National Electrical Testing Association (NETA).
6. ANSI-C2, National Electrical Safety Code

3.2 DEFINITION

An EPM program is defined as the system that manages the conducting of routine inspections and tests and the servicing of electrical equipment so that impending troubles can be detected and reduced or eliminated. Where designers, installers, or constructors specify, install, and construct equipment with optional auxiliary equipment, that optional equipment should be part of the EPM program. Records of all inspections, tests, and servicing should be documented and reviewed.

All electrical equipment that is appropriate for EPM should be inspected, tested, and serviced in accordance with an EPM program.

Inspections, tests, and servicing shall be performed by personnel who are qualified for the work to be performed. These qualifications can be shown by appropriate documentation of work experience, on-the-job, and offsite formal training to verify understanding and retention of minimum knowledge, skills, and abilities.

3.3 MAINTENANCE

Electrical equipment should be maintained in accordance with the manufacturer's recommendations and instructions for the local operating environment. A copy of the manufacturer's recommendation should be documented and on file.

3.4 INSPECTION

If an EPM program does not exist, an inspection, testing, and servicing program should be developed and implemented to establish a baseline to initiate an EPM program. The inspection frequency should be as recommended by the manufacturer or as otherwise indicated in NFPA 70B. An initial period of inspection (sometimes several years) provides sufficient knowledge, which when accumulated, might permit increasing or decreasing that interval based upon documented observations and experience.

One guidance on how to determine inspection frequency is described in various sections of NFPA 70B, Tables H.1, H.2 and I.1 including but not limited to the following sections:

1. Inspection Frequency for Planning and Developing an Electrical Preventive Maintenance Program

2. Recommended Frequency for Substations

3. Frequency of Maintenance for Switchgear Assemblies

4. Regular Inspections and Special Inspections and Repairs for Liquid-Filled Transformers

5. Regular Inspections and Special Inspections and Repairs for Dry-Type Transformers

6. Visual Inspection Intervals for Power Cables

7. Frequency of Inspections for Enclosures of Motor Control Centers

8. Recommended Frequency for Ground-Fault Circuit Interrupters

9. General and Inspection and Cleaning for High-Voltage Fuses

10. Frequency for Rotating Equipment

11. Cleaning Interval for Lighting Equipment

12. Visual Inspection Before and After Each Use, Periodic Inspection of Crucial Wear Points, Excessive Dirt Accumulation, Insufficient or Improper Lubrication, and Visually Inspected Before Each Use for Portable Electric Tools and Equipment

13. Special Maintenance Tests, Frequency of Tests, Inspection Frequency and Procedures, and Insulating-Liquid Analysis for Testing and Test Methods

14. Reinspection and Retesting Within One or Two Years After Energization for General Aspects of Maintaining Medium- and Low-Voltage Distribution Systems, Frequency, Regreasing, and Frequency for Lubrication of Rotating Equipment

15. Inspections Should Be Made of All New Installations and Whenever Alterations Are Made and; Recordkeeping for Electrostatics Static Grounding (see NFPA 77)

16. Inspection and Testing of Power Supplies, Functional Systems Testing of Interlock and Logic Systems, Visual Inspection of Level Devices, Frequency of Testing Safety and

Shutdown Systems, 19-4.11.1; Frequency of Testing Alarm Systems, and Visual Checking of Wiring Systems for Process Instrumentation and Control

17. Frequency for Cable Tray System

18. Routine Maintenance for Uninterruptible Power Supply (UPS) Systems

3.5 ESSENTIAL ELEMENTS

The EPM program should include the essential elements described in NFPA 70B, Chapter 5, "What is an Effective EPM Program." This includes planning, identifying the main parts, and utilizing available support services for a program. For example:

1. Assigning qualified personnel
2. Surveying and analyzing equipment maintenance requirements
3. Performing routine inspections and tests
4. Analyzing inspection and test reports
5. Prescribing corrective measures
6. Performing necessary work
7. Preparing appropriate records.

3.6 PLANNING AND DEVELOPING AN EPM PROGRAM, AND FUNDAMENTALS OF EPM

The EPM program should be planned and developed to include each of the functions, requirements, and economic considerations described in NFPA 70B, Chapter 6, "Planning and Developing an EPM Program," and NFPA 70B, Chapter 7 , "Fundamentals of EPM." Chapter 6 includes surveying the existing electrical system installation, identifying crucial equipment, establishing a systematic program to follow, and developing methods and procedures to plan, analyze, perform, verify, and record.

Electrical drawings should be kept current. A system of recording changes in electrical systems and then integrating those changes into the applicable drawings should be developed and implemented.

NFPA 70B includes designing to accommodate maintenance, scheduling maintenance, personnel and equipment safety, circuit protection, and initial acceptance testing.

3.7 GROUND-FAULT PROTECTION

The EPM program should include the essential ingredients of Chapter 14 of NFPA 70B, "Ground Fault Protection." This includes ground fault circuit interrupters (GFCIs) and ground-fault protection for equipment (GFPE).

Ground-fault protective devices are intended to protect personnel and equipment. There are two distinct types, GFCI and GFPE, and it is of extreme importance to understand the difference between them.

A GFCI is defined in Article 100 of the NEC as a device intended for the protection of personnel in their job assignments. (See NEC Sections 210-8, 215-9, 427, 527)

A GFPE is defined in Article 100 of the NEC as a system intended to provide protection of equipment from line-to-ground fault currents. GFPE systems (equipped with or without a test panel) shall be inspected and tested at installation and at specified intervals as recommended by the manufacturer.

Figure 3-1 shows a zero sequence type of ground fault protection.

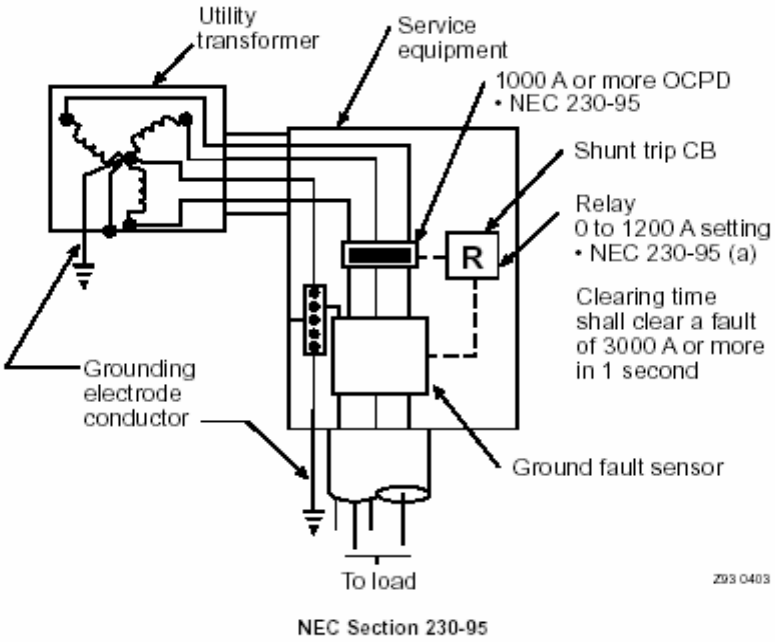

Figure 3-1. Ground-fault protection shall be provided with 277/480-V, three-phase, four-wire services with over current protection devices of 1,000 A or more. A ground fault sensor (window) can be used to encircle all service conductors, including the grounded conductor (neutral).

Inspections, tests, and servicing shall be performed by personnel who are qualified for the work to be performed. These qualifications can be shown by appropriate documentation of work experience, on-the-job, and offsite formal training to verify understanding and retention of minimum knowledge, skills, and abilities.

4.0 GROUNDING

This section presents general rules for the grounding and bonding of electrical installations. Qualified workers should clearly understand the concepts of grounding practices as required by the NEC. They should also clearly understand the definition and intent of the following components of a grounding system that are explained in this chapter:

1. Grounded conductor
2. Grounding conductor
3. Grounding electrode conductor
4. Bonding jumper
5. Grounding electrode.

4.1 REGULATIONS, CODES, AND REFERENCES

4.1.1 ENGINEERING SPECIFICATIONS AND DRAWINGS

Engineering specifications and drawings should identify the requirements for all components and clearly illustrate the grounding electrode system, the grounding electrode conductor, bonding points and bonding jumpers, and the connection point for the grounded conductor and the grounding conductors. Where used for installation or construction purposes, these specifications and drawings should also include detailed installation instructions.

4.2 CIRCUIT AND SYSTEM GROUNDING

Circuit and system grounding consists of connecting the grounded conductor, the equipment grounding conductor, the grounding busbars, and all noncurrent-carrying metal parts to ground. This is accomplished by connecting a properly sized unspliced grounding electrode conductor between the grounding busbar and the grounding electrode system. There are three fundamental purposes for grounding an electrical system:

1. To limit excessive voltage from lightning, line surges, and crossovers with higher voltage lines.
2. To keep conductor enclosures and noncurrent-carrying metal enclosures and equipment at zero potential to ground.
3. To facilitate the opening of overcurrent protection devices in case of insulation failures because of faults, short circuits, etc.

4.3 EQUIPMENT GROUNDING

Equipment grounding systems, which consist of interconnected networks of equipment grounding conductors, are used to perform the following functions:

1. Limit the hazard to personnel (shock voltage) from the noncurrent-carrying metal parts of equipment raceways and other conductor enclosures in case of ground faults, and

2. Safely conduct ground-fault current at sufficient magnitude for fast operation of the circuit overcurrent protection devices.

To ensure the performance of the above functions, equipment grounding conductors are required to:

1. Be permanent and continuous

2. Have ample capacity to safely conduct ground-fault current likely to be imposed on them; and

3. Have impedance sufficiently low to limit the voltage to ground to a safe magnitude and to facilitate the operation of the circuit overcurrent protection devices.

4.4 BONDING

Caution shall be taken to ensure that the main bonding jumper and equipment bonding jumper are sized and selected correctly. Bonding completes the grounding circuit so that it is continuous. If a ground fault occurs, the fault current will flow and open the overcurrent protection devices. The means of bonding shall provide the following to ensure the grounding system is intact:

1. Provide a permanent connection,

2. Provide a positive continuity at all times, and

3. Provide ampacity to conduct fault current.

See Figure 4-1 on the proper grounding of electrical systems.

Electrical systems can be operated grounded or ungrounded, depending on the condition of the systems' use. Electrical systems are grounded to protect circuits, equipment, and conductor enclosures from dangerous voltages and personnel from electrical shock.

4.5 GROUNDED OR UNGROUNDED SYSTEMS

Ungrounded systems may provide greater continuity of operations in the event of a ground fault. However, the second fault will most likely be more catastrophic than a grounded system fault. Whenever ungrounded systems are used in a facility, the maintenance personnel should receive training in how to detect and troubleshoot the first ground on an ungrounded system.

"Grounded" means that the connection to ground between the service panel and earth has been made. Ungrounded electrical systems are used where the designer does not want the overcurrent protection device to clear in the event of a ground fault.

Ground detectors can be installed per NEC to sound an alarm or send a message to alert personnel that a ground fault has occurred on one of the phase conductors. Ground detectors will detect the presence of leakage current or developing fault current conditions while the system is still energized and operating. By warning of the need to take corrective action before a

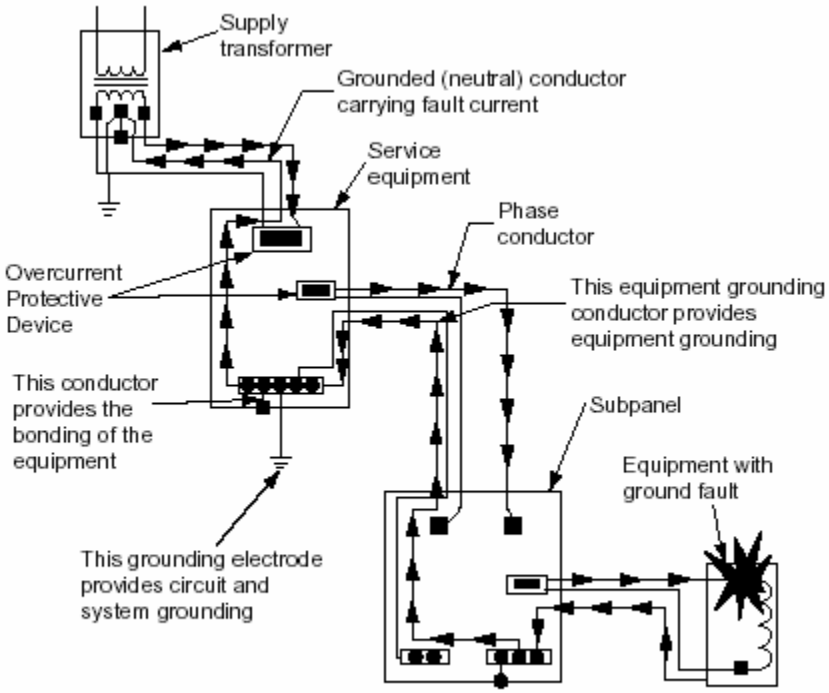

NEC section 250-4

Figure 4-1. Circuit and system grounding consists of earth grounding the electrical system at the supply transformer and the line side of the service equipment. Equipment grounding and bonding is accomplished by connecting all metal enclosures and raceways together with the grounding conductors.

problem occurs, safe conditions can usually be maintained until an orderly shutdown is implemented.

4.5.1 GROUNDED SYSTEMS

Grounded systems are equipped with a grounded conductor that is required to be run to each service disconnecting means. The grounded conductor can be used as a current-carrying conductor to accommodate all neutral related loads. It can also be used as an equipment grounding conductor to clear ground faults.

A network of equipment grounding conductors is routed from the service equipment enclosure to all metal enclosures throughout the electrical system. The equipment grounding conductor carries fault currents from the point of the fault to the grounded bus in the service equipment where it is transferred to the grounded conductor. The grounded conductor carries the fault current back to the source and returns over the faulted phase and trips open the overcurrent protection device.

Note: A system is considered grounded if the supplying source such as a transformer, generator, etc., is grounded, in addition to the grounding means on the supply side of the service equipment disconnecting device for separately derived systems.

The neutral of any grounded system serves two main purposes: (1) it permits the utilization of line-to-neutral voltage and thus will serve as a current-carrying conductor to carry any

unbalanced current, and (2) it plays a vital role in providing a low-impedance path for the flow of fault currents to facilitate the operation of the overcurrent devices in the circuit. (See Figure 4-2.) Consideration should be given to the sizing of the neutral conductor for certain loads due to the presence of harmonic currents.

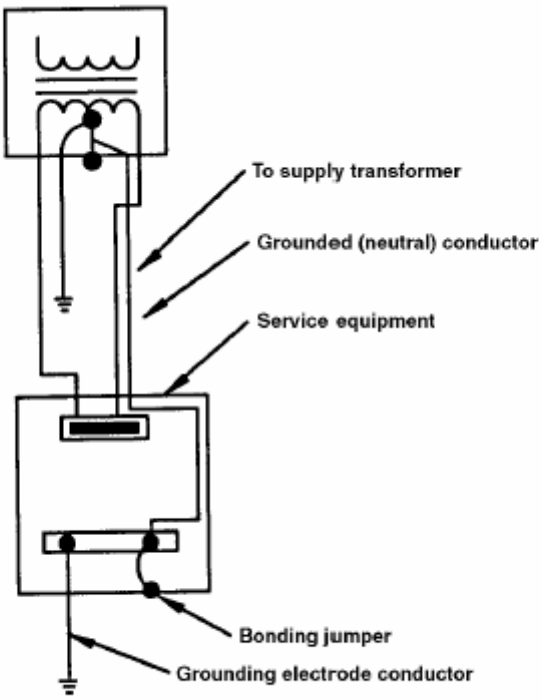

NEC Section 250-130

Figure 4-2. A grounded system is equipped with a grounded (neutral) conductor routed between the supply transformer and the service equipment.

4.5.2 UNGROUNDED SYSTEMS

Ungrounded systems operate without a grounded conductor. In other words, none of the circuit conductors of the electrical system are intentionally grounded to an earth ground such as a metal water pipe, building steel, etc. The same network of equipment grounding conductors is provided for ungrounded systems as for solidly grounded electrical systems. However, equipment grounding conductors (EGCs) are used only to locate phase-to-ground faults and sound some type of alarm. Therefore, a single sustained line-to-ground fault does not result in an automatic trip of the overcurrent protection device. This is a major benefit if electrical system continuity is required or if it would result in the shutdown of a continuous process. However, if an accidental ground fault occurs and is allowed to flow for a substantial time, overvoltages can develop in the associated phase conductors. Such an overvoltage situation can lead to conductor insulation damage, and while a ground fault remains on one phase of an ungrounded system, personnel contacting one of the other phases and ground are subjected to 1.732 times the voltage they would experience on a solidly neutral grounded system. (See Figure 4-3.)

Note: All ungrounded systems should be equipped with ground detectors and proper maintenance applied to avoid, as far as practical, the overcurrent of a sustained ground fault on ungrounded systems. If appropriate maintenance is not provided for ungrounded systems, a grounded system

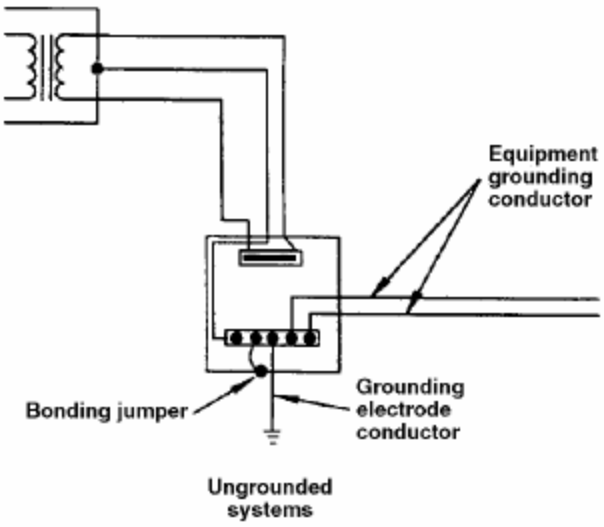

NEC Section 250-21

Figure 4-3. An ungrounded system does not have a grounded (neutral) conductor routed between the supply transformer and the service equipment because the supply transformer is not earth grounded.

should be installed to ensure that ground faults will be cleared and the safety of circuits, equipment, and that personnel safety is ensured.

4.5.3 HIGH-IMPEDANCE GROUNDING

Electrical systems containing three-phase, three-wire loads, as compared to grounded neutral circuit conductor loads, can be equipped with a high-impedance grounded system. High-impedance grounded systems shall not be used unless they are provided with ground fault indicators or alarms, or both, and qualified personnel are available to quickly locate and eliminate such ground faults. Ground faults must be promptly removed or the service reliability will be reduced. See NEC for requirements pertaining to installing a high-impedance grounding system. (See Figure 4-4.)

4.6 GROUNDING REQUIREMENTS

Alternating current systems of less than 50 volts shall be grounded as required in NEC. Systems of 50 to 1,000 V should be solidly grounded as required by NEC. Systems supplying phase-to-neutral loads shall also be solidly grounded (See Figure 4-5). The following electrical systems are required to be solidly grounded:

1. 120/240-V, single-phase, three-wire

2. 208Y/120-V, three-phase, four-wire,

3. 480Y/277-V, three-phase, four-wire,

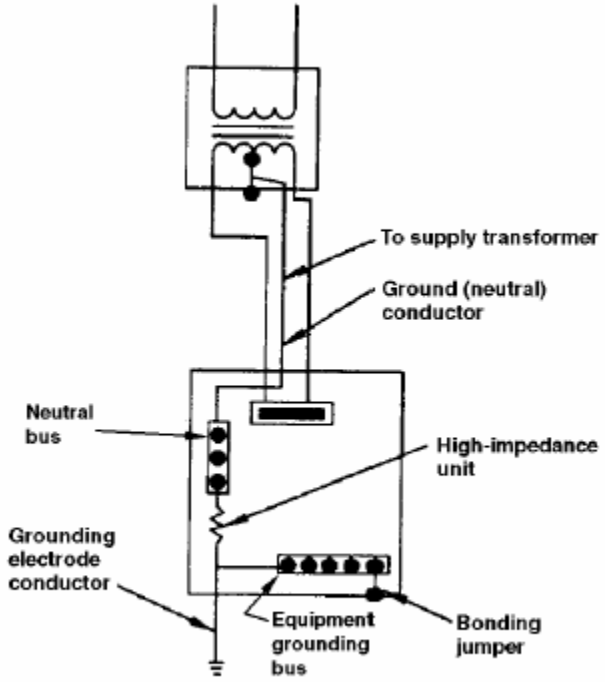

NEC Section 250-36

Figure 4-4. A high-impedance grounding system has a high-impedance unit, installed between the grounded (neutral) conductor and the grounding electrode conductor, which is used to regulate fault current.

4. 120/240-V, three-phase, four-wire, delta. (Midpoint of one phase used as a grounded circuit conductor.)

The following systems are not required to be solidly grounded:

1. 240-V, three-phase, three-wire delta

2. 480-V, three-phase, three-wire

3. 600-V, three-phase, three-wire.

These electrical systems do not supply phase to neutral loads. They supply only phase-to-phase loads.

4.7 GROUNDING ELECTRODE CONDUCTOR (GEC)

The main purpose of the grounding electrode conductor (GEC) is to connect the electrical system to earth ground. The GEC actually provides three grounding paths to the grounding electrode system. They are as follows:

1. The grounded conductor path

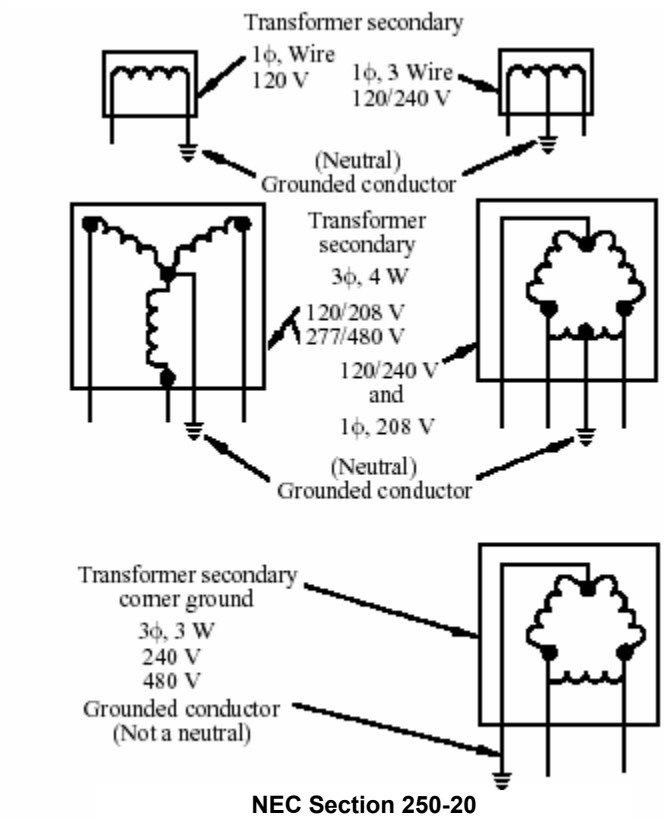

Figure 4-5. Systems of 50 to 1,000 V AC that operate grounded are required to have the grounded conductor connected to earth ground at the supplying transformer and service equipment.

2. The equipment grounding path

3. The bonding path.

In grounded systems, the GEC connects to the neutral bar in the service equipment enclosure. In ungrounded systems, the GEC connects to the grounding terminal bar. It grounds the following items to the grounding electrode system:

1. The grounded conductor, if present

2. The equipment grounding conductor, if present

3. The metal of conduits, if present

4. The metal of enclosures, if present

5. The bonding jumpers bonding together metal enclosures and conduits

6. The metal enclosure of the service equipment.

4.7.1 SIZING THE GROUNDING ELECTRODE CONDUCTOR

The NEC Section 250-94 requires the grounding electrode conductor to be sized by the circular mils rating of the largest service entrance conductor or conductors and selected from NEC Table 250-66 based on these values.

For example, the size of the service entrance conductors from a delta, three-phase, four-wire midpoint tap is #250 kcmil, THWN copper for phases A and C, #2/0 for phase B, and #1/0 for the neutral. What size copper GEC is required to ground this system to a metal water pipe?

Step 1:	Finding the largest phase-NEC 250-66 #250 kcmil is the largest phase
Step 2:	Finding the size GEC-NEC Table 250-66 #250 kcmil requires #2 cu
Answer:	The size of grounding electrode conductor (GEC) is at least #2 copper.

Note: NEC Table 250-66 is used to size the grounding electrode conductor for both grounded and ungrounded systems. The table is used where the grounding electrode conductor is connected to a metal water pipe or the metal frame of building steel.

4.7.2 EXCEPTIONS TO NEC 250-66

There is an exception to the main rule. It has three parts and pertains to specific types of grounding electrodes. The exception applies to grounded and ungrounded systems.

Exception (a) applies to made electrodes only, such as rod, pipe, or plate electrodes. The grounding electrode conductor is not required to be larger than #6 copper or #4 aluminum.

Exception (b) to NEC Section 250-66 requires at least a #4 copper conductor to be used as a grounding electrode conductor to ground the electrical system to a concrete-encased electrode.

Exception (c) requires at least a #2 copper conductor to be used as a grounding electrode conductor to ground the electrical system to a ground ring.

4.8 MAIN BONDING JUMPER

The primary function of the main bonding jumper is to connect the grounded circuit conductors and the equipment grounding conductors at the service equipment. The main bonding jumper serves as the main link between the system grounded conductors and the grounding electrode system where metal equipment enclosures and raceways are utilized to enclose conductors and components. If the main bonding jumper is left out, there is not a complete circuit for fault current and is an invitation to a dangerous situation.

The main bonding jumper shall connect together the following items:

1. Grounded conductors and grounded terminal

2. Equipment grounding conductors and grounding terminal

3. All metal enclosures enclosing conductors and components.

If supplied, the manufacturers main bonding jumper is the preferred conductor to be used as the main bonding jumper. NEC requires the main bonding jumper to be a (1) wire, (2) screw, (3) busbar, or (4) a similar suitable conductor.

NEC requires the main bonding jumper to be at least the same size as the grounding electrode conductor where the circular mils rating of the service entrance conductors does not exceed 1100 kcmil for copper or 1750 kcmil for aluminum.

For example: What size main bonding jumper is required to ground the metal enclosure of the service equipment to the grounding terminal bar where the service entrance is made up of one #250 kcmil, THWN copper conductor per phase?

Step 1:	Finding the largest phase — NEC 250-79(d) #250 kcmil is the largest phase
Step 2:	Finding the bonding jumper — Table 250-94 #250 kcmil requires #2 copper
Answer:	The size of the main bonding jumper (GEC) is at least #2 copper.

For example: What size main copper bonding jumper is required for a service entrance with a makeup of 2400 kcmil copper conductors per phase?

Step 1:	Finding the largest phase — NEC 250-79(d) 2400 kcmil x 0.125 = 300 kcmil
Step 2:	Finding the main bonding jumper — NEC Table 250-94; Table 8, Ch. 9 requires 300 kcmil
Answer:	The main bonding jumper is required to be at least 300 kcmil copper.

Note: In this case the main bonding jumper is greater in size than the grounding electrode conductor, which is only required to be #3/0 copper per NEC Table 250-94 based upon the 2400 kcmil copper conductors.

4.9 SYSTEM WITH GROUNDED CONDUCTOR

The main purpose of the grounded conductor is to carry unbalanced neutral current or fault current in the event that one phase should go to ground.

Note: The grounded conductor does not always have to be a neutral conductor. It is a phase conductor when used in a corner grounded delta system.

In solidly grounded service-supplied systems, the equipment grounding conductors shall be bonded to the system-grounded conductor and the grounding electrode conductor at the service equipment. The grounded conductor may be used to ground the noncurrent-carrying metal parts of equipment on the supply side of the service disconnecting means per NEC Section 250-142. The grounded conductor can also serve as the ground-fault current return path from the service equipment to the transformer that supplies the service.

The grounded conductor shall not be used to ground the metal parts of enclosures enclosing conductors and components on the load side of the service per NEC Section 250-142. See NEC Sections 250-130, (b), Ex. and 250-140 for exceptions to this basic rule. NEC Section 250-24 requires the grounded conductor to be connected as follows:

1. The grounded conductor shall be connected to the grounded (neutral) service conductor.

2. The connection shall be at an accessible point.

3. That accessible point can be anywhere from the load end of the service drop or service lateral to and including the neutral bar in the service disconnecting means or service switchboard.

The NEC allows the grounded conductor to be terminated and connected to ground at a multitude of locations on the supply side of the service equipment. These locations are as follows:

1. Service equipment

2. Meter base

3. Current transformer (CT) can

4. Metal gutter or wireway containing service entrance conductors.

See Figure 4-6 for the rules concerning the use of the grounded conductor.

NEC Section 250-24 lists the rules for sizing the grounded conductor where it is not used as a grounded neutral circuit. NEC gives the rules for calculating and sizing the grounded conductor when it is used as a circuit conductor. The minimum size for the grounded conductor is computed as follows:

1. The basic rule is to select the size directly from Table 250-66 when the size of the service-entrance conductors is not larger than 1100 kcmil copper or 1750 kcmil aluminum.

2. When the service entrance conductors are larger than 1100 kcmil copper or 1750 kcmil aluminum, the grounded conductor shall be 12 1/2% of the largest phase conductor.

3. Where the service phase conductors are paralleled, the size of the grounded conductor shall be based on the total cross-sectional area of the phase conductors.

For example: What size THWN copper grounded conductor is required for a service having a total kcmil rating of 250 per phase? (All phase conductors are THWN copper.)

Step 1: Service less than 1100 kcmil-NEC Table 250-66 250 kcmil requires #2 copper

Answer: The size of the grounded conductor is at least #2 THWN copper.

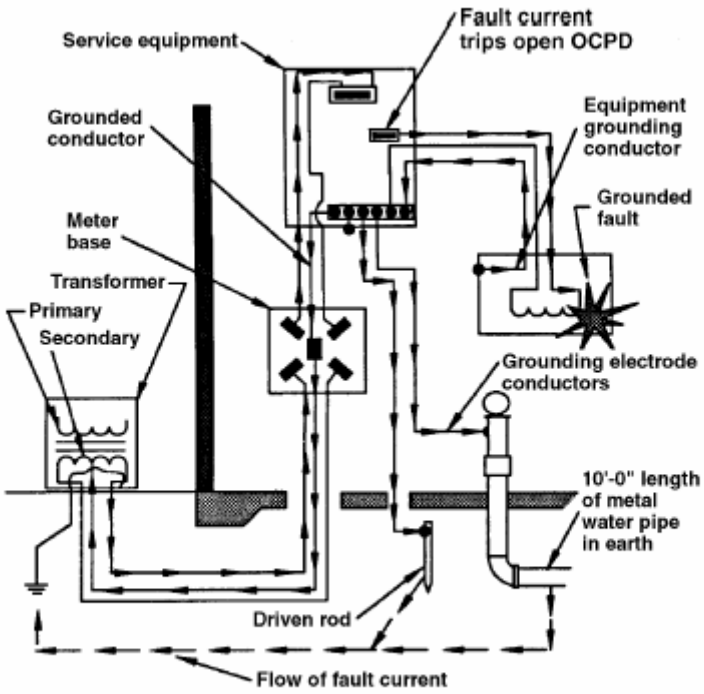

NEC Section 250.24(b)

Figure 4-6. The grounded (neutral) conductor is used to carry normal neutral current or ground fault current in case a ground fault should develop on one of the ungrounded (hot) phase conductors.

For example: What size THWN copper grounded conductor is required for a parallel service having a total kcmil rating of 2400 per phase? (All conductors are THWN copper.)

Step 1:	Service exceeding 1100 kcmil-NEC Table 250-66 2400 kcmil x 0.125 = 300 kcmil
Answer:	The grounded conductor is required to be at least a #300 kcmil, THWN copper conductor.

Note: NEC Table 250-94 is used only if the service conductors are rated less than 1100 kcmil for copper or 1750 kcmil for aluminum.

4.10 EQUIPMENT GROUNDING CONDUCTOR

Equipment grounding conductors for ac systems, where used, should be run with the conductors of each circuit per NEC Section 250-134.

Earth and the structural metal frame of a building may be used for supplemental equipment bonding, but they shall not be used as the sole equipment grounding conductor for ac systems per NEC Sections 250-136 and 250-2.

For circuits having paralleled conductors in multiple metal raceways, an equipment grounding conductor shall be run in each raceway. The size of each paralleled equipment grounding conductor is a function of the rating of the circuit overcurrent protection. (See NEC Sections 250-122.

4.10.1 SIZING THE EQUIPMENT GROUNDING CONDUCTOR

NEC Section 250-122 lists the requirements for calculating the size of the equipment grounding conductors in an electrical circuit. There are basically five steps to be applied in sizing, selecting, and routing the equipment grounding conductors:

This method is used where the service entrance conductors are over 1100-kcmil copper or 1750-kcmil aluminum. NEC Table 250-66 cannot be used for sizing the grounded conductor. The grounded conductor is required to be not less than 12 1/2% of the cross-sectional area of the largest phase conductor.

1. NEC Table 250-122 shall be used to size the equipment grounding conductor.

2. When conductors are run in parallel in more than one raceway, the equipment grounding conductor is also run in parallel.

3. Where more than one circuit is installed in a single raceway, one equipment grounding conductor may be installed in the raceway. However, it must be sized for the largest overcurrent device protecting conductors in the raceway.

4. When conductors are adjusted in size to compensate for voltage drop, the equipment grounding conductor shall also be adjusted in size.

5. The equipment grounding conductor is never required to be larger than the circuit conductors.

For example: What size THWN copper equipment grounding conductor is required to be run in a raceway with a 70 A overcurrent protection device protecting the circuit?

Step 1:	Finding EGC-NEC Table 250-122 70 A OCPD requires #8 copper
Answer:	The equipment grounding conductor is required to be at least #8 THWN copper.

4.10.2 SEPARATE EQUIPMENT GROUNDING CONDUCTORS

The possibility of worker exposure to electric shock can be reduced by the use of separate equipment grounding conductors within raceways.

The separate equipment grounding conductors contribute to equalizing the potential between exposed noncurrent-carrying metal parts of the electrical system and adjacent grounded building steel when ground faults occur. The resistance (inductive reactance) of the ground fault circuit normally prevents a significant amount of ground fault current from flowing through the separate equipment grounding conductors.

Ground fault current flows through the path that provides the lowest ground fault circuit impedance. Fittings and raceway systems have been found that are not tightly connected or are corroded which prevents good continuity. Therefore, the equipment grounding conductor shall be the path for the fault current to travel over and clear the overcurrent protection device protecting the circuit.

NEC Sections 300-3(b) and 250-134 require the equipment grounding conductors to be routed in the same raceway, cable, cord, etc., as the circuit conductors. All raceway systems should be supplemented with separate equipment grounding conductors.

Note: The equipment grounding conductor shall be routed with supply conductors back to the source. Additional equipment grounding may be made to nearby grounded structural members or to grounding grids, but this shall not take the place of the co-routed equipment grounding conductors. Raceway systems should not be used as the sole grounding conductor.

4.11 UNGROUNDED SYSTEMS

Three-phase, three-wire, ungrounded systems (DELTA), which are extensively used in industrial establishments, do not require the use of grounded conductors as circuit conductors.

The same network of equipment grounding conductors shall be provided for ungrounded systems as for grounded systems. Equipment grounding conductors are required in ungrounded systems to provide shock protection and to present a low-impedance path for phase-to-phase fault currents in case the first ground fault is not located and cleared before another ground fault occurs on a different phase in the system.

Grounding electrode conductors and bonding jumpers shall be computed, sized, and installed in the same manner as if the system were a grounded system. Apply all the requirements listed in Sections 4.6 through 4.8 for sizing the elements of an ungrounded system.

4.12 GROUNDING A SEPARATELY DERIVED SYSTEM

NEC Sections 250-30 cover the rules for grounding separately derived systems. The system grounding conductor for a separately derived system shall be grounded at only one point. That single system grounding point is at the source of the separately derived system and ahead of any system disconnecting means or overcurrent devices. Where the main system disconnecting means is adjacent to the generator, converter, or transformer supplying a separately derived system, the grounding connection to the system grounded conductor can be made at or ahead of the system disconnecting means.

The preferred grounding electrode for a separately derived system is the nearest effectively grounded structural metal member of the building or the nearest effectively grounded water pipe. If neither is available, concrete-encased electrodes or made electrodes are permitted.

In a grounded, separately derived system, the equipment grounding conductors shall be bonded to the system-grounded conductor and to the grounding electrode at or ahead of the main system disconnecting means or overcurrent protection device. The equipment grounding conductor should always be connected to the enclosure of the supply transformer, generator, or converter.

The grounding electrode conductor, the main bonding jumper, the grounded conductor, and the equipment grounding conductor are calculated, sized, and selected by the rules listed in Sections 4.7 through 4.10. (See Figure 4-7.)

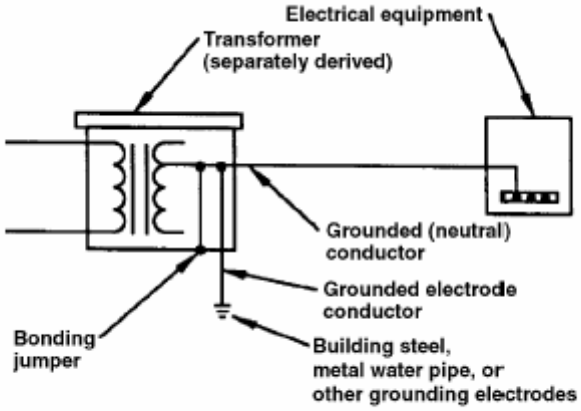

NEC Section 250-30

Figure 4-7. The grounded (neutral) conductor can be used to carry both normal neutral current and abnormal ground fault current.

4.13 GROUNDING ELECTRODE SYSTEM

If 10 ft or more of metal water pipe is in the earth, the water pipe is considered the grounding electrode, but it shall be supplemented by an additional electrode. NEC Section 250-50 lists four types of electrodes. If one or all are available, they shall be bonded together to make up the grounding electrode system. The bonding jumper that connects these electrodes shall be at least as large as the grounding electrode conductor of the system sized by NEC Table 250-66. The four types of electrodes are as follows:

1. Metal water pipe in contact with the earth for 10 ft. or more. Interior metal water pipe beyond 5 ft. from the water entrance shall not be used as a part of the grounding electrode system or as a conductor to interconnect those electrodes.

2. Metal frame of the building, where effectively grounded

3. Bare #4 conductor at least 20 ft in length and near the bottom of the concrete foundation (within 2 in.), or 1/2 in. reinforcing steel or rods at least 20 ft in length (one continuous length or spliced together)

4. Bare #2 conductor encircling building at least 2-1/2 ft. in the ground (spliced together at each end).

The grounding electrode conductor at the service equipment can be connected to any convenient interbonded electrodes that provide a solid, effective connection. Metal water pipe shall be supplemented by an additional electrode, which can be any of the following electrodes:

1. A rod

2. Pipe
3. Plate
4. Building steel
5. Concrete-encased electrode.

(See Figure 4-8, which lists some of the different types of grounding electrodes.)

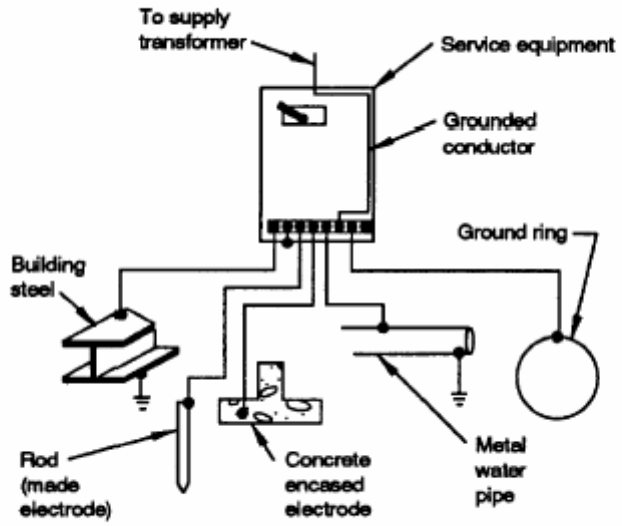

NEC Section 250.50

Figure 4-8. If the building steel, metal water pipe, concrete-encased electrode, and ground ring are available, they must be grounded and bonded to the service equipment to create the grounding electrode system.

4.14 GROUND-FAULT PROTECTION OF EQUIPMENT

See Section 2.7 for ground fault circuit interrupters for personnel protection. An increased degree of protection in solidly grounded systems can be achieved in providing ground-fault protection that will shunt trip circuit protective devices when user-selected levels of ground fault or leakage current flow are detected in electrical circuits. This is required to be installed on all solidly grounded wye services of more than 150 V to ground but not exceeding 600 V phase-to-phase where the service disconnecting means is rated at 1,000 A or more (See Figure 3-1).

4.15 PERSONNEL PROTECTIVE GROUNDS

Personnel working on or close to deenergized lines or conductors in electrical equipment should be protected against shock hazard and flash burns that could occur if the circuit were inadvertently reenergized. Properly installed equipotential protective grounds can aid in

lessening such hazards by providing additional protection to personnel while they service, repair, and work on such systems. (See Section 7.5).

4.15.1 PURPOSE OF PERSONNEL PROTECTIVE GROUNDS

Personnel protective grounds are applied to deenergized circuits to provide a low-impedance path to ground should the circuits become reenergized while personnel are working on or close to the circuit. In addition, the personnel protective grounds provide a means of draining off static and induced voltage from other sources while work is being performed on a circuit. (Figure 4-9 illustrates an example of a personnel protective ground.)

4.15.2 CRITERIA FOR PERSONNEL PROTECTIVE GROUNDS

Before personnel protective grounds are selected, the following criteria shall be met for their use, size, and application.

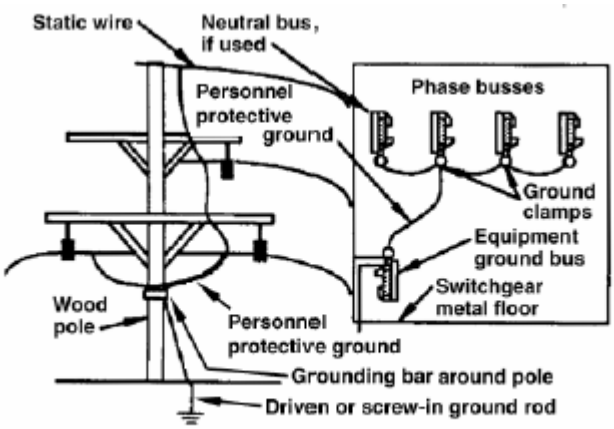

OSHA Sects. 29 CFR 1910.269(n) and 1926.954(t)

Figure 4-9. Equipotential personnel protective grounds are used to protect electrical workers while they service, repair, or are close to circuits that can be accidentally reenergized.

1. A grounding cable shall have a minimum conductance equal to #2 AWG copper.

2. Grounding cables shall be sized large enough to carry fault current long enough for the protective devices to sense and the circuit breaker to clear the fault without damage to cable insulation. An example would be a 4/0 Neoprene-insulated welding cable that will pass 30,000 A for 0.5 sec without melting its insulation.

3. The following are factors that contribute to adequate capacity:

   a. Terminal strength depends on the ferrules installed on the cable ends

   b. Cross-sectional area to carry maximum current without melting

c. Low resistance to keep voltage drop across the areas in which personnel are working at a safe level during any period to prevent reenergization. The voltage drop should not exceed 100 volts for 15 cycle or 75 volts for 30 cycle clearing times.

d. Verify that the grounding cable and clamp assembly is tested periodically by using the millivolt drop, micro-ohm meter, AC resistance, or DC resistance test methods. For example, if it is desired to maintain a maximum of 100 volts across a worker whose body resistance is 1000 ohms, during a fault of 1000 amperes, a personnel protective ground resistance of 10 millohms or less is required.

4. For further information on the construction of personnel protective grounds, refer to Section 7.5.

4.15.3 GROUNDING CLAMPS

Grounding clamps used in personnel protective grounds are manufactured specifically for this use. The size of grounding clamps shall match the size of conductor or switchgear bus being grounded.

The ground clamp also shall be rated to handle the full capacity of the available fault currents. Fault currents can typically range in magnitude up to over 200,000 A.

4.15.4 SCREW-TIGHTENING DEVICES

Approved screw-tightening devices designed for the purpose of pressure metal-to-metal contact are required for connections to an adequate system ground.

4.15.5 GROUNDING CABLE LENGTH

Grounding cables should be no longer than is necessary, both to minimize voltage drop and to prevent violent movement under fault conditions. For example, as a general rule, grounding cables should not exceed 30 ft for a transmission line and 40 ft for substation use.

4.15.6 GROUNDING CABLE CONNECTION

Grounding cables shall be connected between phases to the grounded structure and to the system neutral to minimize the voltage drop across the work area if the circuit should become inadvertently reenergized. Workers shall install the ground end clamp of a grounding cable first and remove it last.

4.15.7 CONNECTING GROUNDING CABLES IN SEQUENCE

Grounding cables shall be connected to the ground bus, structure, or conductor first, then to the individual phase conductors. The first connection of the grounding cables to the circuit phase conductors shall be to the closest phase of the system and then to each succeeding phase in the order of closeness.

4.15.8 REMOVING PROTECTIVE GROUNDS

When removing personnel protective grounds, reverse the order they were applied to the phases. The grounding cable conductors attached to the ground bus, structure, or conductors shall always be removed last.

4.15.9 PROTECTIVE APPAREL AND EQUIPMENT

Protective apparel shall be worn when applying or removing grounds. An insulating tool (hot stick) shall be used to install and remove grounding cables.

Protective apparel (personnel protective equipment) should include at least the following:

1. Safety glasses and, if necessary, face shield appropriate for fault currents available.

2. Hardhat (Class B) (See 2.12.3)

3. Appropriate electrical gloves and protectors (See 2.12.3).

4. Appropriate clothing (See note in 2.11.3).

5.0 SPECIAL OCCUPANCIES

This section covers the specific requirements and information for installing electrical equipment and wiring in explosive and hazardous locations and underground facilities. Classifications of areas or locations with respect to hazardous conditions are discussed. Information is provided on the correct methods and techniques needed for system grounding, lightning protection, and controlling of static electricity.

This section references DOE, NFPA and DOD standards. These standards and manuals should be referenced to ensure safe and reliable installations of electrical equipment and wiring methods in explosive and hazardous locations.

5.1 EXPLOSIVES

This section references DOE M440.1-1, “DOE Explosives Safety Manual,” NFPA 70 (NEC), NFPA 77, NFPA 780, and DOD 6055.9-STD, “DOD Ammunition and Explosives Safety Standards.” These standards and manuals should be referenced to ensure safe and reliable installations of electrical equipment and wiring methods in explosive and hazardous locations.

5.1.1 EVACUATION

Whenever an electrical storm approaches, personnel shall exit any location where a hazard exists from explosives being detonated by lightning. Evacuation may be necessary from locations listed below:

1. All outdoor locations, locations in buildings that do not have lightning protection, and locations within inhabited building distance of the hazard. (When an electrical storm is imminent, work with explosives operations shall not be undertaken.)

2. Locations (with or without lightning protection) where operations use electrostatic-sensitive bulk explosives or electroexplosive devices (EEDs).

5.1.2 SHUTDOWN OF OPERATIONS

The following guidelines shall be used for shutdown of an operation during an electrical storm:

1. Process equipment containing explosives shall be shut down as soon as safety permits.

2. When buildings or bays containing explosives are evacuated, functions that cannot be shut down immediately shall be operated by the minimum number of personnel required for safe shutdown. When the operation has been brought to a safe condition, those remaining shall evacuate.

3. Automatic emergency power equipment shall be provided if electrical power is critical to an explosives operation during a power shutdown or interruption.

5.1.3 LIGHTNING PROTECTION

It is DOE policy to install lightning protection on all facilities used for storage, processing, and handling of explosive materials where operations cannot be shut down and personnel

evacuated during electrical storms. Specific operations shall be assessed for the risk of detonation of explosives by lightning. Such assessment shall consider the need for the protection factors outlined in Appendix I, NFPA 780. When risk is high, as in operations with highly sensitive electrostatic materials or components, operations shall be conducted only in lightning-protected facilities. Approved lightning protection systems shall conform with the requirements of Appendix I, NFPA 780.

Lightning-protection systems should be visually inspected every 7 months and a report on their conditions filed at least annually. Any evidence of corrosion, broken wires or connections, or any other problem that negates the system's usefulness shall be noted and the problem repaired.

Lightning protection systems should be tested electrically every 14 months to ensure testing during all seasons, or immediately following any repair or modification. The testing shall be conducted only with instruments designed specifically for earth-ground system testing. The instruments shall be able to measure 10 ohms ±10°10 for ground resistance testing and 1 ohm ±10°10 for bonding testing. Electrical resistance readings shall be recorded.

Inspection records shall contain the most recent electrical test report and any subsequent visual inspection reports for each building with a lightning-protection system.

5.1.4 STATIC ELECTRICITY

Static electricity shall be controlled or eliminated in areas where materials are processed or handled that are ignitable by static spark discharge. This category includes spark-sensitive explosives, propellants, and pyrotechnics, as well as solvent vapors and flammable gases. Approved systems to dissipate static electricity shall conform to the requirements of NFPA 77 and IEEE 142.

5.1.4.1 BONDING AND GROUNDING EQUIPMENT

Bonding straps shall be used to bridge locations where electrical continuity may be broken by the presence of oil on bearings, or by paint or rust at any contact point. Permanent equipment in contact with conductive floors or tabletops is not considered adequately grounded. Static grounds shall not be made to gas, steam, or air lines; dry-pipe sprinkler systems; or air terminals of lightning protection systems. Any ground that is adequate for power circuits or lightning protection is more than adequate for protection against static electricity.

5.1.4.2 TESTING EQUIPMENT GROUNDING SYSTEMS

Grounding systems shall be tested for electrical resistance and continuity when installation is complete and, in the case of active equipment, at intervals to be locally determined. The grounding system shall be visually inspected for continuity (before reactivation of the system) if the equipment has been inactive for more than 1 month. All exposed explosives or hazardous materials shall be removed before testing. During a test for resistance to ground, all equipment, except belt-driven machines, shall be considered as a unit. In measuring the total resistance to ground for belt-driven machinery (to ensure compliance with Section 5.1.4.3), resistance of the belt is to be excluded. All conductive parts of equipment shall be grounded so that resistance does not exceed 25 ohms, unless resistance is not to exceed 10 ohms because of the lightning protection system. For existing equipment, the rate of static electricity generation shall be considered before changes are made in grounding systems. The resistance of conductive rubber hose shall not exceed 250,000 ohms.

5.1.4.3 CONDUCTIVE FLOORS, SHOES, MATS, AND WRISTBANDS

Conductive floors and shoes should be used for grounding personnel conducting operations involving explosives that have an electrostatic sensitivity of 0.1 joule or less. Many flammable liquids and air mixtures can be ignited by static discharge from a person. In areas where personnel come close enough to have possible contact with static-sensitive explosives or vapors, conductive floors shall be installed except where the hazards of dust-air or flammable vapor-air mixtures are eliminated by adequate housekeeping, dust collection, ventilation, or solvent-recovery methods. Conductive floors may also be required where operations are performed involving EEDs that contain a static-sensitive explosive.

Conductive floors are not required throughout a building or room if the hazard remains localized. In such cases, conductive mats or runners may suffice. These mats or runners shall be subject to all the specifications and test requirements that apply to conductive floors. Conductive wristbands may be substituted for conductive mats and footwear at fixed, grounded workstations or outdoor location.

5.1.4.4 SPECIFICATIONS FOR CONDUCTIVE FLOORS AND WRISTBANDS

Conductive floors shall be made of nonsparking materials such as conductive rubber or conductive flooring material and shall meet the following requirements:

1. The flooring and its grounding system shall provide for electrical resistance not to exceed 1,000,000 ohms (measured as specified in Section 5.1.4.5).

2. The surface of the installed floor shall be reasonably smooth and free from cracks. The material shall not slough off, wrinkle, or buckle under operating conditions. Conductive tiles are not recommended for use in areas where contamination can be caused by explosive dust. The large number of joints and the tendency of tiles to loosen provide areas where explosive dust can become lodged and that are not easy to clean with normal cleaning procedures.

3. Where conductive floors and shoes are required, resistance between the ground and the wearer shall not exceed 1,000,000 ohms, which is the total resistance of conductive shoes on a person plus the resistance of floor to ground. Where conductive floors and shoes are required, tabletops on which exposed explosives or dust are encountered shall be covered with a properly grounded conductive material meeting the same requirements as those for flooring.

4. Conductive floors shall be compatible with the explosive materials to be processed.

5. Conductive wristbands shall not exceed a resistance of 1,000,000 ohms between the wearer and ground. This resistance shall be measured with a suitably calibrated ohmmeter. Wristbands shall be of a design that maintains electrical contact with the wearer when tension is applied to the ground lead wire or the wristband is placed under strain.

5.1.4.5 CONDUCTIVE FLOOR TEST

Before use, tests shall be conducted on all conductive floors; subsequent tests shall be made at least semiannually. Test results shall be permanently recorded and a copy filed in a central

location. Instruments used in testing shall be used only when the room is free from exposed explosives and mixtures of flammable gases.

Maximum floor resistance shall be measured with a suitably calibrated insulation resistance tester that operates on a normal open-circuit output voltage of 500 V do and a short-circuit current of 2.5 mA with an effective internal resistance of approximately 200,000 ohms. Minimum floor resistance shall also be measured with a suitably calibrated ohmmeter.

Each electrode shall weigh 2.3 kg and shall have a dry, flat, circular contact area 6-1/2 cm in diameter, which shall comprise a surface of aluminum or tinfoil 1.3 to 2.5 mm thick, backed by a layer of rubber 0.6 to 0.65 cm thick, and measuring between 40 and 60 durometer hardness as determined with a Shore Type A durometer.

The floor shall be clean and dry. Only electrode jelly shall be used to establish a good contact. (Brushless shaving soap and saline solution shall not be used.)

The resistance of the floor shall be more than 5,000 ohms in areas with 110-V service, 10,000 ohms in areas with 220-V service, and less than 1,000,000 ohms in all areas, as measured between a permanent ground connection and an electrode placed at any point on the floor and also as measured between two electrodes placed 3 ft apart at any points on the floor. Measurements shall be made at five or more locations in each room. If the resistance changes appreciably during a measurement, the value observed after the voltage has been applied for about 5 sec shall be considered the measured value. (See Figure 5-1.)

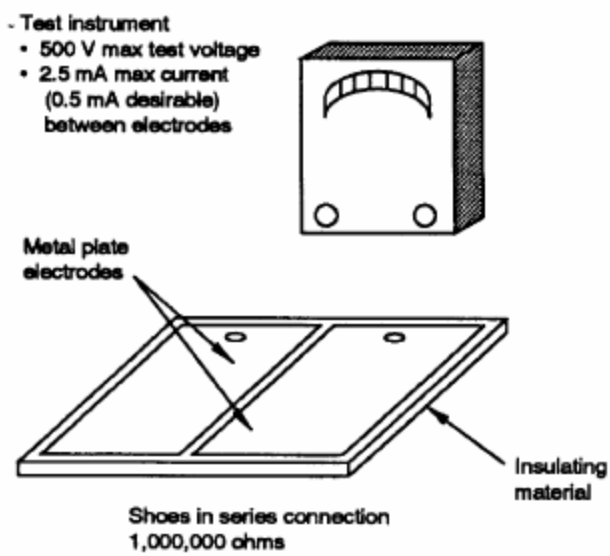

Figure 5-1. Testing shoes on wearer.

5.1.4.6 HUMIDIFICATION

Humidification to prevent accumulations and subsequent discharges of static electricity is usually effective if the relative humidity is above 60%. However, certain materials such as metallic powders and some pyrotechnic mixtures cannot be exposed to air with 60% relative

humidity because of the possibility of their spontaneous ignition. Where this technique is used to prevent accumulations of static electricity, a daily check of the humidity levels will be performed before work starts.

5.1.4.7 GROUND-FAULT CIRCUIT INTERRUPTER

Ground-fault circuit interrupter (GFCI) protection shall be provided in static-grounded areas where personnel are using hand-held, portable, ac-powered electrical equipment operating at 120 V.

5.1.5 ELECTRICAL EQUIPMENT AND WIRING

Electrical equipment and wiring in locations containing explosives shall comply with relevant provisions of the NEC and DOE regulations, plus the requirements in this section.

5.1.5.1 PERMANENT EQUIPMENT AND WIRING

The NEC and this section are minimum requirements for DOE facilities containing explosives. Though the NEC does not specifically address explosives, Article 500, "Hazardous (Classified) Locations," does establish requirements for the design and installation of electrical equipment and wiring in locations containing combustible dusts and flammable liquids, vapors, or gases that in general are comparably hazardous. All permanent electrical equipment and wiring in work areas containing explosives hazards shall conform to the standards of the NEC Hazardous Locations Class II or Class I and II (dual rated). For Class II installations, provisions should be made for easy conversion to Class I.

5.1.5.2 HAZARDOUS LOCATIONS

NEC definitions of and requirements for hazardous locations Class I and Class II are modified as follows for application to DOE explosives facilities:

1. Areas containing explosive dusts or explosives which may, through handling or processing, produce dust capable of being dispersed in the atmosphere shall be regarded as Class II Division 1 hazardous locations.

2. Areas that contain exposed explosives but where no dust hazard exists shall be regarded as Class 11 Division 2 hazardous locations.

3. Suitable NEMA rated enclosures shall be provided in those locations where water/ explosives mixtures may contact electrical equipment and wiring.

4. Areas where explosives are processed and sublimation may occur or where flammable gases or vapor may be present in quantities sufficient to produce explosive or ignitable mixtures shall be regarded as Class I Division 1 and Class II Division 1 hazardous locations.

5. To ensure a location is assigned to the proper hazardous location class and division, it is necessary to know the properties of the explosives involved there, including, at a minimum, sensitivity to heat and spark and thermal stability. If the properties of an explosive area are such that Class II Group G equipment provides inadequate surface temperature limits, special protection shall be provided or the equipment excluded from the hazardous location. This equipment shall not have a surface temperature exceeding the lowest onset of the

exotherm of the explosive as determined by the differential thermal analysis test or the differential scanning calorimetry test. When NEC Class I or II equipment is not available, the substitute equipment shall be purged or sealed to prevent explosives contamination, shall be determined intrinsically safe by facility management, or shall be administratively controlled. If the equipment is purged, it shall be monitored for flow.

6. Areas that contain explosives that are not defined as hazardous locations (areas containing no dust, vapor, gas hazards, or exposed explosives; for example, storage magazines), shall be evaluated and documented by facility management to ensure that electrical ignition sources are minimized or shall be regarded as NEC Class II.

7. Procedures shall be established by each DOE facility to control the use and modification of electrical equipment in explosives areas and ensure that uniform standards are adhered to throughout the facility.

5.1.5.3 ELECTRICAL SUPPLY SYSTEMS

There may be multiple hazards where explosives facilities are located near electrical supply lines. To protect against these hazards, the NESC (ANSI/IEEE C2) and the following requirements apply to all new construction or major modification and should be considered for existing facilities:

1. Electric lines serving explosive facilities shall be installed underground from a point not less than 50 ft from such facilities. This also applies to communications and instrumentation lines and security alarm systems.

2. Electric service lines required to be close to an explosives facility shall be no closer to that facility than the length of the lines between the poles or towers supporting the lines, unless an effective means is provided to ensure that broken, energized lines cannot come into contact with and present a hazard to the facility or its appurtenances.

3. Unmanned electrical substations shall be no closer to explosives facilities than public traffic route distances.

4. Electric transmission lines (carrying 69 kV or more) and the tower or poles supporting them shall be located not closer to explosives than:

    a. Inhabited-building distance if the line in question is part of a system serving a large, offsite area.

    b. Public traffic route distance if loss of the line shall not create serious social or economic hardships.

    c. Underground utility separation distance criteria found in Table 5-1.

Table 5-1. Quantity-distance separation for protection of underground service installations[a]

Quantity of explosive (maximum pounds)	Distance, m (ft)	
100	26	(80)
200	26	(80)
500	26	(80)
1,000	26	(80)
2,000	26	(80)
5,000	26	(80)
10,000	26	(80)
20,000	28	(85)
50,000	36	(110)
100,000	46	(140)
250,000	62	(190)

[a] If the planned building is designed to contain the effects of an explosion, the formula D (distance) = 3.0 $w^{1/3}$ (w=weight) can be used to determine separation distances for less than 20,000 lb.

5.1.5.4 BUILDING SERVICE ENTRANCE

The electrical service entrance for explosives facilities shall be provided with:

1. An intermediate, metal-oxide surge lightning arrester on the primary side of the transformer.

2. Surge arresters and surge capacitors on the supply side of the main service disconnect.

3. Interconnected grounding between the lightning arrester, surge arrester, surge capacitors, service entrance ground, and building ground.

5.1.6 TESTING

Certain provisions shall be complied with before tests are performed. Qualified personnel shall be used to determine the time and procedure of the test.

5.1.6.1 TEST SETUP

In setting up a test at a firing site, all preparatory work shall be completed before explosives are received. Such work shall include the following items:

1. Checking all firing site safety devices at regular intervals. Such safety devices include warning lights, door and gate firing circuit interlocks, emergency firing circuit cutoff switches, and grounding devices (including those that are remote from the firing bunker).

2. Completing all firing pad and shot stand setup work that requires power tools or other potential spark-producing devices. The firing pad shall be cleared of all unnecessary gear. Special precautions and procedures shall be developed and implemented if power tools or other spark-producing devices are needed after the explosive has been received at the firing pad.

3. If a special structure is required, as much work as possible shall be accomplished on it, including assembly of all materials.

4. When possible, all diagnostic equipment shall be set up and checked, and dry runs shall be performed.

5.1.6.2 PIN SWITCHES AND OTHER NONINITIATING CIRCUITS

Whenever pin switches and other noninitiating circuits are to be checked (such as for charging current or leakage) and are in contact with or close to explosives, the check shall be performed remotely. Other noninitiating electrical circuits include strain gauges, pressure transducers, and thermocouples, which may be affixed to or close to the explosives within an assembly. If a continuity-only (resistance) check is desired, this may be accomplished as a contact operation with an electrical instrument approved for use with the particular explosive device. When low-firing current actuators are involved, it may be advisable to conduct these tests remotely.

5.1.6.3 LIGHTNING STORMS

All operations in open test-firing areas shall be discontinued during lightning storms when explosives are present. Completion of a test after receipt of a lightning alert should be allowed only if test preparation has progressed to the extent that discontinuance of testing would represent a greater personnel risk than would completion of testing.

5.1.6.4 LOW-ENERGY ELECTROEXPLOSIVE DEVICES

When using hot-wire or low-energy EEDs for a test firing, the following requirements shall be applied:

1. Establishment of procedures to ensure that RF, FM, and TV transmitters having sufficient output energy to initiate an EED at the test site are either restricted to a safe distance from the site or not operated. Tables 5-2, 5-3, and 5-4 specify minimum safe distances for the various types of transmitters at several output power levels.

2. Blasting caps and other low-firing current igniters or detonators shall be kept separate from explosives at all times, except during actual test charge assembly and setup.

Table 5-2. Minimum safe distances between radio frequency (RF) transmitters and electric blasting operations.

Transmitter power (watts)	Minimum Safe Distances (ft)	
	Commercial AM broadcast transmitters	HF transmitters other than AM
100	750	750
500	750	1,700
1,000	750	2,400
4,000	750	4,800
5,000	850	5,500
10,000	1,300	7,600
25,000	2,000	12,000
50,000 [b]	2,800	17,000
100,000	3,900	24,000
500,000 [c]	8,800	55,000

[b] Present maximum power of U.S. broadcast transmitters in commercial AM broadcast frequency range (0.535 to 1.605 MHz).

[c] Present maximum for international broadcast.

Table 5-3. Minimum safe distances between TV and FM broadcasting transmitters and electric blasting operations.

Effective radiation power (watts)	Minimum safe distances (ft)		
	Channels 2-6 & FM	Channels 7-13	UHF
Up to 1,000	1,000	750	600
10,000	1,800	1,300	600
100,000 [b]	3,200	2,300	1,100
316,000 [c]	4,300	3,000	1,450
1,000,000	5,800	4,000	2,000
5,000,000 [d]	9,000	6,200	3,500
10,000,000	10,200	7,400	6,000
100,000,000	-	-	-

[b] Present maximum power, channels 2 to 6 and FM.

[c] Present maximum power, channels 7 to 13.

[d] Present maximum power, channels 14 to 83.

Table 5-4. Minimum safe distances between mobile RF transmitters and electric blasting operations.

Transmitter power (watts)	Minimum safe distances (ft)				
	MF [b]	HF [b]	VHF(1) [b]	VHF(2) [b, c]	UHF [b]
5 [c]	-	-	-	-	-
10	40	100	40	15	10
50	90	220	90	35	20
100	125	310	130	50	30
180 [d]	-	-	-	65	40
250	200	490	205	75	45
500 [e]	-	-	209	-	-
600 f	300	760	315	115	70
1,000 [g]	400	980	410	150	90
10,000 [h]	1,200	-	1,300	-	-

[b] MF	1.6 to 3.4 MHz	Industrial
HF	28 to 29.7 MHz	Amateur
VHF(1)	35 to 44 MHz	Public use
	50 to 54 MHz	Amateur
VHF(2)	144 to 148 MHz	Amateur
	150.8 to 161.6 MHz	Public use
UHF	450 to 460 MHz	Public use

[c] Citizens band radio (walkie-talkie), 26.96 to 27.23 MHz and cellular telephones, 3 watts power, 845 MHz; minimum safe distance; 5 ft.

[d] Maximum power for 2-way mobile units in VHF, 15.08- to 161.6-MHz range, and for 2-way mobile and fixed station units in UHF, 450- to 460-MHz range.

[e] Maximum power for major VHF 2-way mobile and fixed-station units in 35- to 44-MHz range.

[f] Maximum power for 2-way fixed-station units in VHF, 150.8- to 161.6-MHz range.

[g] Maximum power for amateur radio mobile units.

[h] Maximum power for some base stations in 42- to 44-MHz band, 1.6- to 1.8- MHz band.

3. The entire wiring system of the explosive charge and of any low-firing-current initiators shall be kept insulated at all times from every possible source of extraneous current. Shunts shall be left on all low-energy initiators or lead wires until actual connections are to be made. Connections shall be taped or otherwise insulated.

4. Test unit low-firing-current actuators or detonators shall be clearly marked. No contact operations involving electrical testing shall be permitted on this type of unit unless an electric meter for the specific application is used.

5.1.6.5 WARNING SIGNALS

Each DOE explosives testing facility shall use standard audible signals to warn personnel of any impending firing in a test area. Signals shall be established by each facility and approved by facility management.

5.1.6.6 FIRING LEADS

All detonator lead wires shall be electrically insulated. Firing leads or cables of low-energy detonators for explosive assemblies shall be kept properly shorted during setup on the firing point.

5.1.6.7 ELECTRICAL TESTING INSTRUMENTS FOR USE WITH EXPLOSIVES SYSTEMS

Testing instruments shall meet certain criteria and be certified and labeled for the types of testing they are permitted to perform.

5.1.6.7.1 CLASSIFICATION

Testing instruments shall be assigned to categories on the basis of electrical characteristics that affect their safe use with explosives systems. Specifically, instrument categories shall be established so that testing instruments in each category can be safely applied to one or more of the following classes of explosives systems:

1. Low-energy or hot-wire initiators (blasting caps, actuators, squibs, etc.)

2. High-energy initiators (exploding bridgewires, slappers, etc.)

3. Noninitiating electrical circuits.

Testing instruments that do not meet the safety criteria may be used on an explosives system only if the activity is considered a remote operation and adequate personnel shielding or separation distance is provided.

5.1.6.7.2 CERTIFICATION

Each DOE facility using electrical testing instruments on explosives systems shall establish a formal system for reviewing and certifying those instruments. Procedures for marking instruments to show their approved use and restrictions on their use shall also be established, so that every testing instrument is prominently labeled with its approved use and with a warning if there is a restriction on its use.

Inspection and calibration of certified instruments shall be required at prescribed intervals or whenever the instrument is opened for servicing or repair.

Records of all certified testing instruments shall be maintained by each DOE facility using electrical instruments to test explosives systems. These records shall include type, manufacturer, model, electrical specifications, wiring diagrams, and failure mode analyses. The Explosives Safety Committee chairperson shall be notified in writing by DOE facilities when they approve new electrical testing instruments for use with initiating systems. The chairperson shall disseminate this information to all committee members.

5.1.6.7.3 ELECTRICAL TESTING INSTRUMENTS FOR USE WITH INITIATING ELECTRICAL CIRCUITS

Instruments used with electrical initiating circuits connected to electroexplosive devices may be further categorized for use with either low-energy initiators or high-energy initiators. All testing instruments used for this purpose shall be current-limited. Before being used on initiating circuits, every instrument wiring diagram and internal circuitry design shall be analyzed, examined, and certified for the following:

1. The output current through a resistance equivalent to that of the minimum resistance initiator of the class shall not exceed 1 °1o and shall not exceed 10°10 of the no-fire rating for the most sensitive initiator of the class. The current-limiting features of the testing instrument shall be internal to the instrument and shall not depend on the circuit load characteristics.

2. The internal circuitry shall ensure isolation features that require, at a minimum, two independent failure modes before the specified output current can be exceeded.

3. A comprehensive (point-to-point, if possible) wiring check shall be made to ensure that the wiring corresponds to the diagram and that all components are functioning properly and within specifications.

5.1.6.7.4 ELECTRICAL TESTING INSTRUMENTS FOR USE WITH NONINITIATING ELECTRICAL CIRCUITS

Testing instruments in this category are used with electric circuits connected to instruments such as strain gauges, pin switches, pressure transducers, thermocouples, and electrical components that are affixed to or within an assembly with explosives. These instruments shall meet the following requirements:

1. Each use of the testing instrument shall be analyzed to ensure that there is no credible scenario where the normal test energy from the testing instrument can ignite explosive charges or initiators in the test. This testing shall be consistent with Section 5.1.6.7.3.

2. Where a testing instrument is used to make measurements on sensors directly applied to explosives (e.g., bonded strain gauges or pin switches), the testing instrument shall be certified and controlled.

3. Testing instruments shall be prominently marked with restrictions on their use. Many of these testing instruments do not meet the requirements for use with initiating systems and shall be marked to prevent their use on this type of circuit.

5.2 PREVENTION OF EXTERNAL IGNITION AND EXPLOSION

Explosives are hazardous by themselves, but around electricity they become even more dangerous: an arc, spark, or hot surface can easily touch off an explosion. Therefore, the electrical installation shall contain these ignition sources or house them in an area well separated from the explosives storage area.

The electrical installation shall prevent accidental ignition of flammable liquids, vapors, and dusts in the atmosphere. In addition, because portable electrical equipment is often used

outdoors or in corrosive atmospheres, its material and finish should be such that maintenance costs and shutdowns are minimized. (See Figure 5-2.)

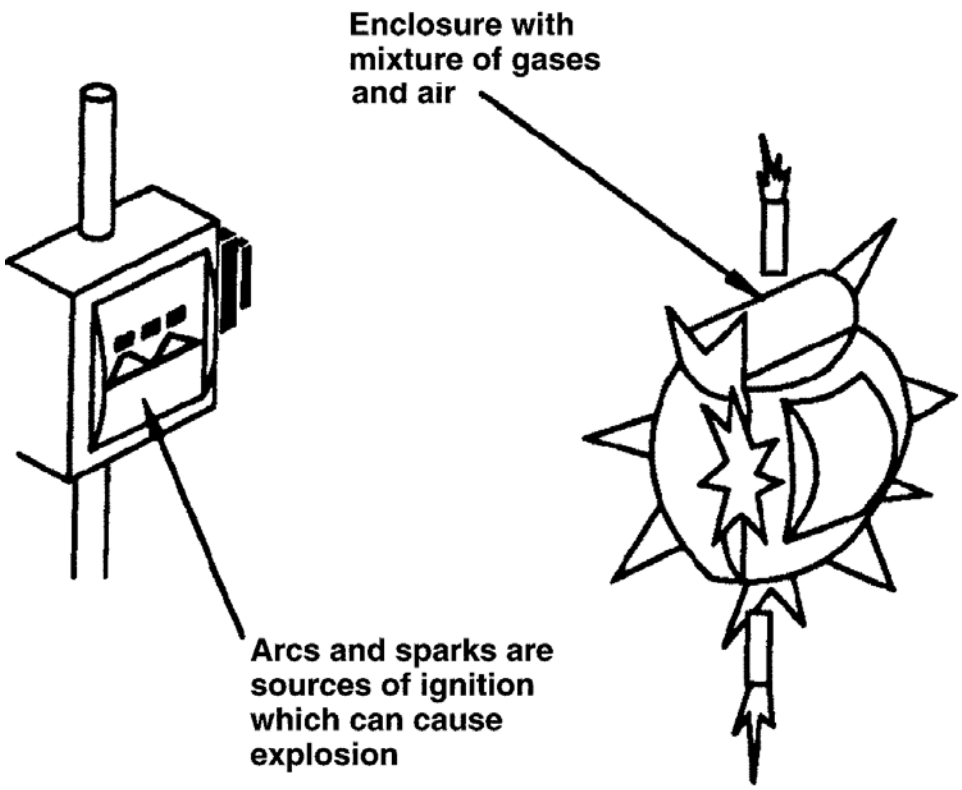

NEC Article 500

Figure 5-2. Arcs and sparks are sources of ignition that produce enough heat to cause an explosion if the air and gas mixture is between the lower and upper flammable limits of the liquid involved.

5.2.1 SOURCES OF IGNITION

When flammable gases or combustible dust are mixed in the proper proportion with air, a source of energy is all that is needed to touch off an explosion. One prime source of energy is electricity. During normal operation, equipment such as switches, circuit breakers, motor starters, pushbutton stations or plugs, and receptacles can produce arcs or sparks when contacts are opened and closed, which can easily cause ignition. Other energy hazards are devices that produce heat, such as lighting fixtures and motors. Surface temperatures of these devices may exceed the safe limits of many flammable atmospheres. Finally, many parts of the electrical system can become potential sources of ignition in the event of insulation failure. Included in this category are wiring (particularly splices), transformers, impedance coils, solenoids, and other low-temperature devices without make-or-break contacts.

Nonelectrical sources such as sparks from metal can also easily cause ignition: a hammer, file, or other tool dropped on masonry or on a nonferrous surface could be a hazard unless it is made of nonsparking material. For this reason, portable electrical equipment is usually made from aluminum or other material that will not produce sparks if it is dropped.

5.2.2 COMBUSTION PRINCIPLES

The following three basic conditions are necessary for a fire or explosion to occur:

1. A flammable liquid, vapor, or combustible dust is present in sufficient quantity.

2. A flammable liquid, vapor, or combustible dust mixes with air or oxygen in the proportion required to produce an explosive mixture.

3. A source of energy is applied to the explosive mixture.

In applying these principles, the quantity of the flammable liquid or vapor that may be liberated and its physical characteristics are taken into account. Also, vapors from flammable liquids have a natural tendency to disperse into the atmosphere and rapidly become diluted to concentrations below the lower explosion limit, particularly when there is natural or mechanical ventilation. Finally, the possibility that the gas concentration may be above the upper explosion limit does not ensure any degree of safety since the concentration first passes through the explosive range to reach the upper explosion limit.

5.2.3 EVALUATION OF HAZARDOUS AREAS

Each area that contains gases or dusts that are considered hazardous shall be carefully evaluated to make certain that the correct electrical equipment is selected. Many hazardous atmospheres are Class I Group D or Class II Group G. However, certain areas may involve other groups, particularly Class I Groups B and C. Conformity with the NEC requires the use of fittings and enclosures approved for the specific hazardous gas or dust involved. The determination of the area classification wiring and equipment selection for Class I, II, and III areas should be made by a person cognizant of the requirements. The determination of the area classification, wiring, and equipment selection for Class I, Zone 0, 1, and 2 areas shall be under the supervision of a qualified registered professional engineer.

5.2.4 INTRINSICALLY SAFE EQUIPMENT

The use of intrinsically safe equipment is primarily limited to process control instrumentation because these electrical systems lend themselves to the low energy requirements. The installation rules are covered in Article 504 of the NEC. The definition of intrinsically safe equipment and wiring is: "Equipment and wiring that are incapable of releasing sufficient electrical energy under normal or abnormal conditions to cause ignition of a specific hazardous atmospheric mixture in its most easily ignited concentration." UL and Factory Mutual list several devices in this category. The equipment and its associated wiring shall be installed so they are positively separated from the nonintrinsically safe circuits. Induced voltages could defeat the concept of intrinsically safe circuits.

5.2.5 ENCLOSURES

In Class I Division 1 and 2 locations, conventional relays, contactors, and switches that have arcing contacts shall be enclosed in explosion-proof housings, except for those few cases where general-purpose enclosures are permitted by the NEC. By definition, enclosures for these locations must prevent the ignition of an explosive gas or vapor that may surround it. In other words, an explosion inside the enclosure shall not start a larger explosion outside. Adequate strength is one requirement for such an enclosure. For an explosion-proof enclosure, a safety

factor of 4 is used. That is, the enclosure shall withstand a hydrostatic pressure test of four times the maximum pressure from an explosion within it.

In addition to being strong, the enclosure shall be flame-tight. This term does not imply that the enclosure is hermetically sealed but rather that the joints cool the hot gases resulting from an internal explosion so that by the time they reach the outside hazardous atmosphere, they are too cool to affect ignition. The strains and stresses caused by internal explosive pressures are illustrated in Figure 5-3 (dotted lines indicate the shape that a rectangular enclosure strives to attain under these conditions). Openings in an enclosure strive to maintain the shape of the enclosure. Openings in an explosion-proof enclosure can be threaded-joint type (Figure 5-4) or flat-joint type (Figure 5-5).

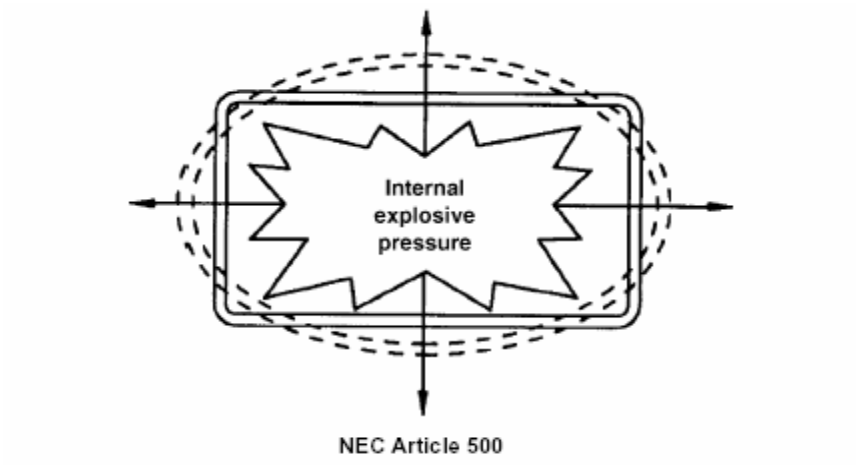

Figure 5-3. The right mixture of air and gases in an enclosure can cause an explosion that creates internal pressures that can rupture the enclosure if not released properly.

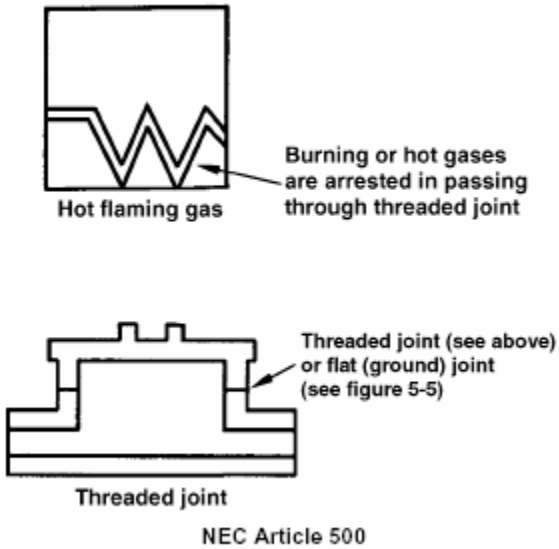

Figure 5-4. Threaded joints can be used as an escape path to cool the hot gases as they pass through the threads to the outside of the enclosure.

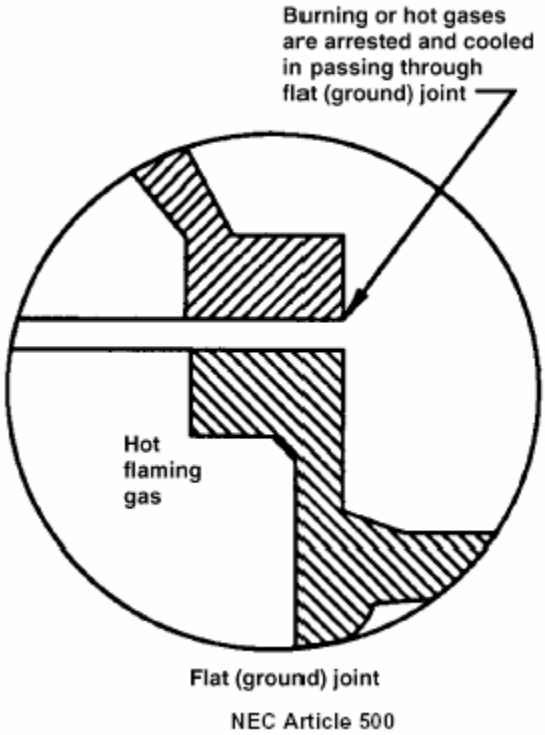

Figure 5-5. Flat (ground) joints can be used as an escape path to cool the hot gases as they pass through the flat (ground) joint.

In Class II locations, the enclosure shall keep dust out of the interior and operate at a safe surface temperature. Because there will be no internal explosions, the enclosure may have thinner wall sections. The construction of these enclosures is known as dust-ignition-proof.

5.2.6 PURGING/PRESSURIZATION SYSTEMS

Purging/pressurization systems permit the safe operation of electrical equipment under conditions of hazard for which approved equipment may not be commercially available. For instance, most switchgear units and many large motors do not come in designs listed for Class I Groups A and B. Whether cast-metal enclosures or sheet-metal enclosures with pressurization should be used for hazardous locations is mainly a question of economics, if both types are available. As a typical example, if an installation had many electronic instruments that could be enclosed in a single sheet-metal enclosure, the installation lends itself to the purging/pressurization system. However, if the electronic instruments require installation in separate enclosures, use of the cast metal in hazardous-location housing would almost invariably prove more economical. Pressurized enclosures require:

1. A source of clean air or inert gas

2. A compressor to maintain the required pressure on the system

3. Pressure control valves to prevent the power from being applied before the enclosures have been purged and to deenergize the system should pressure fall below a safe value.

In addition, door-interlock switches are required to prevent access to the equipment while the circuits are energized. All of these accessories can add up to a considerable expenditure. For a detailed description of purging/pressurizing systems see NFPA 496, "Purged and Pressurized Enclosures for Electrical Equipment in Hazardous Classified Locations."

5.3 HAZARDOUS LOCATIONS

Hazardous areas and locations are classified by group, class, and division. These classifications are determined by the atmospheric mixtures of various gases, vapors, dust, and other materials present. The intensity of the explosion that can occur depends on concentrations, temperatures, and many other factors that are listed in NFPA codes.

Hazardous locations must be well understood by anyone designing, installing, working on, or inspecting electrical equipment and wiring in such areas. Such locations carry a threat of flammable or combustible gases, vapors, or dusts being present some or all of the time.

Information in this section will assist in classifying areas or locations with respect to hazardous conditions, whether from atmospheric concentrations of hazardous gases, vapors, and deposits, or from accumulations of readily ignitable materials.

This section covers the requirements for electrical equipment and wiring in locations that are classified according to the properties of the flammable vapors, liquids, or gases or combustible dusts that may be present and the likelihood that a flammable or combustible concentration is present. The hazardous (classified) locations are assigned the following designations:

1. Class I Division 1
2. Class I Division 2
3. Class II Division 1
4. Class II Division 2.
5. Class I, Zone 0, Zone 1, Zone 2

Class III fibers and flyings are not covered in this section:

5.3.1 CLASS I

Class I locations are identified in the NEC as those in which flammable gases or vapors are or may be present in the air in amounts sufficient to create explosive or ignitable mixtures. Gases or vapors may be continuously or intermittently present. However, if a gas or vapor is present, there is a potential that a flammable mixture will be present.

From an engineering standpoint, greater precautions are needed if a particular set of conditions is likely to occur (e.g., the presence of a flammable mixture within the explosive range) than if it is unlikely. This is the reason for dividing hazardous locations into two divisions.

5.3.1.1 DIVISION 1

NEC Section 500-5 defines Class I Division 1 hazardous locations as those in which:

1. Ignitable concentrations of flammable gases, liquids, or vapors can exist under normal operating conditions;

2. Ignitable concentrations of such gases or vapors may exist frequently because of repair or maintenance operations or because of leakage; or

3. Breakdown or faulty operation of equipment or processes might release ignitable concentrations of flammable gases, liquids, or vapors and might also cause simultaneous failure of electrical equipment.

Note: In each case, ignitable concentrations are mentioned. This means concentrations between the lower and upper flammable or explosion limits (see Section 5.3.5 and Table 5-5).

The fine-print note to NEC Section 500-5 (B)(1) describes a number of areas and occupancies normally classified as Class I Division 1 locations.

Table 5-5. Class I Division 1 and Class I Division 2 summary of selected hazardous atmospheres

Group[3]	Atmosphere	Ignition[1] Temp. °F	Ignition[1] Temp. °C	Ignition[2] energy (millijoules)	Flammable limits[3] (% by volume) Lower	Flammable limits[3] (% by volume) Upper	Flashpoint[3] °F	Flashpoint[3] °C	NEMA enclosure[4] classification Indoor	NEMA enclosure[4] classification Outdoor
A	Acetylene	581	305	0.017	2.5	100.0	Gas	Gas	7	8
B	1,3-butadiene	788	420	-	2.0	12.0	Gas	Gas	7	8
B	Ethylene oxide	804	429	-	3.0	100.0	-20	-28	7	8
B	Hydrogen	968	520	0.017	4.0	75.0	Gas	Gas	7	8
B	Manufactured gas containing more than 30% hydrogen by volume	-	-	-	-	-	-	-	-	-
B	Propylene oxide	840	449	-	2.6	36.0	-35	-37	7	8
C	Acetaldehyde	347	175	-	4.0	60.0	-38	-39	7	9
C	Diethyl ether	320	160	-	1.9	36.0	-49	-45	7	8
C	Ethylene	842	450	0.08	2.7	36.0	Gas	Gas	7	8
C	Unsymmetrical dimethyl hydrazine (UDMH)	480	249	-	2.0	95.0	5	-15	7	8
D	Acetone	869	465	-	2.5	13.0	-4	-20	7	8
D	Acrylonitrile	898	481	-	3.0	17.0	32	0	7	8
D	Ammonia	928	498	-	15.0	28.0	Gas	Gas	7	8
D	Benzene	928	498	-	1.3	7.9	12	-11	7	8
D	Butane	550	288	-	1.6	8.4	Gas	Gas	7	
D	1-butanol	650	343	-	1.4	11.2	98	37	7	8
D	2-butanol	761	405	-	1.7@212°F	9.0@212°F	75	24	7	8
D	n-butyl acetate	790	421	-	1.7	7.6	72	22	7	8
D	Cyclopropane	938	503	0.25	2.4	10.4	Gas	Gas	7	8
D	Ethane	882	472	-	3.0	12.5	Gas	Gas	7	8
D	Ethanol	685	363	-	3.3	19.0	55	13	7	8
D	Ethylacetate	800	427	-	2.0	11.5	24	-4	7	8
D	Ethylene dichloride	775	413	-	6.2	16.0	56	13	7	8
D	Gasoline	536 to 880	280 to 471	-	1.2 to 1.5	7.1 to 7	7	8	7	8
D	Heptane	399	204	-	1.05	6.7	-36 to -50	-38 to -46	7	8

Table 5-5. Class I Division 1 and Class I Division 2 summary of selected hazardous atmospheres (continued).

Group[3]	Atmosphere	°F	Ignition[1] Temp.°C	Ignition[2] energy (millijoules)	Flammable limits[3] (% by volume) Lower	Upper	Flashpoint[3] °F	°C	NEMA enclosure[4] classification Indoor	Outdoor
D	Hexane	437	225	-	1.1	7.5	-7	-22	7	8
D	Isoamyl alcohol	662	350	-	1.2	9.0@212°F	109	43	7	8
D	Isoprene	428	220	-	1.5	8.9	-65	-54	7	8
D	Methane	999	630	0.30	5.0	15.0	Gas	Gas	7	8
D	Methanol	725	385	-	6.0	36.0	52	11	7	8
D	Methyl ethyl ketone	759	404	-	1.7@200°F	11.4@200°F	16	-9	7	8
D	Methyl isobutyl ketone	840	449	-	1.2@200°F	8.0@200°F	64	18	7	8
D	2-methyl-l-propanol	780	416	-	1.7@123°F	10.6@202°F	82	28	7	8
D	2-methyl-2-propanol	892	478	-	2.4	8.0	52	11	7	8
D	Naphtha (petroleum)	550	288	-	1.1	5.9	<0	<-18	7	8
D	Octane	403	206	-	1.0	6.5	56	13	7	8
D	Pentane	470	243	-	1.5	7.8	< -40	< -40	7	8
D	1-pentanol	572	300	-	1.2	10.0@212°F	91	33	7	8
D	Propane	842	450	0.25	2.1	9.5	Gas	Gas	7	8
D	1-propanol	775	413	-	2.2	13.7	74	23	7	8
D	2-propanol	750	399	-	2.0	12.7@200°F	54	12	7	8
D	Propylene	851	455	-	2.0	11.1	Gas	Gas	7	8
D	Styrene	914	490	-	1.1	7.0	88	31	7	8
D	Toluene	896	480	-	1.2	7.1	40	4	7	8
D	Vinyl acetate	756	402	-	2.6	13.4	18	-8	7	8
D	Vinyl chloride	882	472	-	3.6	33.0	Gas	Gas	7	8
D	Xylenes 867 to 984		464 to 529	-	1.0 to 1.1	7.6	81 to 90	27 to 32	7	8

Notes:

[1] See NFPA 325 and 497M.

[2] See "Handbook of Fire Protection Engineering", Society of Fire Protection Engineers.

[3] See NFPA 325.

[4] See NEMA 250, "Enclosures for Electrical Equipment."

NEC Article 100 defines a flammable liquid as one that has a flashpoint below 38°C (100°F) or one whose temperature is raised above its flashpoint. Flashpoint is the lowest temperature to which a combustible or flammable liquid may be heated before sufficient vapors are driven off and the liquid will flash when brought into contact with a flame, arc, spark, or another ignition source. (See Section 1-3 of NFPA 497M for more details.)

5.3.1.2 DIVISION 2

NEC Section 500-5(B)(2) defines Class I Division 2 locations as those:

1. In which flammable liquids or gases are handled, processed, or used, but where such materials are normally confined in closed containers or closed systems from which they can escape only in case of accidental rupture or breakdown of such containers or systems or in case of abnormal equipment operation.

2. In which gases or vapors are normally prevented, by positive mechanical ventilation, from forming ignitable concentrations and which might become hazardous through failure or abnormal operation of the ventilating equipment

3. That are adjacent to a Class I Division 1 location and to which ignitable concentrations of gases or vapors might occasionally be transmitted unless such transmittal is prevented by adequate positive-pressure ventilation from a source of clean air, and effective safeguards against ventilation failure are provided.

The fine-print note #2 to NEC Section 500-5 describes a number of areas and occupancies normally classified as Class I Division 2 locations. For example, piping systems without valves, meters, and devices do not usually cause a hazardous condition, even though they carry flammable liquids, because they are considered a contained system. Therefore, the surrounding area can be classified as a Class I Division 2 location.

5.3.2 CLASS II

A Class II location is defined in NEC Section 500 as an area where combustible dust presents a fire or explosion hazard. Class II locations are divided into two divisions based on the normal presence or absence of dust.

5.3.2.1 CLASS II DIVISION 1

A Class 11 Division 1 location is one:

1. In which combustible dust is in the air under normal operating conditions in quantities sufficient to produce explosive or ignitable mixtures;

2. Where mechanical failure or abnormal operation of machinery or equipment might cause such explosive or ignitable mixtures to be produced and might also provide a source of ignition through simultaneous failure of electrical equipment, operation of protective devices, or other causes; or

3. In which combustible dusts of an electrically conductive nature may be present in hazardous quantities. (See Table 5-6.)

Table 5-6. Summary of typical combustible dust hazardous atmospheres.[a]

Class	Division	Group	Temperature, atmosphere	Covered	Measured	Limiting value
II Combustible dust	1 (Normally hazardous)	E [b]	Atmospheres containing combustible dusts regardless of resistivity, or other combustible dusts of similarly hazardous characteristics having resistivity of less than 10^2 ohm-centimeter	Devices not subject to overloads (switches, meters)	Maximum ambient temperature in 40°C ambient with a dust blanket	Shall be less than ignition-temperature dust but not more than: No overload:
		F [b]	Atmospheres containing carbonaceous dusts having resistivity between 10^2 and 10^8 ohm-centimeter	Devices subject to overload (motors, transformers)		E—200°C (392°F) F—200°C (392°F) G—165°C (329°F)
		G [b]	Atmospheres containing dusts having resistivity of 10^8 ohm-centimeter			Possible overload in operation: Normal: E—200°C (392°F) F—150°C (302°F) G—120°C (248°F) Abnormal E—200°C (392°F) F—200°C (392°F) G—165°C (329°F)
	2 (Not normally hazardous)	F	Atmospheres containing dusts having resistivity of 105 ohm-centimeter	Lighting fixtures	Maximum external temperature under conditions of use	
		G	Same as Division 1			

[a] Chart from Crouse-Hinds ECM Code Digest, 1990.

[b] NEMA Enclosures Type 9 shall be used for Class 11 Groups E, F, or G.

5.3.2.2 CLASS II DIVISION 2

A Class II Division 2 location is one where:

1. Combustible dust is not normally in the air in quantities sufficient to produce explosive or ignitable mixtures;

2. Dust accumulations are normally insufficient to interfere with the normal operation of electrical equipment or other apparatus, but where combustible dust may be suspended in the air as a result of infrequent malfunctioning of handling or processing equipment; and

3. Combustible dust accumulations on, in, or in the vicinity of the electrical equipment may be sufficient to interfere with the safe dissipation of heat from electrical equipment or may be ignitable by abnormal operation or failure of electrical equipment. (See Table 5-6.)

5.3.3 GROUPS

Until publication of the 1937 edition of the NEC, Class I hazardous locations were not subdivided; a flammable gas or vapor was classified as presenting a single degree of hazard. It was recognized, however, that the degrees of hazard varied with the substance and that equipment suitable for use where gasoline was handled was not necessarily suitable for use where hydrogen or acetylene was handled.

The difficulty of manufacturing equipment and enclosures for use in hydrogen atmospheres was also recognized, as was the expense of the equipment. It was not logical from an engineering standpoint, for example, to require in gasoline stations use of explosion-proof equipment that was also suitable for use in hydrogen atmospheres. Not only would this unnecessarily increase the cost of the electrical installation in one of the most common types of hazardous locations, but it would also make some types of equipment unavailable. Even today, there are no listed motors or generators suitable for use in Group A or B atmospheres.

5.3.4 IGNITION TEMPERATURE

Ignition temperature of a substance, whether solid, liquid, or gaseous, is the minimum temperature required to initiate or cause self-sustained combustion independently of the heating or heated element.

Ignition temperatures observed under one set of conditions may be changed substantially by a change of conditions. For this reason, ignition temperatures should be viewed only as approximations: Ignition temperatures under one set of conditions may be changed substantially by a change of conditions. Some of the variables known to affect ignition temperatures are percentage composition of the vapor or gas-air mixture; shape and size of the space where the ignition occurs; rate and duration of heating; kind and temperature of the ignition source, catalytic or other effect of materials that may be present; and oxygen concentration. Another variable is the many differences in methods and conditions of testing ignition temperature (size and shape of containers, method of heating, and ignition source).

5.3.5 FLAMMABLE (EXPLOSION) LIMITS

As mentioned in Section 5.3.1.1, in the case of gases or vapors that form flammable mixtures with oxygen, there is a minimum concentration of gas or vapor in air or oxygen below which propagation of flame cannot occur on contact with a source of ignition. There is also a maximum concentration of vapor or gas in air above which propagation of flame cannot occur. These boundary-line mixtures of vapor or gas with air, which if ignited will just propagate flame, are known as the lower and upper flammable or explosion limits and are usually expressed in terms of percentage by volume of gas or vapor in air.

In popular terms, a mixture below the lower flammable limit is too lean to burn or explode and a mixture above the upper flammable limit is too rich to burn or explode.

5.3.6 FLASHPOINT

The flashpoint of a flammable liquid is the lowest temperature at which the liquid gives off sufficient vapor to form, with the air near its surface or within the vessel used, an ignitable mixture. An ignitable mixture is a mixture that is within the flammable range (between upper and lower explosive limits) that is capable of propagating flame away from the source of ignition when ignited. Some evaporation takes place below the flashpoint but not in sufficient quantities to form an ignitable mixture. This term applies mostly to flammable and combustible liquids, although there are certain solids, such as camphor and naphthalene, that slowly evaporate or volatilize at ordinary room temperature or liquids, such as benzene, that freeze at relatively high temperatures and, therefore, have flashpoints while in the solid state.

5.4 ELECTRICAL EQUIPMENT FOR CLASS I, II, AND III AREAS

A wide variety of explosion-proof, ignition-proof electrical equipment is available for Class I, II, and III areas. Selection of such equipment shall fully comply with current NFPA requirements.

Excellent references of manufacturers' electrical equipment available and used in hazardous areas is the Crouse-Hinds ECM Code Digest, or the Appleton NEC Code Review which are based on the current NEC.

5.4.1 SEALS AND DRAINS

Seals are to be provided in conduit and cable systems to minimize the passage of gases or vapors from one portion of the system to another. The seals also keep an explosion from being transmitted and ignition from traveling between sections of the system.

5.4.1.1 SEALS

The following are uses and requirements for seals:

1. They restrict the passage of gases, vapors, or flames from one portion of the electrical installation to another at atmospheric pressure and normal ambient temperatures.

2. They limit explosions to the sealed-off enclosure and prevent precompression or pressure-piling in conduit systems.

3. While it is not a code requirement, many engineers consider it good practice to divide long conduit runs into sections by inserting seals not more than 50 to 100 ft apart, depending on the conduit size, to minimize the effects of pressure-piling. Sealing fittings are required.

4. At each entrance to an enclosure housing with an arcing or sparking device when used in Class I Division 1 and 2 hazardous locations, seals must be as close as practicable to and in no case more than 18 in. from such enclosures.

5. At each 2-in. or larger entrance to an enclosure or fitting housing terminals, splices, or taps when used in Class I Division 1 hazardous locations, seals must be as close as practicable to and in no case more than 18 in. from such enclosures.

6. Seals must be located in conduit systems when the conduit leaves the Class I Division 1 or 2 hazardous locations.

7. Seals must be located in cable systems when the cables either do not have a gastight or vapor-tight continuous sheath or are capable of transmitting gases or vapors through the cable core when these cables leave the Class I Division 1 or Division 2 hazardous locations.

NEC Section 502-5 requires the use of seals in Class II locations under certain conditions. Any approved sealing fittings can be used to meet this requirement.

5.4.1.2 DRAINS

In humid atmospheres or in wet locations where it is likely that water can enter the interiors of enclosures or raceways, the raceways should be inclined so that water will not collect in enclosures or on seals but will be led to low points where it may pass out through drains. Frequently the arrangement of raceway runs makes this method impractical if not impossible. In such instances, drain sealing fittings shall be used. These fittings prevent accumulations of water above the seal.

In locations usually considered dry, surprising amounts of water frequently collect in conduit systems. No conduit system is airtight; therefore, it may breathe. Alternate increases and decreases in temperature and barometric pressure because of weather changes or the nature of the process carried on in the location where the conduit is installed will cause breathing. Outside air is drawn into the conduit system when it breathes in. If this air carries sufficient moisture, it will be condensed within the system when the temperature decreases and chills the air. With internal conditions being unfavorable to evaporation, the resultant water accumulation will remain and be added to by repetitions of the breathing cycle. In view of this likelihood, it is good practice to ensure against such water accumulations and probable subsequent insulation failures by installing drain sealing fittings with drain covers or inspection covers even though conditions prevailing at the time of planning or installing may not indicate the need.

5.4.1.3 SELECTION OF SEALS AND DRAINS

Different types of seals and drains are made to be used for vertical or horizontal installations and are to be used only for the purpose for which they were designed. Care shall be taken when selecting and installing such fittings.

5.4.1.3.1 PRIMARY CONSIDERATIONS

The following primary considerations should be used when selecting seals and drains:

1. Select the proper sealing fitting for the hazardous vapor involved (i.e., Class I Groups A, B, C, or D).

2. Select a sealing fitting for the proper use in respect to mounting position. This is particularly critical when the conduit runs between hazardous and nonhazardous areas. Improper positioning of a seal may permit hazardous gases or vapors to enter the system beyond the seal and to escape into another portion of the hazardous area or into a nonhazardous area. Some seals are designed to be mounted in any position; others are restricted to horizontal or vertical mounting.

3. Install the seals on the proper side of the partition or wall as recommended by the manufacturer.

4. Only trained personnel should install seals in strict compliance with the instruction sheets furnished with the seals and sealing compound. Precautionary notes should be included on installation diagrams to stress the importance of following manufacturer's instruction.

5. The NEC prohibits splices or taps in sealing fittings.

6. Sealing fittings are listed by UL for use in Class I hazardous locations with sealing compound only. This compound, when properly mixed and poured, hardens into a dense, strong mass, which is insoluble in water, is not attacked by chemicals, and is not softened by heat. It will withstand with ample safety factor the pressure of exploding trapped gases or vapor.

7. Conductors sealed in the compound may be approved thermoplastic or rubber insulated type. Both may or may not be lead covered (the lead need not be removed).

Caution: Sealing compounds are not insulating compounds; therefore, they shall not be used as such.

5.4.1.3.2 TYPES OF SEALING FITTINGS

Sealing fittings meet the requirements of NEC when properly installed.

A certain style of sealing fittings are for use with vertical or nearly vertical conduit in sizes from 1/2 through 1 in. Other styles are available in sizes 1/2 through 6 in. for use in vertical or horizontal conduits. In horizontal runs, these are limited to face up openings. Sizes from 1-1/4 through 6 in. have extra-large work openings and separate filling holes so that fiber dams are easy to make. Overall diameter of sizes 1-1/4 through 6 in. is scarcely greater than that of unions of corresponding sizes, permitting close conduit spacings. Other style seals are for use with conduit running at any angle, from vertical through horizontal.

5.5 MANUFACTURERS' DIGEST

Manufacturers produce NEC code digests for selection of seals and drains and provide, by class and division, catalog data and installation diagrams for their use in electrical power and

lighting systems in hazardous areas. The manufacturers' NEC code digests should be in compliance with current NFPA/NEC requirements. The two that are most used are as follows:

1. Crouse-Hinds ECM Code Digest

2. Appleton's NEC Code Review.

5.6 DESCRIPTIONS, FEATURES, AND TEST CRITERIA OF ENCLOSURES FOR HAZARDOUS (CLASSIFIED) LOCATIONS (PER NEMA 250)

Type 7 and 10 enclosures, when properly installed and maintained, are designed to contain an internal explosion without causing an external hazard. Type 8 enclosures are designed to prevent combustion through the use of oil-immersed equipment. Type 9 enclosures are designed to prevent the ignition of combustible dust.

As mentioned earlier, hazardous locations (other than in mines) are classified according to the flammability or combustibility of the materials that may be present and also according to the likelihood that a flammable or combustible concentration is present. For definitions and classifications, see the NEC, Article 500, and NFPA 497M, "Classification of Gases, Vapors and Dust for Electrical Equipment in Hazardous Classified Locations." Descriptions and tests in this standards publication cover equipment that is suitable for installation in locations classified as Division 1 or 2. In Division 2 locations, other types of protections and enclosures for nonhazardous locations may be installed if the equipment does not constitute a source of ignition under normal operating conditions. See the specific sections of Articles 501 through 503 of the NEC.

Intrinsically safe equipment (not capable of releasing sufficient electrical or thermal energy under normal or abnormal conditions to cause ignition of specific hazardous atmospheres) may be installed in any type of enclosure otherwise suitable for the environmental conditions expected. See ANSI/ UL 913, "Intrinsically Safe Apparatus and Associated Apparatus for Use in Class I, 11, III, Division I, Hazardous (Classified) Locations" for detailed requirements.

Purged and pressurized equipment should be installed in enclosures suitable for nonhazardous locations. Hazards may be reduced or eliminated by adequate positive pressure ventilation from a source of clean air in conjunction with effective safeguards against ventilation failure. See NFPA 496, "Purged and Pressurized Enclosures for Electrical Equipment in Hazardous Locations" for detailed requirements.

5.7 TYPE 7 ENCLOSURES

Type 7 enclosures are designed for indoor use in locations classified as Class I Groups A, B, C, or D as defined in the NEC.

5.7.1 DESCRIPTION AND APPLICATION

Type 7 enclosures shall be capable of withstanding the pressures resulting from an internal explosion of specified gases and containing such an explosion sufficiently that an explosive gas-air mixture in the atmosphere surrounding the enclosure will not be ignited. Enclosed heat-generating devices shall not cause external surfaces to reach temperatures capable of igniting

explosive gas-air mixtures in the surrounding atmosphere. Enclosures shall meet explosion, hydrostatic, and temperature design tests.

5.7.2 FEATURES AND TEST CRITERIA

When completely and properly installed, Type 7 enclosures:

1. Provide to a hazardous gas environment a degree of protection from an internal explosion or from operation of internal equipment

2. Do not develop external surface temperatures that exceed prescribed limits for the specific gas corresponding to the atmospheres for which the enclosure is intended when internal heat-simulating equipment is operated at rated load

3. Withstand a series of internal explosion design tests:

   a. That determine the maximum pressure effects of the gas mixture

   b. That determine propagation effects of the gas mixtures.

4. Withstand, without rupture or permanent distortion, an internal hydrostatic design test based on the maximum internal pressure obtained during explosion tests and on a specified safety factor

5. Are marked with the appropriate class and groups for which they have been qualified.

5.8 TYPE 8 ENCLOSURES

Type 8 enclosures are designed for indoor or outdoor use in locations classified as Class I Groups A, B, C, or D as defined in the NEC.

5.8.1 DESCRIPTION AND APPLICATION

Type 8 enclosures and enclosed devices are arranged such that all arcing contacts, connections, and any parts that could cause arcing are immersed in oil. Arcing is confined under the oil such that it will not ignite an explosive mixture of the specified gases in internal spaces above the oil or in the atmosphere surrounding the enclosure. Enclosed heat-generating devices shall not cause external surfaces to reach temperatures capable of igniting explosive gas-air mixtures in the surrounding atmosphere. Enclosures shall meet operation and temperature-design tests. Enclosures intended for outdoor use shall also meet the rain test (See #4 in Section 5.8.2).

5.8.2 FEATURES AND TEST CRITERIA

When completely and properly installed, Type 8 enclosures:

1. Provide, by oil immersion, a degree of protection to a hazardous gas environment from operation of internal equipment

2. Do not develop surface temperatures that exceed prescribed limits for the specific gas corresponding to the atmospheres for which the enclosure is intended when internal equipment is at rated load

3. Withstand a series of operation design tests with oil levels arbitrarily reduced and with flammable gas-air mixtures introduced above the oil

4. When intended for installation outdoors, exclude water when subjected to a water spray design test simulating a beating rain

5. Are marked with the appropriate class and groups for which they have been qualified.

5.9 TYPE 9 ENCLOSURES

Type 9 enclosures are designed for indoor use in locations classified as Class 11 Groups E or G as defined in the NEC.

5.9.1 DESCRIPTION AND APPLICATION

Type 9 enclosures shall prevent the entrance of dust. Enclosed heat-generating devices shall not cause external surfaces to reach temperatures capable of igniting or discoloring dust on the enclosure or igniting dust-air mixtures in the surrounding atmosphere. Enclosures shall meet dust-penetration and temperature-design tests and prevent aging of gaskets (if used).

5.9.2 FEATURES AND TEST CRITERIA

When completely and properly installed, Type 9 enclosures:

1. Provide a degree of protection to a hazardous dust environment from operation of internal equipment

2. Do not develop surface temperatures that exceed prescribed limits for the group corresponding to the atmospheres for which the enclosure is intended when internal equipment is operated at rated load

3. Withstand a series of operation design tests while exposed to a circulating dust-air mixture to verify that dust does not enter the enclosure and that operation of devices does not cause ignition of surrounding atmosphere

4. Are marked with the appropriate class and groups for which they have been qualified.

5.10 UNDERGROUND FACILITIES

Underground facilities consist of electrical equipment and wiring installed in underground locations. Working conditions underground can present to electrical workers hazards different from those presented above ground. This section aids in dealing with such problems.

Electrical work in support of construction of mines, shafts, and underground utilities shall be performed by qualified workers who must meet the requirements in Section 2.8, 30 CFR 75.153 and 77.103. Only those workers shall install equipment and conductors within the construction activity.

Note: DOE does not engage in "mining" as mining is the extraction of minerals for profit. However, the codes related to mining (30 CFR 57, 75, and 77) should be followed, where applicable, along with the OSHA regulations set forth in 29 CFR 1910 and 1926.

Once construction of the underground facilities is completed, all wiring used for construction activities shall be removed and permanent wiring installed in accordance with 29 CFR 1910, Subpart S, and the NEC as applicable. When the work is not covered by these codes as referenced, the applicable paragraphs of 30 CFR 57, 75, and 77 shall prevail.

Electrical equipment and conductors must be used in a manner that prevents shocks and burns to people. Should electrical equipment and conductors present a hazard to people because of improper installation, maintenance, misuse, or damage, the equipment and conductors must be tagged out or locked out as a hazard until fixed. All electrical equipment and conductors shall be chosen and situated in environments conducive to their design and intended use or as tested by an NRTL for the purpose intended.

The voltage of bare conductors, other than trolley conductors, that are accessible to contact by people shall not exceed 50 V. Electrical equipment and conductors, other than trailing cables, shall be protected against overloads and short circuits by fuses or automatic interrupting devices used in accordance with 29 CFR 1910.304.

Adequate clearance between equipment and bare overhead conductors must be maintained in accordance with 29 CFR 1910.303. Conductors not being used to supply power to electrical equipment shall be deenergized and removed from their power supply or have their power supply locked out and tagged out in accordance with 29 CFR 1910.147 and 29 CFR 1910.333. All exposed ends shall be insulated.

Access doors and cover plates shall be closed at all times, except for installation, testing, and repair. Visible signs warning of danger shall be posted at all substations, switch centers, and control centers to warn people against entry unless they have been authorized to enter and perform duties in these locations.

5.10.1 WORK ON ELECTRICAL EQUIPMENT AND CIRCUITS

Before any work is performed on electrical equipment or circuits, the power source or sources shall be deenergized unless power is a required part of the work procedure. Lockout procedures in 29 CFR 1910.147 and 29 CFR 1910.333 shall be followed. In addition, the following rules apply for energized work:

1. Power-cable plugs and receptacles for circuits greater than 150 V potential to ground shall not be connected or disconnected under load unless they are of the load-break type. Energized power cables in excess of 150 V potential to ground shall be handled in accordance with 29 CFR 1910.331. Care shall be taken to prevent damage or shock and burn from the energized cable.

2. Proper tools shall be used to remove or install fuses to protect people from shock or burns.

3. All safety-related electrical work practices covered by the provisions in 29 CFR 1910.331 through .335 shall be followed.

4. Exposed electric connections or resistor grids not protected by location shall be insulated unless impractical. In this case, guarding shall be installed to prevent accidental contact by people or equipment.

5. Communication conductors shall be installed in accordance with 30 CFR 57.12010 and 75.516-2.

6. Lights and lamps shall be properly guarded if they pose a hazard and shall be kept away from combustible material.

5.10.2 GROUNDING

All electric circuits shall have a grounding system. The system shall protect people from injuries or fatal shock on inadvertent contact. The system shall limit the voltage on all electrical equipment with noncurrent-carrying metallic parts. Grounding of ac and do equipment shall be in accordance with 29 CFR 1910.304(f).

Equipment grounding conductors shall comply with the standards expressed in 29 CFR 1910.304(f)(6)(i).

All installations, modifications, or repairs pertaining to grounding systems shall be followed by a continuity test to ensure the integrity of the systems. The frequency and requirements of he review shall conform to 30 CFR 57.12028.

5.10.3 POWER CABLES AND CONDUCTORS

Cables and insulated conductors shall be protected against physical damage, adverse environmental conditions, and failure of adjacent mechanical equipment.

Cables and insulated conductors shall not be supported from or be in contact with pipelines. Sufficient clearance between pipelines and cables is required to prevent shock hazards when maintenance activities are being performed. A minimum clearance of 10 ft above floor level shall be maintained for all overhead cables/conductors overhead not protected against physical damage as set forth in NFPA 70E.

Electric conductors shall be of a size and current carrying capacity to ensure that a rise in ambient temperature does not exceed the rating of the insulation and conductors. The capacities of electric conductors supplying electrical equipment shall be in accordance with the tables set forth in the NEC Article 310. In the case of medium- or high-voltage cable, the manufacturer's ratings shall not be exceeded.

Splices, terminations, and repairs of electric conductors and power cables shall be permitted and shall conform to the requirements expressed in NFPA 70E.

Surge arresters and lightning protection are required for underground facilities and shall conform to the requirements found in 30 CFR 57.12069 and 75.521. Lightning arresters shall be inspected for damage at least annually or after each electrical storm.

Power cables and insulated conductors in shafts and bore holes shall be supported. Support structures and guy wires and supports for cables and conductors shall conform with the requirements expressed in 30 CFR 57.12083.

5.10.4 TRAILING CABLES

Trailing cables used in electrical systems of mines shall meet requirements expressed in 30 CFR 57.12038, 30 CFR 75 Subpart G, and 30 CFR 77, Subparts G.

Each trailing cable of portable and mobile equipment shall have short-circuit and ground-fault protection for each ungrounded conductor. Protective devices shall safely interrupt all ungrounded conductors under fault conditions. Requirements for over current protection of each ungrounded conductor shall be those expressed in 30 CFR 57.12003, 30 CFR 75 Subpart G, and 30 CFR 77, Subpart G.

Trailing cables shall be attached to equipment so that strain on electrical connections does not occur and damage to cable jacket and internal conductor insulation is prevented. Portable distribution boxes can be used and shall meet the requirements in 30 CFR 57.12006 and 57.12007. Trailing cables and power conductors shall be protected against physical damage from mobile equipment by using bridges, trenches, or suspension from the mine roof.

Disconnecting devices for trailing cables shall be equipped with means for attaching a padlock for LO/TO purposes per 30 CFR 57.12016, 57.12017, 75.511, and 77.501.

5.10.5 TROLLEY CIRCUITS FOR TRACK HAULAGE

Trolley wires and exposed trolley-feeder wires shall be installed and maintained in accordance to the requirements in 30 CFR 57.12050, 57.12086, and 30 CFR 75, Subpart K.

Trolley wires and trolley-feeder wires shall be protected against over current in accordance to the requirements of 30 CFR 57.12001 and 75.1001.

Track serving as the trolley circuit return shall be bonded or welded according to the requirements of 30 CFR 57.12042 and 75, Subpart K. Energized trolley wires and exposed trolley-feeder wires shall be guarded in places where accidental contact with them is possible. This includes areas where supplies are stored, loaded, or unloaded.

6.0 REQUIREMENTS FOR SPECIFIC EQUIPMENT

The electrical safety requirements for specific equipment are determined by the following standards:

1. NFPA 70, National Electrical Code (NEC)

2. 29 CFR 1910, Occupational Safety and Health Standards

3. 29 CFR 1926, Safety and Health Regulations for Construction.

4. NFPA 70E, Standard for Electrical Safety in the Workplace.

29 CFR 1910 and 1926 frequently reference other safety guidelines for design, operation, and maintenance. Such other guidelines comprise ANSI, ASTM and IEEE specifications and information derived from various engineering sources or equipment manufacturer association standards. However, the key document is NFPA 70, the NEC; all the other documents are keyed to it. The NEC reflects wiring and installation requirements that provide for a safe electrical system.

6.1 CONVEYING SYSTEMS

Conveying systems are used to move materials, goods, etc., from one place to another. Because of their conditions of use, they are usually classified in service applications as intermittent duty.

6.1.1 GENERAL DESIGN, INSTALLATION, MAINTENANCE, AND INSPECTION REQUIREMENTS

6.1.2 ELECTRICAL DESIGN CRITERIA

Electrical design criteria should be closely coordinated with the architect, structural engineer, fire protection engineer, mechanical engineer, and electrical safety engineer to ensure that all discipline requirements are coordinated and met.

Factory and field performance tests and control and wiring diagrams should be specified in the purchase order or contract because they are not otherwise provided by the factory. Acceptance tests conducted by the factory representative, qualified independent inspector, or engineer are recommended. Tests conducted by Underwriters Laboratory (UL) and Factory Mutual Engineering Corporation (FM) are also acceptable.

ANSI and CMAA standards should be carefully reviewed to ensure that all applicable safety requirements are covered in the specifications.

The designer should specify the following requirements:

1. Available system voltage

2. Control voltage

3. The motor is constructed for the specific application

4. Motor horsepower, service factor, insulation class, and time ratings are sufficient to meet the load requirements

5. Working clearances and space requirements

6. Disconnecting means and other NEC requirements.

6.2 CRANES AND HOISTS

The most significant factor in crane and hoist safety, after structural integrity, is electrical safety. All the referenced standards support this fact either directly or indirectly by the amount of definition and space provided for electrical systems' controls, operations, and maintenance.

6.2.1 NEC GENERAL REQUIREMENTS

Basic installation and wiring safety requirements for cranes and hoists are given in NEC Article 610[1]. Electrical designers and maintenance personnel should thoroughly understand these requirements and their intent. Some of the more significant requirements are the following:

1. Cranes and hoists operated in hazardous (classified) locations shall conform to NEC Article 500.

2. When the crane is operated above readily combustible materials, the resistors must be located in a well-ventilated cabinet constructed of noncombustible material and constructed so that they will not emit flames or molten metal. See the exception (and requirements) that applies to certain cabinets made of noncombustible materials.

3. Cranes and hoists operating on electrolytic cell lines have special requirements, as given in NEC Section 668.

   a. Grounding is not required for conductive surfaces of cranes and hoists that enter the working zone of a cell line, and the parts that come in contact with an energized cell or attachments shall be insulated from ground.

   b. Remote controls that may introduce hazardous conditions into the cell line working zone shall employ one or more of the following:

      (1) Isolated and ungrounded control circuit in compliance with NEC Section 668-21 (a)

      (2) Nonconductive rope operator

      (3) Pendant pushbutton with either non-conductive support and surfaces or ungrounded exposed surfaces.

---

[1] See Appendix D, Reference Matrix.

(4) Radio

6.2.2 DISCONNECTING MEANS

The disconnecting means provided for cranes and hoists may consist of two or more lock-open-type motor circuit switches or circuit breakers. Article 610, Part IV, of the NEC, "Disconnecting Means," and the installation and operating plans should be studied carefully to determine the disconnecting means requirements and locations. The two basic disconnects to consider are:

1. The runway conductor (conductors run along a crane runway for power or control) disconnect shall be installed in accordance with NEC 610.31.

2. The crane and hoist disconnect which shall be provided in the leads from the runway contact conductors or other power supply in accordance with NEC 610.32.

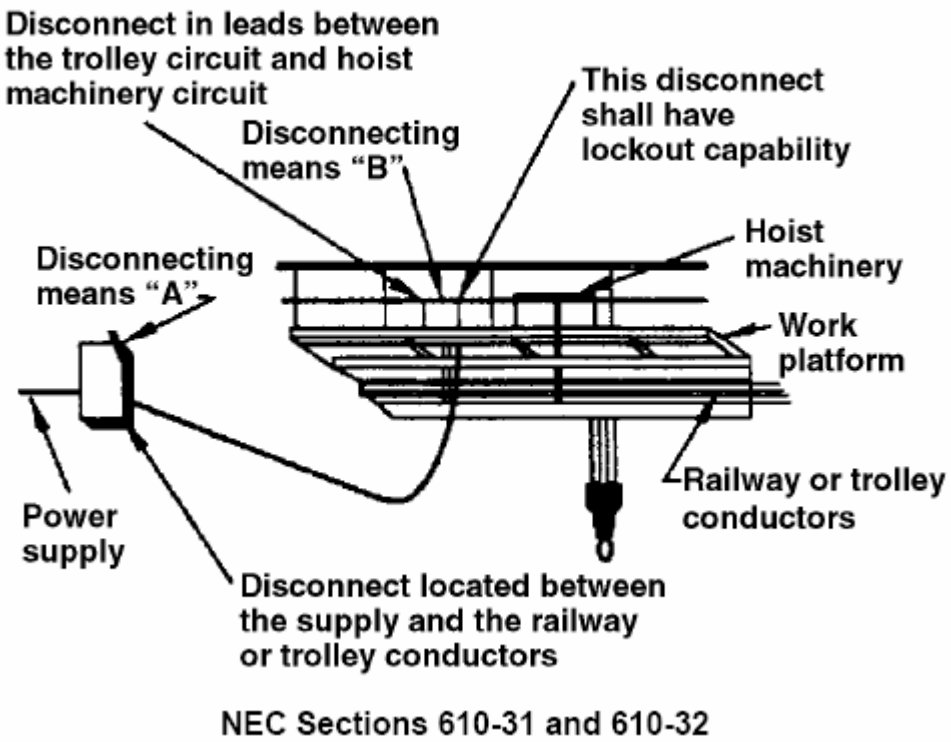

Figure 6-1(a). An additional control switch or a remote control switch is required if the second disconnecting means is not accessible to the operator.

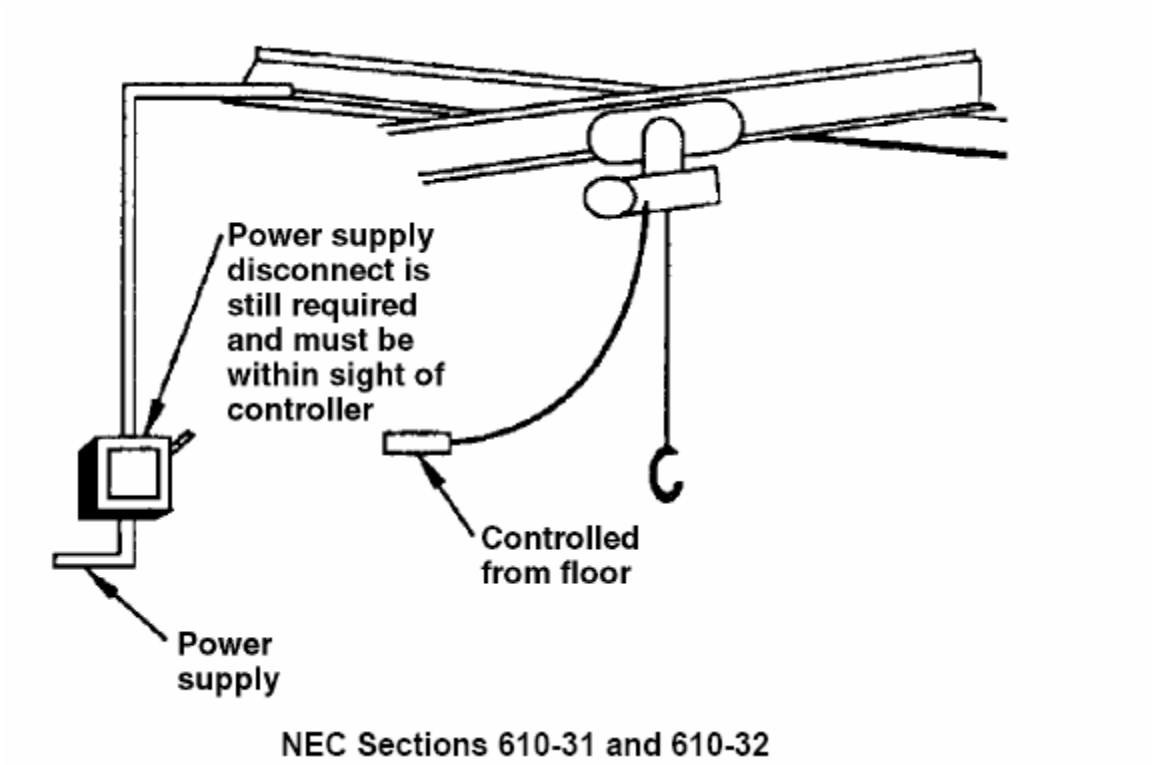

Figure 6-1(b). Second disconnect not required. A monorail hoist does not require a disconnecting means in the leads to the hoist machinery if it is controlled from the floor, if it is within view of the power supply disconnect, and if there is no work platform provided to service the hoist machinery.

6.2.3 GROUNDING

NEC grounding requirements consider the crane or hoist with all its associated equipment, including electrical equipment, as a single piece of equipment; therefore, all the conductive component parts shall be bonded together so that the entire crane or hoist is grounded in compliance with NEC Article 250, Part V, and NEC Section 610. Metal-to-metal contact is required between all surfaces including the trolley wheels and bridge. If any such surfaces are painted or otherwise insulated, a separate bonding conductor is required.

The bonding of all conductive surfaces by metal-to-metal contact is not to be considered as the equipment grounding conductor for the electrical equipment (motors, motor controllers, lighting fixtures, transformers, etc.)on the crane or hoist. The equipment ground conductors that are run with the circuit conductors shall comply with NEC Section 250.

6.2.4 CONTROL

A limit switch is required to prevent the load block from passing the safe upper travel limit on all hoisting mechanisms.

6.2.5 CLEARANCES

In the direction of live parts, the working space clearance is 2-1/2 ft, and doors enclosing live parts that may require service or maintenance shall open at least 90 degrees or be removable.

6.2.6 OSHA AND NEC REQUIREMENTS

29 CFR 1910.179 and NEC Article 610, Part F, provide additional electrical requirements derived from ANSI and other standards. Significant requirements are the following:

1. Control circuit voltage shall not exceed 600 Vac or dc. Pendant pushbutton voltage shall not exceed 150 Vac or 300 Vdc.

2. Support shall be provided for pendant multiconductor cables.

3. Electrical systems for cranes and hoists shall provide failsafe operation. When power fails, all motors shall be automatically disconnected so that they will not resume operation when the power comes back on. Automatic cranes shall not commence motion automatically when the power comes on after an outage. Pendant pushbuttons shall be returned to the off position when pressure is released. When the signal from a remote controller fails, all motion shall stop.

6.2.7 MAINTENANCE AND OPERATIONS

It is important to have a comprehensive electrical maintenance program for cranes and hoists. Every electrical part and circuit plays a critical operational safety role and must be checked and serviced at the frequency and in the manner specified by OSHA, CMAA, ANSI, and the manufacturer's manual. Required weekly, monthly, and semiannual tests and required recordkeeping are contained in ANSI B-30 and CMAA documents.

The basic references for safe operation and maintenance of cranes and hoists are contained in sections of 29 CFR 1910 and 1926.

6.2.8 DOCUMENTED MAINTENANCE

Maintenance checklists and schedules in compliance with OSHA, the owner's manuals, and the manufacturer's requirements for the specific equipment shall be provided as required. Weekly, monthly, and semiannual inspections shall be conducted, and comments and condition of the inspected part shall be documented and certified.

The recommended frequencies of inspections vary in accordance with application, usage, and authority. Frequent inspection and periodic inspection are defined by OSHA as daily to monthly and 1 to 12 months, respectively. Typical inspection frequencies for electrical equipment of cranes and hoists are as follows:

Weekly	Monthly	Semiannually
Brakes	Control Operations	Motors
Pushbuttons	Collectors	Control Panel
Master Switch	Resistors	
Mainline Disconnect Warning Device	Conductors	

The inspection records shall provide an ongoing safety assessment of the equipment and be used to predict repair-part replacement. All inspections shall be dated and initialed by the inspector.

6.2.9 MECHANICAL ELEVATING AND ROTATING EQUIPMENT

The primary electrical safety concern of is work in proximity to live and unguarded electrical overhead lines by uninsulated equipment. Unless these lines are visibly grounded at the point of work and the owner of the lines indicates that they are deenergized, barriers or insulating protective material shall be installed to prevent worker contact with them. The following clearances shall be maintained between equipment and electrical overhead lines:

1. Lines 50 kV or below: 10 ft between the lines and any part of the equipment or load

2. Lines over 50 kV: 10 ft plus 0.4 in. for every 1 kV above 50 kV.

In locations and situations where it is possible that the operator may have difficulty observing that these clearances are being maintained, someone shall be designated to monitor the clearances and provide the operator with timely warning before contact can be made. The use of cage-type boom guards, insulating links, or a proximity sensor shall not alter the electrical safety requirements of 29 CFR 1910.269(p)(4) and 1926.550, even if these devices are required. (See Figure 6-2.)

6.3 ELEVATORS AND ESCALATORS

Elevators and escalators are used to move people and elevators are also used to move materials. Design, installation, inspection, and maintenance activities require specialized knowledge for safe operation and use.

6.3.1 CODES AND STANDARDS

A comprehensive electrical safety program for elevators and escalators can be achieved through the application of the

All elevators are required to be constructed, installed, and maintained in accordance with ANSI/ ASME A17.1. Reference standards include NFPA 70 (NEC) for the electrical equipment wiring

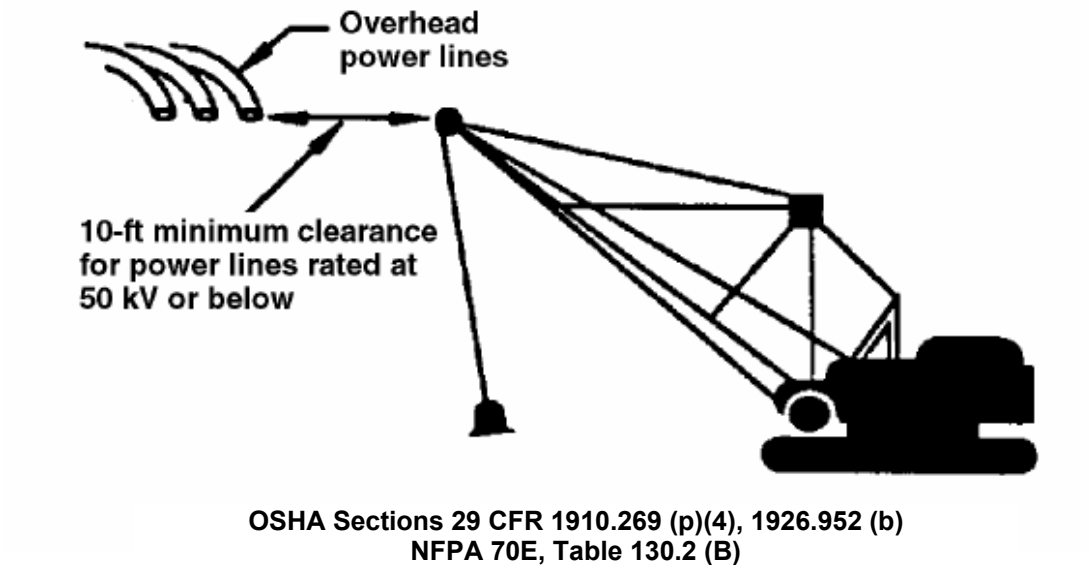

OSHA Sections 29 CFR 1910.269 (p)(4), 1926.952 (b)
NFPA 70E, Table 130.2 (B)

Figure 6-2. A minimum clearance of 10 ft between overhead power lines and equipment is required for 50 kV and below while a clearance of 10 ft plus 4 in. for every kV above 50 kV is required.

and NFPA 101 (Life Safety Code). These standards reflect the interrelated roles of electrical design, maintenance, and fire protection in the electrical safety process.

6.3.2 DESIGN SPECIFICATIONS

The electrical designer shall provide for the installation requirements of Article 620 of the NEC as well as the ANSI/ASME A17.1 requirements for signaling, automatic fire protection, and emergency power as required. The manufacturer shall provide the required fire service key switches, audible alarm devices, and internal wiring up to the terminal strips in the elevator control panel.

6.3.2.1 VOLTAGE AND CURRENT LIMITATIONS

There shall be a 300-V limitation on all operating control and signal circuits and related equipment, including door operators. Exceptions are permitted for 25 to 60 Hz ac if the current cannot under any conditions exceed 8 mA, or for dc voltage if the current cannot, under any circumstances, exceed 30 mA.

6.3.2.2 CONDUCTORS

Hoistway door conductors from the door interlocks to the hoistway riser shall be flame retardant, suitable for a temperature of at least 200°C, and Type SF or equivalent. See Table 400-4 of the NEC for approved types of elevator cables and Note 5 to Table 400-4 concerning special requirements for traveling control and signal cables. Operating control and signal cable conductors may be as small as #24 AWG. Traveling cable conductors must be #20 AWG or larger.

6.3.2.3 DISCONNECTING MEANS

The disconnecting means requirements for elevators and escalators are both specific and extensive, requiring careful study of the codes and installation plans during design, acceptance testing, and routine inspections. Some of the basic requirements of NEC Section 620-51 are the following:

1. There shall be a single means of disconnecting all ungrounded conductors to the main power supply of each unit.

2. A single elevator or escalator, with multiple driving machines, shall have one disconnecting means to disconnect the motors and control valve operating magnets.

3. When there is more than one driving machine in a machine room, the disconnecting means shall be labeled.

4. The disconnect shall be a fused motor circuit switch or circuit breaker capable of being locked open.

5. The disconnect shall not be provided with a means of being operated from a remote location.

6. A circuit breaker disconnecting means shall not be opened automatically by a fire alarm system, except as allowed by NEC.

7. The within-sight rule applies to all elevator equipment disconnects. Specific locations are given for elevators with or without field control.

8. The disconnecting means shall be installed in a location that is readily accessible to only qualified persons.

When power from more than one source is used for single- or multiple-car installations, a separate disconnect should be provided for each source. These disconnects should be in sight of the equipment supplied, and warning signs should be placed on or adjacent to the disconnect to read. For example, "Warning: Parts of the control panel are not deenergized by this switch."

Lighting circuits for each elevator require a disconnect switch in the equipment room labeled for the car it serves and lockable in the open position.

6.3.2.4 MOTORS

Elevator and escalator motors are considered as intermittent duty. This allows them to be protected by the overcurrent protection device supplying the power for the branch circuit, which is selected by the percentages in NEC Table 430-22 times the full load current of the motors. For example: What is the load for a 15-minute rated 40-hp, 460-V, three-phase motor used as a freight elevator motor?

Step 1: Finding full load current — NEC Table 430-150
40 HP = 52 A

Step 2: Finding demand factors — NEC Table 430-22 (a)
15 minute rated = 85%

Step 3: Calculating load
52 A x 85% = 44.2A

Answer: Load is 44.2 amps.

6.3.2.5 GROUNDING

All metal raceways and cables, Types MC, MI, or AC, shall be bonded to the metal frame of the car. All elevator equipment including metal enclosures for electric devices on the car shall be grounded in accordance with NEC Article 250.

6.3.2.6 OVERSPEED PROTECTION

Overspeed protection for overhauling and under-hauling is required, as are motor-generator overspeed requirements that must comply with NEC Section 430-89, Speed Limitation. However, these requirements are a part of the more extensive requirements of ANSI/ASME A17.1 for electrical safety devices, which require scrutiny by designers, maintenance personnel, and inspectors.

6.3.3 EMERGENCY POWER

Emergency power requirements are governed by ANSI/ASME A17.1 Rule 211.2, which requires that the regenerative power of an overhauling elevator prevent the elevator from attaining the lesser of the governor tripping speed or 125% of rated speed. If the elevator power system cannot absorb this power, a load shall be provided on the load side of the elevator power disconnect switch. If an emergency power supply is designed to operate only one elevator at a time, the energy absorption means may, if required, be located on the line side of the disconnect. Other building loads that may be supplied by the emergency power source may not be considered as absorbing regenerated energy unless they use the emergency power source as normal power. Refer to Article 620, Part X, of the NEC, Overspeed, for the installation requirements covering these requirements.

6.3.4 DESIGN

In addition to the NEC, elevator and escalator requirements, there are numerous electrical requirements for the facilities designer in ANSI/ASME A17.1 and A17.3. A17.1 is a required reference for new elevator and escalator installations and can be used by the designer in checking submittal drawings from the manufacturer. ANSI/ASME A17.3 provides the safety requirements for existing elevators and escalators and shall be referenced when existing installations are to be modified or to determine which modifications shall be made to existing installations and equipment to maintain optimum safety. The following lists typical key electrical requirements from ANSI/ASME A17.1 that the designer shall control over and above those from the NEC.

1. Access to elevator equipment is to be controlled and limited to authorized persons.

2. Elevator equipment cannot share space with other building equipment except when the elevator equipment is separated from other equipment, enclosed by a rigid wire fence, and provided with a lock that is strictly for that enclosure.

3. Only electrical wiring, including raceways and cables, used directly in connection with the elevator, including wiring for (a) signals, (b) communication with the car, (c) lighting, heating, air conditioning, and ventilating the car, (d) fire-detecting systems, (e) pit sump pumps, and (f) heating and lighting the hoist way may be installed in the hoist way.

4. A minimum lighting level of 108 lux for the equipment rooms and spaces and 541ux on the floor of the pit is required. The basis for the specified illumination level should be in accordance with the Illuminating Engineering Society (IES) lighting handbook.

5. A stop switch (emergency stop) is required in each elevator pit at the access door to the pit. If the pit exceeds 6 ft, 7 in., a second switch is required adjacent to the ladder. The two switches will be connected in series.

6. Car lighting shall consist of a minimum of two lamps to be supplied by a dedicated circuit with a lock-open disconnect in the equipment room.

7. A 115-V, 20-A receptacle shall be provided in all equipment spaces and in the pit.

8. A phase-reversal protection shall be provided to ensure that the elevator motor cannot start if the phase rotation is in the wrong direction or if there is a failure of any phase.

9. Capacitors and other devices whose failure could cause unsafe elevator operation are prohibited; only devices specified by the NEC or the manufacturer may be installed.

6.3.5 FIRE PROTECTION

The electrical designer shall coordinate with the manufacturer the design of the fire protection systems that connect to the elevator control panel. The system will be designed to return the car to a designated area (normally the first floor or lobby) in the event of smoke or fire in the equipment area or near the elevators. In that event, the car returns to a designated area where passengers can safely exit the facility. In addition to coordinating car control, the system provides for the shutdown of the electrical elevator equipment prior to operation of the sprinklers and the transmission of the alarm and provides a means for the firefighters to assume manual control of the elevator from the designated area. The requirements for these systems are detailed in ANSI/ASME A17.1.

6.3.6 INSPECTIONS AND RECORDS

Elevator inspections and recordkeeping are performed in accordance with the local authority having jurisdiction. The ANSI/ASME A17.2 series of inspectors manuals provide a guide for performing tests and inspections as well as recommended inspection checklists. In addition to acceptance inspections and tests, the code requires 1-and 5-year inspections for electric elevators and 1- and 3-year inspections for hydraulic elevators.

6.3.6.1 CODES

Elevators are required to be in compliance with the issue of ANSI/ASME A17.1 in force the date they were installed. If the local authority has adopted ANSI/ASME A17.3, the code for existing installations, they shall be in compliance with it, except they shall not be downgraded to it. When ANSI/ASME A17.3 is in force, it becomes the minimum standard to which installations shall adhere, and if existing installations are upgraded in accordance with ANSI/ASME A17.1, Part XII, they shall also be in compliance with the more stringent requirements of A17.3.

6.3.6.2 INSPECTOR QUALIFICATIONS

Inspectors should meet the requirements of ANSI/ASME QEI-1 and be recognized by the local enforcing authority. Repair and maintenance personnel should be qualified elevator mechanics.

6.4 PORTABLE AND VEHICLE-MOUNTED GENERATORS

Using portable and vehicle-mounted generators to operate electric tools on job sites is permitted under specific conditions.

However, OSHA inspections have disclosed a potentially serious hazard resulting from the use of portable generators. Both OSHA and the NEC permit the use of two-wire, single-phase generators of not more than 5,000 W "where the circuit conductors of the generator are insulated from the generator frame and all other grounded surfaces." Under these conditions, neither the receptacles, cord sets, nor tools need to be protected by GFCIs or an assured equipment grounding conductor program. This exception from using GFCIs is granted because with an insulated (isolated) circuit, there is no dangerous current flow from the generator-fed conductors to ground, structural steel, or any other grounded object. However, the use of GFCI devices is still recommended.

If the circuit conductors are not isolated, however, the shock hazard would be the same as with any other electrical source and the exemption does not apply. In wet or high humidity environments, circuit conductors may not be suitably isolated and the exception would not apply.

All portable electric generators that supply 15-or 20-A, 120-V receptacles and that are in use or are available for use on construction sites shall meet all the following conditions or be used only with either GFCIs or an assured equipment grounding conductor program.

1. They must be rated not more than 5 kW.

2. They shall have only a two-wire circuit (i.e., only 120-V output).

3. They shall have both circuit conductors insulated from the frame and all other grounded surfaces.

6.5 BATTERIES

Storage batteries are considered a live source and appropriate precautions should be taken when working around them. Information regarding batteries and battery rooms can be found in NFPA 70E, 240 and 320.

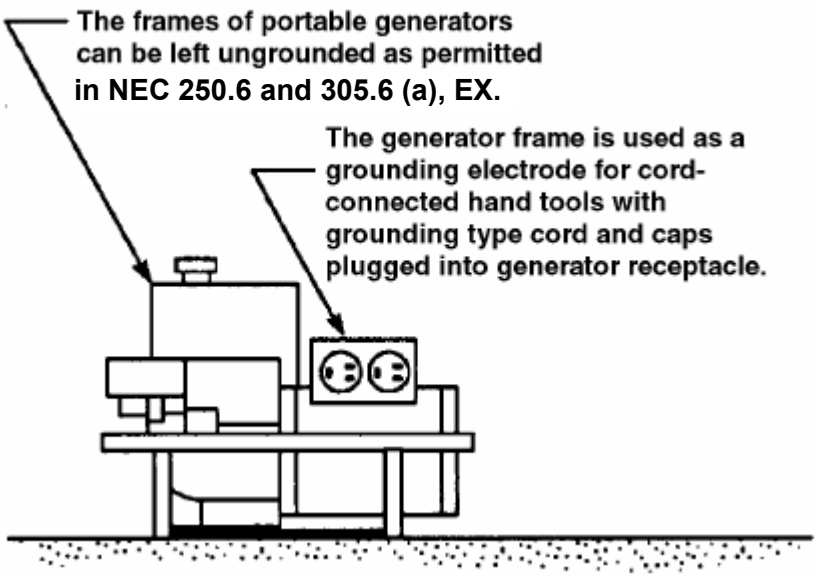

NEC Section 250-34

Figure 6-3. The ungrounded frame of a generator is acceptable as a grounding electrode if the circuit conductors are insulated from the frame and all other grounded surfaces.

6.5.1 SURROUNDING SPACE

Adequate space should be provided around storage batteries for safe inspection, maintenance, testing, and cell replacement. Space shall be left above cells to allow for operation of lifting equipment when required, for addition of water, and for taking measurements.

6.5.2 LOCATION

Storage batteries should be located in a protective enclosure or area accessible only to qualified persons. A protective enclosure can be a battery room; a control building; or a case, cage, or fence that shall protect the contained equipment and minimize the possibility of inadvertent contact with energized parts.

6.5.3 VENTILATION

The battery storage area shall be ventilated by either a natural or powered ventilation system to prevent accumulation of hydrogen. The ventilation system shall limit hydrogen accumulation to less than an explosive level.

6.5.4 CONDUIT

Because the vapors given off by a storage battery are very corrosive, the wiring shall withstand the corrosive action, and special precautions are necessary as to the type of insulation used and the protection of all metalwork. It is stated by their respective manufacturers that conduit made of aluminum or silicon-bronze is well suited to withstand the corrosive effects of the vapors in battery rooms. In contrast, if steel conduit is used, it is recommended that it be zinc-coated and kept well painted with asphaltum paint.

6.5.5 BATTERY ROOM

There are no special requirements for the type of fixtures or other electrical equipment used in the battery room, with proper ventilation. (See NEC 480 and Figure 6-4)

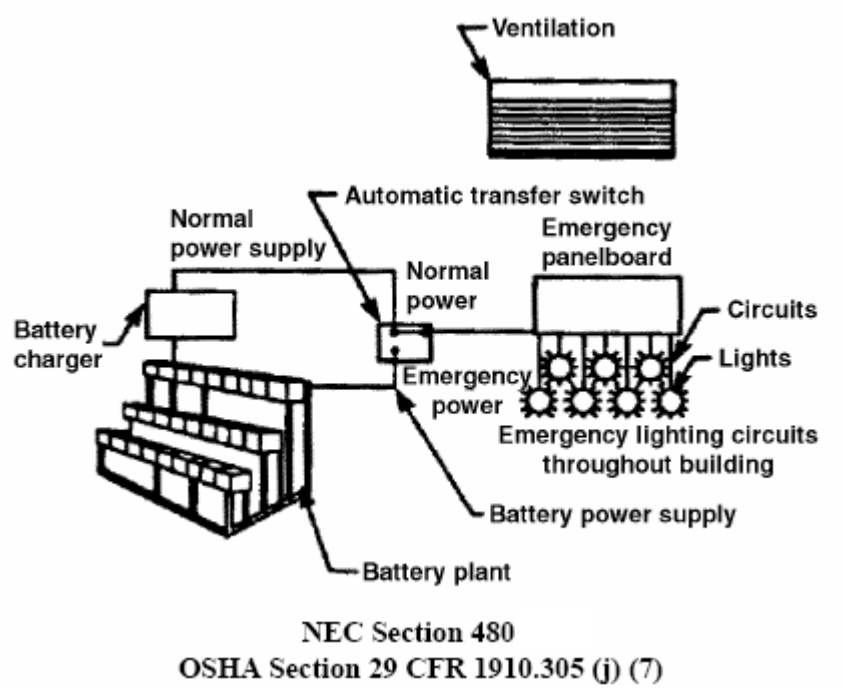

Figure 6-4. With proper ventilation there are no special requirements for wiring and equipment installed in battery rooms per NEC 480.

6.5.6 PERSONAL PROTECTIVE EQUIPMENT

Personal protective equipment (PPE) capable of protecting employees from acid splashes shall be used by those working on or servicing batteries. The minimum acceptable PPE shall include acid resistant gloves, aprons, and chemical-splash goggles. A full-face shield may also be used; it shall not, however, be worn in place of goggles.

The design and use of PPE for wear when servicing batteries shall comply with OSHA requirements. Safety showers and eyewash stations are also required.

6.5.7 TOOLS

Tools used for working on batteries shall be insulated or nonsparking.

Tools used for working on batteries shall be insulated or nonsparking.

6.5.8 STORAGE BATTERIES AND BATTERY BANKS

The following subsection covers rechargeable batteries used as a source of electrical energy. This category is not limited to batteries of a particular voltage and energy rating, since the

nature of the associated electrical hazards is similar without regard to battery size; the severity of the hazard increases as the battery ratings increase.

6.5.8.1 TYPES OF HAZARDS

Some of the types of hazards associated with storage batteries and battery banks are listed as follows:

1. Accidental grounding of one polarity of a battery bank can create a hazardous voltage between the ungrounded polarity and ground.

2. Accidental shorting of the exposed terminals or cables of a battery can result in severe electric arcing, causing burns and electric shock to nearby personnel.

3. Hydrogen gas generated during battery charging can create fire, explosion, and toxicity hazards.

4. Exposed terminals in a battery bank present electric shock hazards.

5. Batteries, particularly sealed-cell batteries, can explode if they are shorted or if they are charged at excessively high rates.

6. Electrolytes can be highly corrosive and can produce severe burns to personnel on contact.

6.5.8.2 DESIGN AND CONSTRUCTION CRITERIA

Reliable design and construction criteria for storage areas for batteries are as follows:

1. Battery installations shall conform to the requirements in the current edition of the NEC.

2. Battery banks should not be grounded except as required in NEC a ground detector should be used to indicate an accidental ground.

3. Batteries should be mounted to allow safe and convenient access for maintenance.

4. Lockable doors should be provided to control access to rooms or enclosures containing battery banks.

5. Approved safety showers and eyewash stations should be provided close to battery banks.

6. Appropriate ventilation for discharges of gas should be provided.

7. In areas where seismic activity is present, the installation should be designed according to local standards.

6.5.8.3 OPERATING CRITERIA

Operating criteria are as follows:

1. Maintain battery bank connections that are clean and tight to prevent excessive heating because of contact resistance.

2. Do not repair battery connections when current is flowing. An accidental opening of the circuit could result in a hazardous arcing condition.

3. Clearly post electrical and other hazards of battery banks and emergency first aid information near the equipment.

4. Arrange the battery banks so that temperature stratification will not result in over- or under-charging.

   Note: The optimum storage temperature for maximum battery life is 77°F ± 2° (25°C ± 1).

7.0 WORK IN EXCESS OF 600 VOLTS

Qualified and competent electrical workers are required to perform a variety of tasks with and around higher voltage electricity, electrical equipment, and apparatus. The nature of such work necessitates an understanding of applicable safety policies and rules.

Many electrical hazards and work practices are the same regardless of the voltage involved. However, due to the nature of high voltage work, there are many hazards and work practices that are specifically related to high voltage. Refer to chapter 2 of this document for more details.

7.1 RESPONSIBILITIES FOR SAFETY

This section provides safety guidelines and requirements for carrying out assigned job tasks. It is essential that each employee exercise sound judgment to perform assigned tasks safely. Safety is the responsibility of each employee.

7.1.1 WORKERS

The greatest responsibility for a worker's safety lies directly with the worker. This means that all workers are responsible for performing their work in a manner that does not endanger themselves, their co-workers, or others in the area and for complying with safety rules and requirements. Workers should not rely solely on the care exercised by another for their protection. Workers are encouraged to contribute to the safety program and bring to the attention of their supervisors or safety representative any condition they believe is unsafe.

Other safety responsibilities of workers include the following:

1. The worker should examine the work area for existing hazards and proceed in a safe manner.

2. When seen in a dangerous situation, fellow workers should be warned in such a manner as to avoid confusing, startling, or suddenly alarming them.

3. Before climbing poles, ladders, or other such structures or before working on scaffolds, workers shall make a careful inspection to determine whether the structures are safe and are properly supported. Workers should not carry anything in their hands while ascending or descending ladders. Small objects or tools may be carried in pockets or pouches. Larger objects, however, should be raised or lowered by use of hand lines or ropes and blocks. Others working nearby or below should remain out of line of the work area in case anything should accidentally be dropped.

4. It is the responsibility of each worker to attend safety meetings. Workers should also make a practice of learning safety information made available to them that will help them perform their work more safely.

5. The worker shall report to the supervisor any personal injury as defined by the facility as soon as possible.

6. The worker should exercise care and good judgment when lifting heavy material, obtaining help if the object is too heavy or awkward for one person to handle.

7.1.2 SUPERVISORS

Supervisors are responsible for knowing and implementing applicable safety policies and directives and taking action as required to provide for the safety of the personnel and operations they supervise. This includes; taking positive action to determine and reduce, as necessary, the hazards associated with their operations; instructing employees in safe work methods and associated safety requirements; allowing only those employees that are qualified for the work to perform the work; and ensuring that employees perform their work safely.

Supervisors shall be responsible for the safety of all employees under their supervision. They shall enforce the rules that apply to the hazards involved.

Supervisors shall make certain that each new or transferred employee is instructed in the safe practices pertaining to his or her work.

Supervisors shall ensure that the appropriate employees receive instruction in appropriate emergency techniques, such as CPR, first aid, pole top and confined space rescue, warranted by the employee's duties.

Other duties of supervisors include the following:

1. Provide instructions on safe practices for the crew and see that they are followed.

2. Periodically examine supervised employees on their knowledge of the safety rules and approved emergency techniques.

3. Not allow a worker to perform any task that cannot be performed safely or for which the worker is not qualified.

4. Report every injury in the established manner prescribed for the facility.

5. Be responsible for the care and proper use of all protective devices.

6. Be responsible for proper posting of hazardous work areas as a safeguard to those supervised. Under no circumstances shall the supervisor allow work to continue if safety precautions are ignored.

7. Designate a qualified worker to be in charge of work during the supervisor's absence. The supervisor should not leave the job while dangerous work is in progress.

8. Coach and direct employees who are working near exposed, energized wires, equipment, or apparatus.

9. Prescribe, along with employees, the appropriate PPE when establishing safety related work practices.

7.2 TRAINING

7.2.1 EMPLOYEE TRAINING

Employees shall be trained in and familiar with the safety-related work practices, safety procedures, and other safety requirements in this section that pertain to their respective job assignments.

Employees shall also be trained in and familiar with any other safety practices, including applicable emergency procedures that are not specifically addressed in this section but are related to their work and necessary for their safety.

7.2.2 QUALIFIED EMPLOYEE TRAINING

Qualified employees shall be trained and competent in:

1. The skills and techniques necessary to distinguish exposed live parts from other parts of electrical equipment.

2. The skills and techniques necessary to determine the nominal voltage of exposed live parts.

3. The skills and techniques necessary to determine the minimum approach distances corresponding to the voltages to which they are exposed.

4. The proper use of the special precautionary techniques, personal protective equipment, insulating and shielding materials, and insulated tools for working on or near exposed energized parts of electrical equipment.

Training may consist of a combination of classroom and on-the-job type.

7.3 JOB BRIEFINGS

The employee in charge shall conduct a job briefing with the employees involved before the start of each job. The job briefing will at least cover the following subjects: hazards associated with the job, work instructions involved, special precautions, energy source controls, and personal protective equipment requirements.

If the work or operations to be performed during the work day are repetitive and similar, at least one job briefing shall be conducted before the start of the first job of each day or shift. Additional job briefings shall be held if significant changes, which might affect the safety of the employees, occur during the course of the work.

A brief discussion is satisfactory if the work involved is routine and if the employee, by virtue of training and experience, can reasonably be expected to recognize and avoid the hazards involved in the job. A more extensive discussion shall be conducted if the work is complicated or extremely hazardous, or the employee cannot be expected to recognize and avoid the hazards involved in the job.

An employee working alone need not conduct a job briefing. However, the employee shall ensure that the tasks to be performed are planned as if a briefing were required.

7.4 PERSONAL PROTECTIVE EQUIPMENT AND PROTECTIVE CLOTHING

Employees shall wear appropriate personal protective equipment (PPE) and protective clothing (see Section 7.4.8) to protect them from hazards of high-voltage apparatus. Employees authorized or required to work on high-voltage systems shall be completely familiar with the PPE and protective clothing they need for adequate protection while working on such systems. (Refer to Appendix C for suggested types of PPE and protective clothing.) (See Figure 7-1)

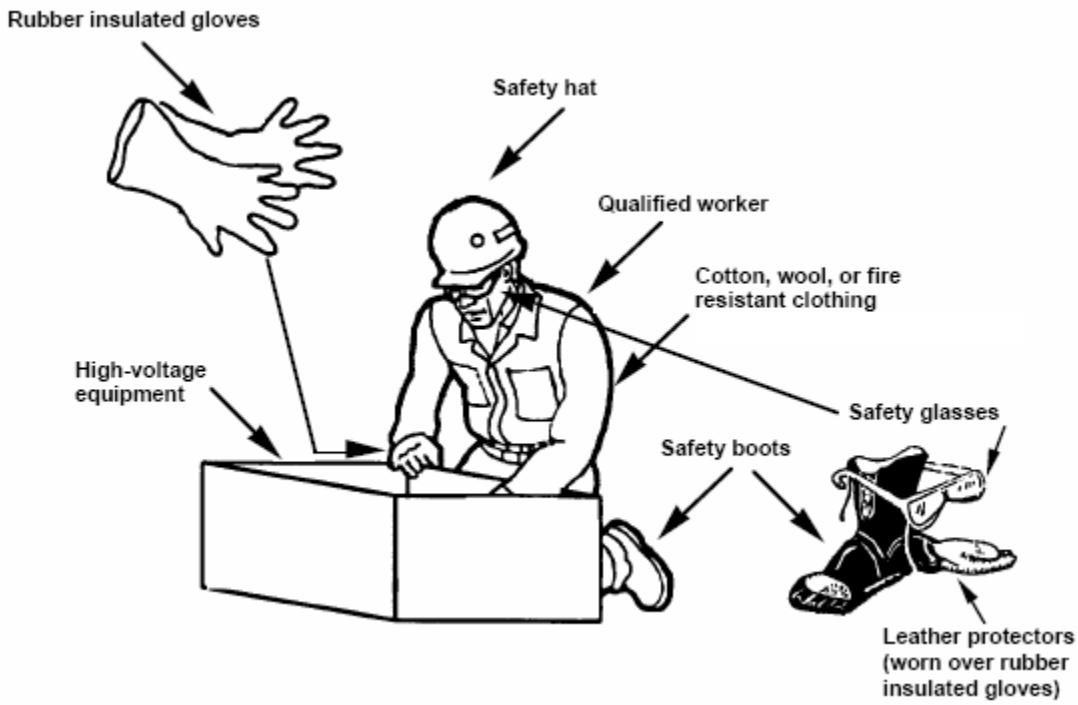

Figure 7-1. Appropriate personal protective equipment and protective clothing shall be worn by electrical workers to protect them from electrical hazards.

7.4.1 SHOES

Employees should wear shoes or boots that comply with the requirements of ANSI Z41. No metal parts shall be present in the sole or heel of the shoes where nonconductive shoes are required.

7.4.2 SAFETY HAT

Workers should wear approved hardhats when working aboveground on poles, structures, or buildings or in trees.

Workers shall wear hardhats when working on the ground near poles, structures, buildings, or trees in which work is being done. Workers shall wear hardhats when visiting or observing in areas where overhead work is being done.

7.4.3 EYE PROTECTORS

Whenever eyes are in danger of being injured, workers shall wear safety goggles or other eye protectors meeting ANSI standards. When the work being performed dictates, workers should wear nonmetallic and nonconductive eye protection.

7.4.5 METAL FASTENERS

Workers shall not wear articles such as loose chains, keys, watches, or rings if such articles increase the hazards associated with inadvertent contact with energized parts or can become caught under or snagged while climbing off or on structures, equipment or vehicles.

7.4.6 WORK GLOVES

When insulated gloves suitable for high-voltage are not required, otherwise suitable work gloves should be worn while handling materials and equipment to prevent the possibility of slivers, cuts, and skin irritation.

7.4.7 WORK CLOTHES

Work clothes should be made of natural materials, such as cotton or wool, or fire resistant materials and should have full length sleeves. Sleeves should be rolled down for greatest protection.

7.4.8 FIRE RESISTANT CLOTHING

FR materials, such as flame-retardant treated cotton, meta-aramid, para-aramid, and poly-benzimidazole (PBI) fibers provide thermal protection. These materials can ignite but will not continue to burn after the ignition source is removed. FR fabrics can reduce burn injuries during an arc flash blends, para-aramid adds strength to a fabric to prevent the fabric from breaking open due to the blast shock wave and high thermal energy of the arc

7.4.8.1 GENERAL

All fire resistant fabrics comply with 29 CFR 1910.269(1)(6)(iii). Untreated cotton and wool comply if the fabric will not ignite and continue to burn under the conditions to which the employee could be exposed. ASTM F1506-94 and 2 new ASTM provisional standards, outline the testing procedures to determine how various fabrics react in the presence of an electric arc on an instrumented manikin or panel. The new ASTM provisional standards provide testing procedures that expose untreated and fire resistant fabrics to electric arcs. F1506-94 provides testing procedures that expose these same fabrics to a vertical flame test. Also see NFPA 70E, 110.7(A) for details on flash hazard analysis.

7.4.8.2 ELECTRIC ARC HAZARDS

Electric shock is a widely recognized hazard and involves current flow through or on the body. Burns from electric arcs are not as well recognized. There is no contact required and the burns can be severe if the clothing ignites or melts. The hazards to which the employee is exposed also include the clothing breaking open due to the arc pressure blast, the heat from the electric arc and subsequent secondary fires or explosions.

The extent of the employees' injury is dependent on the length of the arc gap, available fault current, duration of the arc, the distance of the employee from the arc, percentage of the body burned, the employees age, medical condition, and number of layers of the clothing system. The proper clothing system will minimize or reduce the burn injury.

7.4.8.3 TYPES OF FIRE RESISTANT FABRICS

Chemically dependent fire resistant fabrics are treated with flame retardant chemicals added to the fiber or treatments applied to the fabric. These treatments are activated by heat and produce gases that smother the flame. Typically, these fabrics have a definite life as defined by the manufacturer. This is usually defined by the number of home or commercial washings the garment is exposed.

Inherently fire resistant fabrics, by their composition, do not burn in air. The fire resistance of this fabric is not affected by washing.

7.4.8.4 CLOTHING SYSTEMS

All clothing worn by affected workers should be considered part of the employees protective clothing system. This includes rainwear, cold weather wear and underclothing. Protective clothing should provide a good functional fit to increase the protection and comfort of the clothing. When required, protection can be increased by wearing single or multiple layers of flame resistant outer garments over nonmelting clothing. Sleeves and shirts should be fully buttoned and appropriate neck, head, and hand coverings provided.

7.4.9 RUBBER GLOVES

The following requirements apply:

1. Rubber gloves shall be of appropriate voltage rating for the work being performed. All rubber gloves shall meet the standards set forth by ANSI/ASTM.

2. Rubber gloves issued for service shall be tested at appropriate voltage levels at intervals not exceeding 6 months.

3. Leather glove protectors shall be worn over rubber gloves except where leather protectors are not required by 29 CFR 1910.137 or the appropriate ASTM standard.

4. Rubber gloves should be carried cuff down in a bag, box, or container that is designed for this purpose. Rubber gloves may be kept inside of leather protectors.

5. Rubber gloves shall be visually inspected and field air-tested before use each day and at other times if there is cause to suspect damage.

6. Rubber gloves should be uniquely identified (i.e., serial number or other marking). The results of dielectric tests should be documented.

7. Rubber gloves shall be wiped clean of any oil, grease, or other damaging substances as soon as possible.

7.4.10 RUBBER LINE HOSE, HOODS, COVERS, SLEEVES, AND BLANKETS

Linemen's rubber insulating sleeves are worn to provide protection from electric shock and burn to the arm and shoulder areas. They are available in several different thicknesses, lengths, and designs, depending on the maximum voltage they are designed to protect against.

Insulating line hose (flexible hose) is used as an insulating cover for electric conductors to protect against accidental contacts. A lengthwise slit with overlapping sides permits the hose to be placed on conductors easily. It is available in various diameters, lengths, and compositions.

Insulating covers are used in conjunction with line hose to cover an insulator and the conductor attached to it for protection against accidental contact.

Rubber insulating blankets are molded sheets of insulating rubber or synthetic elastomer, usually square or rectangular in shape, designed to cover energized electrical equipment to prevent direct accidental contact by electrical workers.

7.4.11 LIVE LINE TOOLS

A careful periodic inspection shall be made of equipment used for handling or testing energized lines or equipment. Such tools shall be examined before each use to make certain they are in good condition.

Particular attention shall be given to preserving the surfaces of wooden and fiberglass tools used around electrical equipment, including ladders, pike poles, switch sticks, live-line tools, and insulating platforms. Only colorless varnish or other appropriate transparent insulating preservative shall be used.

Insulated tools shall be stored in a dry location. Suitable containers or racks shall be provided to protect the tools from mechanical damage and warping.

7.4.12 STOREROOM STORAGE

Since heat, light, oil, and distortion are natural enemies of rubber, rubber protective equipment should be guarded from these as much as possible. Rubber equipment shall not be stored near boiler rooms, steam pipes, or radiators and should be protected from exposure to direct sunlight.

Gloves should be stored in their natural shape in the leather protector. Keep sleeves flat with the inserts left in. Blankets should be stored flat, hung on pegs by the eyelet or rolled up. Line hose should be stored in its natural shape.

7.4.13 TRUCK STORAGE

The storing of rubber protective equipment on the truck should be planned. If possible, separate compartments should be provided for each class of equipment, and each compartment should be of sufficient size to allow the articles to lie in a natural position. Rubber gloves should be stored in glovebags and hung up. If stored in tool bags or inside boxes, nothing should be piled on top to cause distortion. Gloves should not be stored near vehicle heaters.

Sleeves should be stored flat with inserts rolled up lengthwise, or placed in a tube shaped bag. Nothing should be placed on top of sleeves or stored near vehicle heaters.

7.4.14 PLACING OF INSULATING GOODS ON CONDUCTORS

When workers are about to begin work that requires the use of rubber goods, they should climb or raise the bucket to a position just below the first line of conductors. When climbing they should then determine their working position and what lines and other conductors should be covered. They should then request the required rubber goods. Before proceeding further, the workers shall put on the rubber gloves and leather protectors and make certain that they are in good order. Rubber goods shall be raised in a secure manner.

As the workers ascend to their working position, they shall cover all conductors which provide a hazard. This should be done from below whenever possible. At no time shall workers pass through energized equipment before it is covered with rubber goods (line guards). All conductors and grounds adjacent to working space shall be considered, including those near any possible change of position that may be necessary. When line hose is applied to vertical or sagging wires, it should be fastened to the line to prevent its slipping from position. When blankets are used for covering items such as dead ends, potheads, secondary racks, and transformers, they should be secured by wooden or plastic clamp pins or tie thongs. After the protective equipment has been placed, care should be taken to prevent damage to the rubber from tie wires, spurs, or other objects.

7.4.15 REMOVING INSULATING GOODS FROM CONDUCTORS

When the job is completed, the protectors should be removed in the reverse order of installation. Remote conductors are removed first and the wires nearest the workers last. After being detached, the equipment should immediately be lowered to the ground.

7.4.16 CLEANING AND INSPECTING

After the rubber goods have been lowered to the ground, they should be cleaned and visually inspected before being placed in the carrier compartments of the truck.

7.5 PROTECTIVE GROUNDING OF LINES AND EQUIPMENT

Grounding is the most effective way of protecting electrical workers from electric shock. That is why it is important to ensure that all deenergized lines and equipment are grounded.

7.5.1 PURPOSE

Blankets should be rolled up and placed in canisters or protective canvas holders. Do not fold, hold together with tape, pile materials on top of, or store blankets near vehicle heaters.

This section provides information concerning protection for workers repairing, servicing, or working on high-voltage power lines.

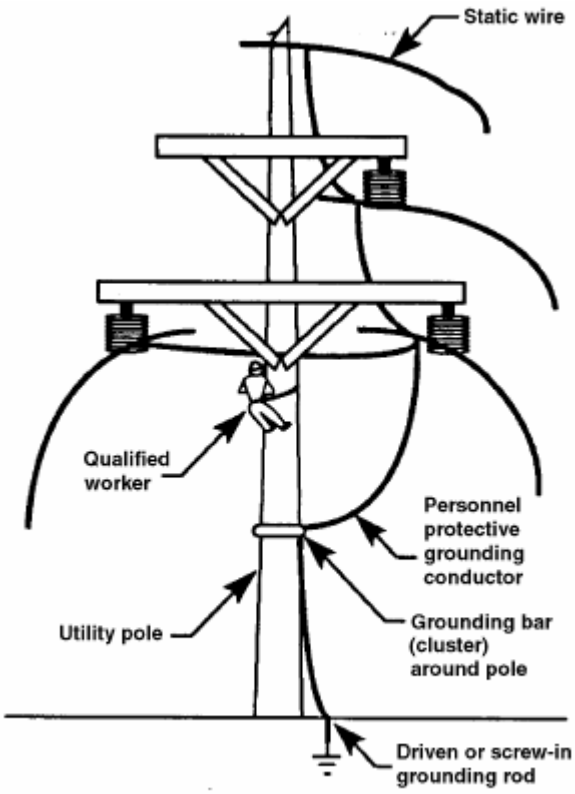

OSHA Section 29 CFR 1910.269(n), 1926.954

Figure 7-2. Equipotential grounding is the most effective way of protecting employees who are working on high-voltage systems and equipment.

7.5.1.1 REDUCE THE POTENTIAL VOLTAGE DIFFERENCES ACROSS THE WORKER

The primary function of personal protective grounds is to provide maximum safety for personnel while they are working on deenergized lines or equipment. This will be accomplished by making provisions that will reduce the potential voltage differences at the work site (voltage differences across the worker) to a safe value in the event that line or equipment being worked on is accidentally reenergized, voltages induced from other energized lines, an energized line falls on the line being worked, or there is a lightning strike near the line being worked.

The personal protective grounds should provide a low-impedance path to ground to ensure prompt operation of the circuit protective devices.

7.5.2 APPLICATION

Certain methods and steps should be exercised when placing grounds and loads to protect workers from high-voltage hazards.

7.5.2.1 DEENERGIZED LINES

When an energized line or equipment in excess of 600 V is removed from service to be worked on, it shall be treated as energized until it is deenergized, tagged, locked if necessary, tested, and grounded.

7.5.2.2 NEW CONSTRUCTION OR DISMANTLING OF FACILITIES

If isolating devices are not in place and energization is impossible from any source, single-phase grounding is appropriate, acceptable, and safe. If energization is possible by the closure of a jumper or isolating device, shorts and grounds shall be used unless conductor handling activity makes this impractical or impossible because of line design or construction process.

7.5.2.3 MINIMUM APPROACH DISTANCE FROM UNGROUNDED CONDUCTORS

The minimum approach distances in Section 2.13.4.1 shall be maintained from ungrounded conductors at the work location. The ground may be omitted if the making of the ground is impractical or the resulting conditions are more hazardous than working on the lines or equipment without grounding. However, all work shall be done as if the line or equipment were energized.

7.5.2.4 VISIBLE THREE-PHASE SHORT AND GROUND REQUIRED

Visible three-phase short circuiting may be accomplished through conductive parts such as guy wires and unpainted metal tower members, but shall not be effected through a grounding mat or other concealed conductors.

7.5.2.5 GROUND CIRCUIT

No power disconnect switch, power circuit breaker, transformer, wave trap, or fuse shall be part of the protective grounding circuit.

Table 7-2. AC live-line work minimum approach distance.

Phase to Phase Nominal Voltage (kV)	Distance, Phase to Employee	
	Phase to Ground Exposure (ft - in)	Phase to Phase Exposure (ft - in)
1 or less	Avoid contact	Avoid contact
1.1 to 15	2-1	2-2
15.1 to 36	2-4	2-7
36.1 to 46	2-7	2-10
46.1 to 72.5	3-0	3-6
72.6 to 121	3-2	4-3
138 to 145	3-7	4-11
161 to 169	4-0	5-8
230 to 242	5-3	7-6
345 to 362	8-6	12-6
500 to 550	11-3	18-1
765 to 800	14-11	26-0

Note 1: These distances take into consideration the highest switching surge an employee will be exposed to on any system with air as the insulating medium and the maximum voltage shown.

Note 2: The clear live line tool distances shall equal or exceed the values for the indicated voltage ranges.

Note 3: See 29 CFR 1910.269, Appendix B for information on how the minimum approach distances were derived.

7.5.3 GROUNDING EQUIPMENT

The American Society for Testing and Materials (ASTM) Committee F-18, "Electrical Protective Equipment for Workers," has developed and published a consensus standard for protective grounds, ASTM Designation: F-855. This voluntary consensus standard may be used by all Federal agencies for procurement purposes. Therefore, grounding cables, clamps, and ferrules purchased should meet all the requirements of ASTM Designation: F-855. Aluminum cables shall not be used for personal grounds.

The grounding of high-voltage lines and equipment will provide workers with additional protection from electric shock if grounds are sized, selected, and installed properly.

7.5.3.1 AVAILABILITY

Grounding cables shall be available for use when work is being done on deenergized lines or equipment.

7.5.3.2 APPROVED CAPACITY

Grounding cables shall accommodate the maximum fault current to which the cable or equipment might be subjected.

7.5.3.3 GROUNDING CABLES AND HARDWARE

Personal protective grounding cables consist of appropriate lengths of suitable copper grounding cable, with electrically and mechanically compatible ferrules and clamps at each end. In addition, appropriate hotsticks are required for installing and removing the conductor-end clamps to the conductors. Hotsticks are required for attaching ground-end clamps if the grounded system and the worker are at different potentials. Cluster bars provide a low-resistance means of connecting the ground-end clamps. Each of these components will be discussed in the following subsections.

7.5.3.4 GROUNDING CABLES

Most of the grounding cables in use today (and available for purchase) are actually manufactured for another purpose-principally as welding cable. These extra-flexible copper cables with jackets are manufactured according to appropriate ASTM standards for both cables and jackets, and can be expected to perform satisfactorily as grounding cables.

7.5.3.4.1 STRANDING

There are several classes of flexible cable with various stranding in the sizes normally used for grounding cables.

7.5.3.4.2 JACKETS

Welding cables are nominally insulated at 600 volts. When used as grounding cable, the insulation or jacket serves primarily for mechanical protection of the conductor. The flexible elastomer or thermoplastic jackets are manufactured, applied, and tested according to ASTM standards. Black, red, and yellow jackets are usually neoprene rubber compounds, while clear jackets are ultraviolet-inhibited polyvinyl chloride (PVC). All jackets should have the American

Wire Gage (AWG) size stamped or printed repeatedly along the length of the cable. The clear jacket allows easy visual inspection of the conductor for strand breakage, but becomes stiff and hard to handle at low temperatures. The clear jacket will split or shatter at very low temperatures.

7.5.3.4.3 FERRULES

Ferrules should be threaded-stud copper base compression type. Ferrules should have the filler compound vent hole at the bottom of the cable so that employees can visually check that the cable is fully inserted into the ferrule. Compound should be used with crimped ferrules. The ferrules should be crimped with the ferrule manufacturer's recommended die. The press shall have enough pressure to completely close the die. The area covering the inserted cable jacket should not be compressed. Heat shrink or springs should be installed over a portion of the ferrule to minimize strand breakage caused by bending. In all cases, the manufacturer's recommendations should be followed.

7.5.3.4.4 HANDLING OF GROUNDING CABLE

Personal protective grounds are usually handled and lifted by the cable. However, continuous flexing eventually breaks the conductor strands beneath the jacket. Therefore, employees should minimize the use of sharp bends in the cable.

7.5.3.4.5 SIZE OF GROUNDING CABLE

The size of the grounding cable must be selected to handle the maximum calculated fault current of the power system or specific portion thereof. The minimum size that shall be used for grounding cables is #2 (AWG) flexible copper. In larger substations, the maximum available fault current may require larger cables. If larger cables are not available, parallel cables (with the appropriate derating factor) may be used.

Most manufacturers and suppliers of grounding cables publish tables to assist the user in selecting the proper cable size for a given fault current. These tables show the maximum fault current capability for several sizes of copper grounding cables.

7.5.3.4.6 GROUNDING CABLE LENGTH

Excessive cable lengths should be avoided. Therefore, slack in the installed cables should be minimal to reduce possible injury to workers. Resistance in the cable increases with cable length, and excessive length could exceed the tolerable voltage drop across the body. Longer than necessary cables also tend to twist or coil, which reduces the effectiveness of the cable.

7.5.3.4.7 GROUNDING CLAMPS

Grounding clamps are normally made of copper or aluminum alloys; sized to meet or exceed the current-carrying capacity of the cable; and designed to provide a strong mechanical connection to the conductor, metal structure, or ground wire/rod.

7.5.3.4.7.1 CLAMP TYPES

Clamps are furnished in, but not limited to, three types according to their function and methods of installation:

1. Type I clamps, for installation on deenergized conductors, are equipped with eyes for installation with removable hotsticks.

2. Type III clamps, for installation on permanently grounded conductor or metal structures, have T-handles, eyes, and/or square-or hexagon-head screws.

3. Other types of special clamps are designed for specific applications, such as cluster grounds, underground equipment grounding, and so on.

7.5.3.4.7.2 CLAMP JAWS

Bus clamps should be furnished with smooth jaws for installation on copper, aluminum, or silver-plated bus work without marring the surface. Conductor or metal structure clamps should be furnished with serrations or cross-hatching designed to abrade or bite through corrosion products on surfaces of the conductor or the metal structure being clamped. Several styles of conductor and ground-end clamps have jaws that can be replaced when the serrations have worn. Self-cleaning jaws are recommended for conductor-end clamps used on aluminum or aluminum conductor steel reinforced (ACSR) conductors. Several styles of ground-end clamps are designed with a cup-point set screw which should be tightened with a wrench (after the serrated jaws have been securely tightened) to break through paint, rust, galvanized coating, or corrosion on the surface that is to be clamped.

A typical grounding cable for transmission line work used by line crews consists of a 2/0 (AWG) copper cable with an insulating jacket, terminated with an all-angle, self-cleaning aluminum conductor clamp at one end, and a flat-faced clamp with a set screw at the other end for connecting to a tower leg or ground wire/rod.

7.5.3.4.8 GROUNDING CLUSTER BARS

When climbing wood-pole structures, workers may use a grounding cluster bar to connect the phase cables to the pole ground wire, if the ground wire has sufficient capacity to carry the fault current. Cluster bars must have an attached bonding lead. If there is no pole ground wire, the cluster bar for each pole is connected to a common driven or screw-in ground rod with a grounding cable (or cables). In substation grounding, a copper bar is sometimes used to connect the three-phase cables and a fourth cable to a riser from the station ground mat. When installing personal grounds on wood structures from a bucket, the ground cables may be connected between the overhead ground wire (OGW), and the phases without the use of cluster bars provided that an electrical bond of sufficient current carrying capacity exists between the OGW and the structure ground.

7.5.3.4.9 TEMPORARY GROUND RODS

Some typical examples of temporary ground rods used for grounding ungrounded structures or mobile equipment, or during conductor splicing operations, are either:

1. A minimum 5/8-inch diameter bronze, copper, or copper-weld rod at least 6 feet long, driven to a depth of at least 5 feet; or

2. A 6-foot, screw-type ground rod, consisting of a minimum 5/8-inch diameter copper-weld shaft with a bronze auger bit and bronze T-handle, screwed to a depth of at least 5 feet (preferred). The T-handle must be tightly connected to the rod.

If a temporary rod cannot be driven or screwed to a depth of 5 feet, additional rod(s) should be driven or screwed so that a total of at least 5 feet of rod is buried. These rods shall be bonded together with grounding cables prior to installing phase grounds. The rods should be placed 6 to 8 feet apart; however, the 10-foot clearance from the rods should be maintained. OGWs may be used at any time to bond the conductors provided that these wires are electrically bonded to the structure ground, either permanently or by personal grounds.

Groundsmen should stay clear (at least 10 feet where feasible) of items such as down guys, ground rods, maintenance vehicles, and structure legs or ground wires while they are bonded to protective grounds which are in place. When it is absolutely necessary to work on or near these features, employees should use bonded conductive or insulated platforms, or approved insulated shoes to minimize the hazard from step and touch potentials.

7.5.4 TESTING BEFORE INSTALLING GROUNDS

Before grounds are installed, the deenergized line or equipment shall be tested for voltage. Appropriate testers for the nominal voltage involved (audio or visual) should be used. They shall be tested immediately before and after use to verify that they are in good working condition.

7.5.5 ATTACHING AND REMOVING GROUNDS

Employees attaching and removing grounds shall comply with the following:

1. Grounding equipment should be visually inspected and all mechanical connections checked for tightness before each use.

2. The surface to which the ground is to be attached should be clean before the grounding clamp is installed or a self-cleaning clamp shall be used.

3. No ground shall be removed until all personnel are clear of the temporary grounded lines or equipment. When the grounding set is removed, it shall be disconnected from the line or equipment end first with an approved hot-line tool and moved to a point clear of energized conductors before the ground end is disconnected.

7.5.6 GROUNDING METHODS AND LOCATION OF GROUNDS IN ORDER OF PREFERENCE

Employees installing grounds shall install them using the information given in the following sections.

7.5.6.1 WORK LOCATION

Grounds should be installed at the work location with all grounded parts of different potential bonded together (on wood poles, all down guys, overhead ground wire, neutral conductor, and pole ground). The cluster bar assembly should be installed below the working area and jumper to the ground point or the neutral conductor and the phase conductor, a method of grounding termed "equipotential" grounding. It provides the greatest margin of safety for the lineworker by placing everything at equal potential, eliminating the possibility of the lineworker getting in series to ground.

7.5.6.2 MULTIPLE WORK LOCATIONS AND SINGLE-PHASE GROUNDING AT WORK LOCATION

If work is to be performed at more than one place in a line section, the line section shall be grounded at one location and the conductor be grounded at each work location to reduce the potential voltage difference across the work site.

7.5.6.3 OTHER LOCATIONS

Grounds shall be placed at the work location or at each side of the work location and as close as practical to it.

7.5.7 TESTING WITHOUT GROUNDS

Grounds may be temporarily removed when necessary for testing. Each employee shall use insulating equipment and be isolated from any hazard involved. Additional measures may be necessary to protect each exposed employee in case previously grounded lines or equipment become energized.

7.5.8 GROUND PERSONNEL

In cases where ground rods or pole grounds are used for personal protective grounding, personnel working on the ground shall either maintain a safe distance from such equipment or use the appropriate equipment designed to prevent touch-and-step potential hazards. The term "touch potential hazard" refers to the difference in voltage measured between the grounding equipment and a worker in contact with the grounding equipment at the time it is accidentally energized. The term "step potential hazard" refers to the difference in voltage measured between each foot of the worker standing or walking in an electrical field created by high voltage brought to earth.

7.6 INSTALLING OR REMOVING CONDUCTORS

Employees installing or removing conductors should follow certain guidelines to ensure safety.

7.6.1 WORKING ON ENERGIZED LINE OR EQUIPMENT

Employees working on energized lines or equipment should comply with the following:

1. Work on electrical equipment and circuits other than electrical utility lines and equipment, operating a 50 V or more ground, should be worked on following the guidelines of Section 2 of the handbook.

2. Line or equipment carrying an ac voltage in excess of 600 V phase-to-phase should be worked on with rubber gloves or live line tools. All other necessary protective devices such as line hose, hoods, covers, sleeves, and rubber blankets should be used. (See Section 2.1.2).

3. Energized line should be worked on from below whenever possible. When working energized line or equipment carrying 600 V or more to ground, there shall be two qualified workers performing the work (see Section 2.1.2). Work shall not be performed on energized

lines or equipment during rain, snow, sleet, fog, and other damp conditions, except in extreme emergencies if in the opinion of supervision and line crew it can be done safely.

4. While working on the same pole, workers shall not work simultaneously on wires that have a difference of potential.

5. Rubber gloves of appropriate voltage rating shall be worn when working within reach of a fellow employee who is working on or within reach of wires or equipment carrying voltage in excess of 600 V.

6. Insulated tongs or disconnect sticks shall be used to open or close plugs or fuses or to disconnect blades.

7.6.2 STRINGING OR REMOVING DEENERGIZED CONDUCTORS

Employees stringing or removing deenergized conductors should follow certain safe work practices. Consideration should be given to the following:

1. When it is necessary to conduct any work on poles or structures carrying more than one circuit and where there is not safe working clearance between circuits, the conductors not being worked on shall be either:

   a. Untied and separated with proper clearance from the pole or structure,

   b. Deenergized and grounded, or

   c. Covered with the necessary protective devices.

2. Prior to stringing operations, a job briefing shall be held setting forth the plan of operation and specifying the type of equipment to be used, grounding devices to be used and instructions to be followed, crossover methods to be employed, and clearance authorization required.

3. Where there is a possibility that the conductor will accidentally contact an energized circuit or receive a dangerous induced voltage buildup, to protect the employee from the hazards of the conductor, the conductor being installed or removed shall be grounded or provisions made to insulate or isolate the employee.

4. If the existing line is deenergized, proper clearance authorization should be secured and the line grounded on both sides of the crossover, or the line being strung or removed should be considered and worked on as energized.

5. When workers cross over energized conductors, rope nets or guard structures shall be installed unless provisions are made to isolate or insulate the workers or the energized conductor. Where practical, the automatic reclosing feature of the circuit-interrupting device should be made inoperative. In addition, the line being strung should be grounded on either side of the crossover or considered and worked on as energized.

6. Conductors being strung or removed should be kept under positive control by the use of adequate tension reels, guard structures, tielines, or other means to prevent accidental contact with energized circuits.

7. Guard structure members should be sound, of adequate dimension and strength, and adequately supported.

8. Catch-off anchors, rigging, and hoists should be of ample capacity to prevent loss of lines.

9. The manufacturer's load rating should not be exceeded for stringing lines, pulling lines, sock connections, and all load-bearing hardware and accessories.

10. Pulling lines and accessories should be inspected regularly and replaced or repaired when damaged or when their dependability is doubtful.

11. Conductor grips should not be used on wire rope unless designed for this application.

12. While the conductor or pulling line is being pulled (in motion), workers should not be permitted directly under overhead operations, nor should any employee be permitted on the cross arm.

13. A transmission clipping crew should have a minimum of two structures clipped between the crew and the conductor being sagged. When working on conductors, clipping crews should install grounds at the work location. The grounds should remain intact until the conductors are clipped in, except on dead-end structures.

14. Except during emergency restoration activities, work from structures should be discontinued when adverse weather (such as high wind or ice on structures) makes the work hazardous.

15. Stringing and clipping operations should be discontinued during an electrical storm in the immediate vicinity.

16. Reel-handling equipment, including pulling and braking machines, should have ample capacity, operate smoothly, and be leveled and aligned in accordance with the manufacturer's operating instructions.

17. Reliable means of communication between the reel tender and pulling rig operator should be provided.

18. Each pull should be snubbed or dead-ended at both ends before subsequent pulls.

7.6.3 STRINGING ADJACENT TO ENERGIZED LINES

Employees stringing adjacent to energized lines should follow certain safe work practices. Consideration should be given to the following:

1. When performing work from structures, clipping crews and all others working on conductors, subconductors, or overhead grounding conductors should be protected by individual grounds installed at every work location.

2. When workers are stringing adjacent to energized lines, the tension-stringing method or other methods that prevent unintentional contact between the lines being pulled and any worker should be used.

3. All pulling and tensioning equipment should be effectively grounded.

4. Aground should be installed between the tensioning reel setup and the first structure to ground each bare conductor, subconductor, and overhead grounding conductor during stringing across or adjacent to energized lines.

5. During stringing operations, each bare conductor, subconductor, and overhead grounding conductor should be grounded at the first tower adjacent to both the tensioning and pulling setup and at appropriate intervals. The grounds should be left in place until conductor installation is completed. Except for moving-type grounds, the grounds should be placed and removed with a hot stick.

6. Conductors, subconductors, and overhead grounding conductors should be grounded at all dead-end or catch-off points.

7. A ground should be located at each side and within 10 ft. of working areas where conductors, subconductors, or overhead grounding conductors are being spliced at ground level. The two ends to be spliced should be bonded to each other. It is recommended that splicing be carried out on either an insulated platform or on a conductive metallic grounding mat bonded to both grounds. When a grounding mat is used, it should be roped off and an insulated walkway provided for access to the mat.

7.7 SPECIAL TOOLS

Lineworkers shall be familiar with special tools that are used for climbing, such as climber gaffs, climber straps, and body belts shall properly store and maintain such equipment.

7.7.1 LINEWORKER'S CLIMBING TOOLS

Employees should apply the following:

1. All climbers should be inspected frequently by the worker using them.

2. Climber gaffs should be kept sharp.

3. A climber shall not be used when its gaff becomes shorter than 1-1/4 in. inside measurement.

4. Climber straps that are worn or otherwise defective shall be replaced.

7.7.2 BODY BELTS AND SAFETY STRAPS

Employees using body belts and safety straps (work positioning equipment) should apply the following:

1. All body belts and safety straps shall be inspected before each use by the employee who uses them.

2. Workers shall use their body belts and safety straps when doing any work involving danger of falling.

3. Body belts and safety straps should not be stored with unguarded sharp tools or devices.

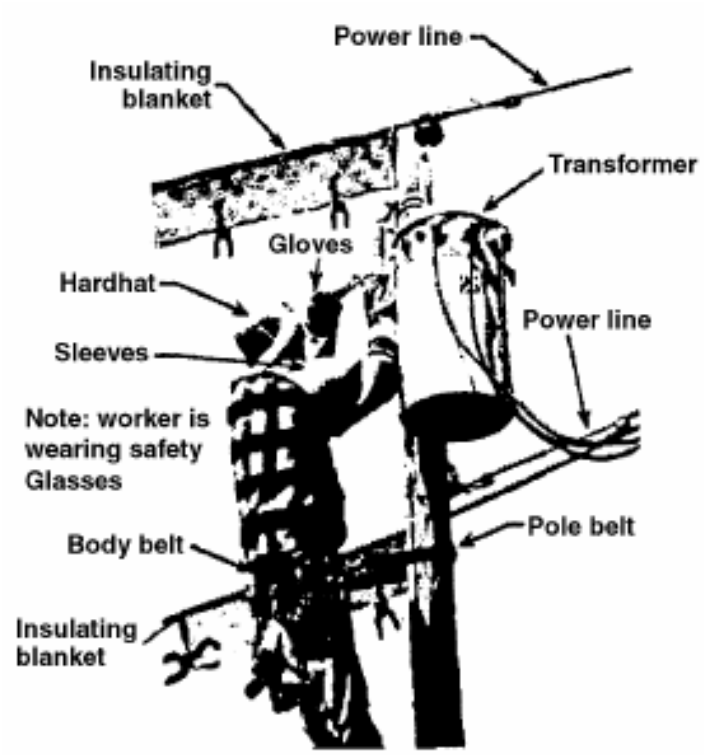

OSHA Section 29 CFR 1910.132, 133, 135, 136, 137
OSHA Section 29 CFR 1926.951

Figure 7-3. Employees using special tools for climbing and for servicing high-voltage systems shall be trained on how to use such tools and equipment.

4. Heat, sharp bends, and overstressing of body belts and safety straps should be avoided as they are injurious to leather. Wet leather should be dried slowly at moderate temperatures.

7.7.3 TOOL BAG AND EQUIPMENT

Tools, small equipment, and materials should be raised and lowered in a tool bag. The tool bag should be inspected before use to see that it contains no broken glass or other material on which the employee could cut his or her hand or rubber gloves. Tool bags should not have any metal in their construction.

7.7.4 TAPES AND RULERS

Workers should not use metal measuring tapes or tapes having metal strands woven into the fabric, brass bound rules, or metal scales when working near electrical equipment or conductors

7.7.5 SPOON AND SHOVELS

Tools of this type, especially those having long wooden handles, shall not be used when the handles are cracked, split, or broken.

7.7.6 PIKE POLES

Pike poles shall comply with the following:

1. Cracked, broken, or slivered pike poles should not be used;

2. Pike poles should not be thrown; and

3. When not in use and loaded on the truck, the points should be protected so that they will not injure anyone.

7.7.7 HAND AXES AND SHARP TOOLS

Hand axes and sharp tools shall comply with the following:

1. Hand axes should not be used on overhead work; and

2. When not in use, sharp tools should be protected by the suitable guards or containers.

7.7.8 HANDLINES AND TAGLINES

Use high quality, nonconductive handlines and taglines. Keep them stored in a clean, dry location and protected from damage and contamination. Wear clean gloves when handling handlines and taglines to avoid contaminating the rope. Remove wet, dirty, or damaged ropes from service.

7.8 TREE TRIMMING

Equipment used to trim trees shall be maintained in approved and proper working condition to aid tree trimmers and protect them from hazards.

7.8.1 CARE AND USE OF TOOLS

Tools shall be cared for using the following methods:

1. The handles of all tree-trimming tools shall be kept well dressed and varnished.

2. When trimming trees near live conductors, the employee shall not work with wet tools or ropes. Such equipment should be protected during rain showers.

3. A tree-trimming saw shall be protected by being put into its scabbard when it is not in use.

4. All ropes shall be inspected frequently for cuts and wear.

7.8.2 CLIMBING

The following shall be applied for climbing:

1. An employee should use a ladder to climb a tree, unless the employee is properly equipped and trained for tree climbing.

2. Climber gaffs and straps shall be designed for tree climbing. The safety strap shall be constructed to withstand contact with saws and other sharp objects. Workers in trees shall be tied off.

7.9 SERIES STREET-LIGHTING CIRCUITS AND APPARATUS

Lighting circuits and apparatus used for series street-lighting should comply with the following:

1. Rubber gloves or any other necessary protective equipment should be used when working on a series street-lighting circuit, unless the circuit is electrically isolated and grounded at the work location. Unless properly tagged and isolated, series street lighting circuits should be considered as being energized.

2. The opening of a time clock, a photoelectric relay, or remote control overcurrent control equipment shall not be considered as isolation points that provide a safe work condition while employees work on series lighting circuits.

3. The use of series lighting circuits is discouraged.

7.10 UNDERGROUND

Underground work requires a means of safe entrance and exit from the workspace. Employees should follow the guidance given in the following subsections to ensure safety in entering and leaving such work spaces.

7.10.1 WORKING IN MANHOLES, UTILITY TUNNELS, AND VAULTS

Manholes, utility tunnels, and vaults may be considered confined spaces and shall comply with 29 CFR 1910.146,1910.269(e) and (t), and 1926.956. The following may apply to employees working in manholes, utility tunnels, and vaults:

1. Employees who enter manholes shall be trained in the hazards of the confined spaces, confined space entry procedures, and confined space emergency and rescue procedures.

2. When opening a manhole, employees shall completely remove the manhole cover from the opening. Manhole covers should be removed before the cable is rodded or installed and removed.

3. Open manholes shall be barricaded and protected by flags or guards as required. All open manholes shall be protected as required by 29 CFR 1910.269(e).

4. Before the pit is entered, it shall be tested for oxygen content and the flammable-gas explosive limit. Workers shall not smoke or use an open flame while tests for an explosive mixture of gas are being made.

5. If the oxygen level is less than 19.5°10 or greater than 21°10, the pit shall be ventilated and retested before any work begins.

6. If the flammable-gas content is more than 10°10 of the lower explosive limit, the pit shall be ventilated and retested before any work begins. When testing indicates that a manhole contains either a mixture of explosive gas and air richer than safe working limits or

flammable liquids, corrective measures shall be taken before work in the manhole is allowed to proceed.

7. When nitrogen is used in manholes or confined areas, approved atmosphere testing devices shall be placed in operation where they can be observed by people in the manhole. When the testing devices show a deficiency of oxygen, all personnel shall leave the manhole until the proper atmosphere is restored.

8. The manhole shall be ventilated continuously when occupied.

9. An attendant is required topside with the means to summon help without leaving his or her station. The attendant shall be capable of instituting a rescue without entering the manhole. The attendant on the surface is responsible for the safety of the persons in the manhole.

10. The topside attendant can perform other duties outside of the enclosed space if these duties do not distract the attendant from monitoring employees within the space. All manholes over 4 ft. deep should be entered with the use of a ladder as required by 29 CFR 1910.269 (t)(1).

11. Workers should open all entrance bars or chains on the topside of manhole guards before entering or leaving a manhole. All chains or bars should be closed at all other times, except when raising or lowering tools or materials.

12. Operations involving chemical cleaning agents, solvents, volatile chemicals, cutting and welding equipment, and other hazardous agents or tools require additional consideration. Consultation with and concurrence of appropriate industrial safety and industrial hygiene personnel are required.

13. The employee shall enter or leave a manhole by means of a ladder. The employer shall not use a cable, cable hanger, or manhole rack as a support for climbing. A manhole ladder should never be removed while a worker is in the manhole unless absolutely necessary. In the instance of a ladder being removed to make it easier to rescue a worker, the topside attendant shall fully devote his or her attention and efforts to instituting a rescue using the worker's body harness and lifeline if necessary. The ladder shall be replaced as soon as practical.

    Note: The other workers in the hole should be warned that the ladder is to be removed in time to allow him or her to exit the hole if necessary.

14. Materials, tools, and equipment should be kept at a sufficient distance from the entrance to the manhole to avoid any hazard to the occupant from falling objects or from hot metal or spilled compounds.

15. Blowtorches and furnaces should be ignited before being lowered into manholes unless this creates additional hazards.

16. Rags, tape, refuse, and combustible and flammable materials should not be allowed to accumulate in a manhole.

17. Instrumentation shall be calibrated per manufacturer's instructions. [See 29 CFR 1910.269(e)(8)]. A record of calibration should be maintained.

18. Ground-fault circuit interrupters (GFCIs) shall be used for 120-V ac power unless such power is supplied by a portable or vehicle-mounted two-wire, single-phase generator rated not more than 5 kW, where the circuit conductors of the generator are insulated from the generator frame and all other grounded surfaces. (See Section 6.4).

19. All cables and insulated wires that do not have grounded conducting sheaths or shielding should be treated as bare conductors. They shall be considered energized unless approved methods have been used to determine that they are deenergized. Barricade or cover these conductors with protective equipment or devices that will be within reach of a worker's position.

20. Where multiple cables are present the cable to be worked on shall be identified by electrical means unless its identity is obvious. [See 29 CFR 1910.269(t)(5)]. Where cable has one or more abnormalities that could be an indication of an impending fault, the defective cable shall be deenergized, except when service load conditions and a lack of feasible alternatives require that the cable remain energized. In that case, employees may enter the manhole if they are protected by the affects of the failure by flash blankets or other devices capable of containing the adverse effects of the fault. [See 29 CFR1910.269(t)(7)].

7.10.2 WORKING ON ENERGIZED UNDERGROUND CABLES

In general, work should not be performed on energized underground cables. However, strictly external work, not requiring an appreciable change in location of the cable, may be performed under direct supervision. Energized cables that are to be moved shall be inspected for defects. [See 29 CFR 1910.269(t)(6)].

7.10.3 TERMINALS OF UNDERGROUND CABLES (POTHEADS)

Before work is started, the overhead line connections to a cable terminal upon which work is to be performed should be either:

1. Deenergized and grounded or

2. Disconnected and covered with protective equipment.

7.11 FERRO-RESONANCE

Ferro-resonance can generate overvoltages of up to 12 times line-to-ground source voltage upon opening of a single-phase device or a poorly synchronized three-phase device. Violent failure can occur, exposing personnel to the high-voltage failure and accompanying conditions. Ferro-resonant conditions can result in damage to lightning arresters, switching devices, buried cable, transformers, and associated equipment.

Ferro-resonance can be initiated when all of the following elements are present and the switching means at dip point or takeoff is either a single-phase device or an unsynchronized three-phase device that does not operate all phases within 1/2 cycle:

i. System grounded at the source but with no ground at the transformer bank, such as a transformer or transformer bank connected delta on a grounded-wye system.

ii. Shielded cable or overhead conductor length sufficient to create the capacitance necessary.

iii. Transformer size that permits saturation of the iron core at the operating voltage

iv. Transformer unloaded or very lightly loaded.

Prevention or control of ferro-resonance may be accomplished by any of the following measures:

1. Using a wye-wye transformer connection with both neutrals grounded and tied to the system neutral.

2. Using only phase-to-neutral (not phase-to-phase) transformer connections for single-phase transformers.

3. Limiting length of underground cable between transformers and single-pole or poorly synchronized three-pole switching devices.

4. If single-pole or poorly synchronized switching devices must be used, ensuring that transformer and underground cable are loaded in excess of 2% resistive load of the transformer capacity.

5. If transformer primary is ungrounded-wye, temporarily grounding the neutrals of the transformers being switched.

6. Installing close-coupled, high-speed, three-pole switching devices to minimize the duration of the single-phase condition during opening and closing of the circuit.

8.0 TEMPORARY WIRING

It is required that temporary wiring comply with all the requirements pertaining to permanent wiring unless specific exceptions are stated, which can be found in NEC Article 527.

The following codes and standards will aid in designing, installing, and inspecting temporary wiring methods and using portable electric hand tools.

1. Articles 230, 527, and 400 of the National Electrical Code (NEC)

2. Chapter 4 of NFPA 70E, Standard for Electrical Safety in the Workplace.

8.1 REQUIREMENTS AND INSTALLATION CONDITIONS OF USE

Temporary electrical installations shall be allowed during periods of construction, remodeling, maintenance, repair, or demolition of equipment or structures or for experiments and developmental work. However, such temporary installations are not substitutes for permanent installations and shall be removed as soon as the construction, remodeling, experiment, or other special need is completed.

8.1.1 CONTACT PREVENTION

Except as modified in Article 527, temporary wiring shall meet all the requirements of the NEC for permanent wiring to prevent accidental contact by workers or equipment.

8.1.2 VERTICAL CLEARANCES

Vertical clearance of wires, conductors, and cables above ground shall meet the requirements of NEC.

8.1.3 WET LOCATIONS

Conductors with nonrated weather-proof insulation shall not be enclosed in metal raceways or used for wiring in tanks, penstocks, or tunnels. Receptacles used in damp or wet locations shall be approved for the purpose. When a receptacle is installed outdoors (outdoors is considered a wet location), it shall be contained in a weatherproof enclosure, the integrity of which would not be affected when an attachment plug is inserted.

All temporary lighting strings in outdoor or wet locations, such as tunnels, culverts, valve pits, outlets, and floating plants, shall consist of lamp sockets and connection plugs permanently molded to the hard service cord insulation.

8.1.4 SUPPORTS

Bare or open conductors shall be insulated from their supports. This requirement prevents arcing, sparking, or flash-over to grounded objects. Open wiring for temporary installations is only allowed as per NEC Section 527.

8.1.5 CONDUIT

Temporary wiring installed in conduit shall have bushings at all outlets and terminals to prevent abrasion and damage to the insulation.

8.1.6 LIGHTING

All lamps for general illumination should be protected from accidental contact or breakage. Metal-case sockets shall be grounded.

Temporary lights shall not be suspended by their electric cords unless cords and lights are designed for this means of suspension. Temporary lighting used in damp, wet, or hazardous areas shall be marked as suitable for use in those locations.

Portable electric lighting used in wet or other conductive locations (for example, drums, tanks, and vessels) shall be operated at 12V or less. However, 120-V lights may be used if protected by aground fault circuit interrupter (GFCI).

Receptacles on construction sites shall not be installed on branch circuits that supply temporary lighting.

8.1.7 CONFINED SPACES

When temporary wiring is used in tanks or other confined spaces, an approved disconnecting means (identified and marked) shall be provided at or near the entrance to such spaces for cutting off the power supply in emergencies.

Portable electric lighting used in confined wet or hazardous locations such as drums, tanks, vessels, and grease pits shall be operated at a maximum of 12 V, be intrinsically safe, or be protected by a GFCI circuit.

8.1.8 EXPOSED SOCKETS AND BROKEN BULBS

Exposed empty light sockets and broken bulbs shall not be permitted. This rule is to protect personnel from accidentally contacting the live parts in the socket and being shocked.

8.1.9 GROUND FAULT PROTECTION FOR PERSONNEL

Temporary power to equipment used by personnel shall be protected by GFCI devices, where required, or included in an assured equipment grounding conductor program, where permissible. See NEC Section 527 and NFPA 70E Chapter 4 for further information.

8.1.10 WIRING METHODS

The requirements for temporary wiring for power and lighting purposes include provisions for wire connections, junction boxes, and overcurrent protection, as well as the use of conductors. See NEC Article 527.

8.1.10.1 SERVICE CONDUCTORS

Service conductors shall comply with all the provisions of Article 230 in the NEC when they are used as wiring methods to supply temporary power systems.

8.1.10.2 FEEDER CONDUCTORS

Feeders are the conductors that transmit power from the service equipment to the distribution panelboard or between the main disconnect and the branch circuit over current devices (circuit breakers, fuses). Feeders for temporary wiring shall originate inside an approved distribution center, such as a panel board, that is rated for the voltages and currents the system is expected to carry. Some equipment is manufactured specifically for temporary use.

Feeders can be run as cable assemblies, multiconductor cords, or cables with two or more conductors each with their own insulations, run together in the same cord or cable.

8.1.10.3 BRANCH CIRCUIT CONDUCTORS

Branch circuits are the conductors between the last overcurrent device in an electrical system and the outlets, such as receptacles, lighting outlets, and outlets for electrical equipment wired directly into a circuit. Branch circuits for temporary wiring shall originate inside an approved panelboard or power outlet that is rated for the voltages and currents the system is expected to carry. As with feeders, branch circuit conductors can be contained within multiconductor cord or cable assemblies.

8.1.10.4 NONMETALLIC SHEATHED CABLE

Nonmetallic sheathed cable shall be used as allowed by the NEC and as follows:

1. Along studs, joists, or similar supports closely following the building finish or running boards when 7 ft 8 in. or more above the floor

2. When firmly attached to each cabinet, box, fitting, or fixture by means of a cable clamp.

Nonmetallic sheathed cable shall not be used where precluded by the NEC as follows:

1. As portable extension cords

2. Lying on the ground subject to any type of traffic

3. Where subject to frequent flexing

4. As service entrance cable.

See Figure 8-1 for a detailed illustration of installing temporary wiring methods.

8.2 USING ASSURED EQUIPMENT GROUNDING CONDUCTOR PROGRAM

Where GFCI devices are not used (See Section 2.7), the employer shall establish and implement an assured equipment grounding conductor program on construction sites covering

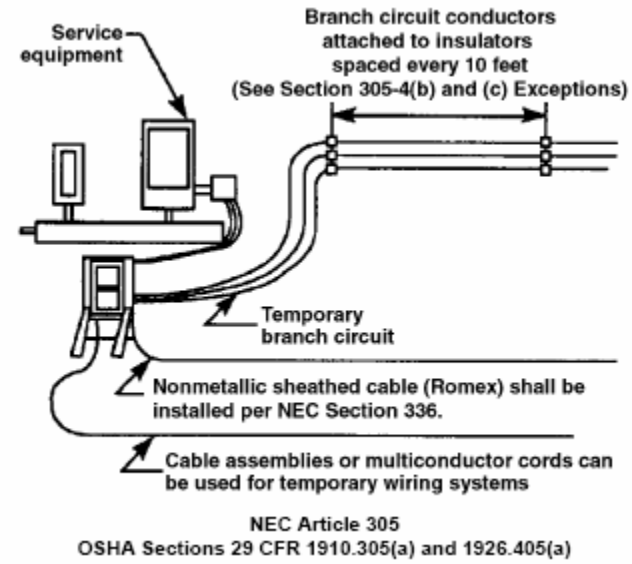

Figure 8-1. Cables, cable assemblies, or multiconductor cords can be used for temporary wiring systems under certain conditions of use.

all cord sets, receptacles that are not a part of the building or structure, and equipment connected by cord and plug that are available for use or used by employees. This program shall comply with the following minimum requirements:

1. A written description of the program, including the specific procedures adopted by the employer, shall be available at the job site for inspection.

2. The employer shall designate one or more competent persons to implement the program.

3. Each cord set, attachment cap, plug and receptacle of cord sets, and any equipment connected by cord and plug, except cord sets and receptacles that are fixed and not exposed to damage, shall be visually inspected before each day's use for external defects such as deformed or missing pins or insulation damage and for indications of possible internal damage. Equipment found damaged or defective shall not be used until repaired.

4. The following tests shall be performed on all cord sets, receptacles that are not a part of the permanent wiring of the building or structure, and cord-and-plug connected equipment required to be grounded:

    a. All equipment grounding conductors shall be tested for continuity and shall be electrically continuous.

    b. Each receptacle and attachment plug shall be tested for correct attachment of the equipment grounding conductor. The equipment grounding conductor shall be connected to its proper terminal.

5. All required tests shall be performed:

    a. Before first use

b. Before equipment is returned to service following any repairs

c. Where there is evidence of damage.

d. At intervals not to exceed 3 months, except that cord sets and receptacles which are fixed and not exposed to damage shall be tested at intervals not exceeding 6 months.

6. The employer shall not make available or permit the use by employees of any equipment that has not met the requirements of this section.

7. Tests performed as required in this section shall be recorded. This test shall identify each receptacle, cord set, and cord-and-plug-connected equipment that passed the test and shall indicate the last date it was tested or the interval for which it was tested. This record shall be kept by means of logs, color coding, or other effective means and shall be maintained until replaced by a more current record. The record shall be made available on the job site

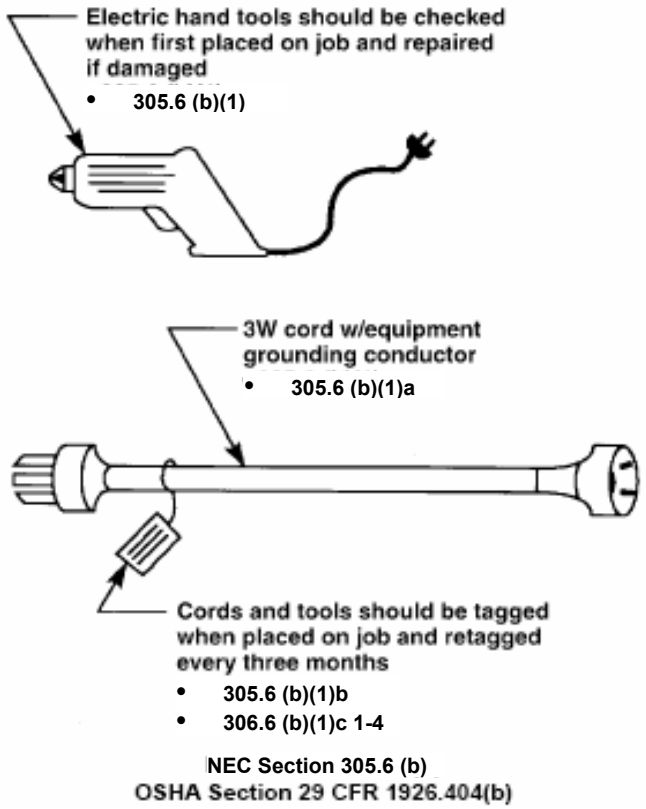

Figure 8-2. An assured equipment grounding program may be used if approved by authority having jurisdiction.

8.3 PORTABLE ELECTRICAL TOOLS AND EQUIPMENT

The electrical preventive maintenance (EPM) program should include the essential ingredients of Chapter 17 of NFPA 70B, Portable Electrical Tools and Equipment, and ANSI/UL 45,

Portable Electric Tools. This includes employee training, maintenance, cord and attachment plug care, extension cords, major overhauls, and leakage current testing.

8.3.1 INSPECTION AND MAINTENANCE

Portable electric tools and equipment such as cords, plugs, and GFCIs should be inspected before use by both the issuer and the user for signs of chaffing, cracking, wear, or other forms of faulty insulation; evidence of a faulty grounding conductor, cracked plug, or receptacle housing; bent or missing plug or connector prongs; dead front plugs, receptacle, or connectors; a missing, bent, or otherwise abused switch; or an improperly functioning trigger lock (dead-man's switch). While in use, tools and equipment should be observed for proper operation, including any signs of overheating or excessive sparking. Portable electric tools, equipment, and GFCIs should be inspected or trip tested by the user each day before use. Signs of a defect shall require the return of the device for repair.

8.3.2 CONDITIONS OF USE

Portable electric tools, equipment, and GFCIs shall not be used in hazardous locations unless marked to indicate suitability for such use.

Portable electric tools and equipment shall not be handled or suspended by their cords. Tools and equipment shall be used only for their intended purpose, and when guards are required, such guards shall be in place and functional.

Tools and equipment shall be grounded via the case, double-insulated, specially approved low voltage types, or self-contained, battery-operated.

Tools and equipment used in damp areas should be approved for such use. Generally, electrical tools are not approved for use in wet or damp areas without other means of protection.

8.3.3 USE OF EXTENSION CORDS

Use of extension cords should be minimized. Such cords shall be suitable for the intended use, such as waterproof connectors for wet or damp areas, and are subject to the same conditions as the tool or equipment cord. Generally, daisy chaining of extension cord sets is prohibited unless specifically allowed by the manufacturer and listed for this application.

Extension cords should be visually inspected before each use.

Extension cord sets used on construction sites and used with portable metal electric tools and appliances shall be of three-wire type and shall be designed for hard or extra-hard usage. Flexible cords used with temporary and portable lights shall be designed for hard or extra-hard use. OSHA recognizes hard-service cord (types S, ST, SO, and STO) and junior-hard service cord (types SJ, SJO, SJT, and SJTO) as suitable for extra-hard and hard use.

Note: Extension cords approved for outdoor use may be identified by "outdoor" or "W-A" on the jacket.

Flexible cord sets shall be listed as an assembly by a national recognized testing laboratory (See Section 2.5). Flexible cord sets used on construction sites shall contain the number of

conductors required for the circuit plus an equipment grounding conductor. The cords shall be hard use or extra-hard use as specified in the NEC.

8.3.4 DOUBLE INSULATED TOOLS

The NEC references the use of Double Insulated Tools in UL Standard UL 1097 "Double Insulation Systems for Use in Electrical Equipment" provides the requirements for equipment marked "Double Insulation" or "Double Insulated". Since the end product standard take precedence, the end-product UL Standard should also be consulted when there are questions pertaining to products that require double insulation.

Double insulation is a system comprised of two insulation systems (basic and supplementary) that are physically separated and are not subjected to temperature, contaminants and other deteriorating factors at the same time.

Basic insulation is applied to live parts to provide protection against electrical shock. Supplementary insulation is independent of the basic insulation and provides protection against electrical shock in case of failure of the basic insulation. Also of importance is the reinforced insulation which consists of one or more layers of insulating material that, in itself, provides the same degree of protection as double insulation.

For example, two layers of insulation separating an armature lamination from an armature conductor is not double insulation. This is reinforced insulation. To achieve a double insulated system, one layer of insulation separates the armature lamination from the armature conductor (basic insulation) and an insulating sleeve provides a second layer between the armature lamination and the motor shaft (supplementary insulation).

Generally, double insulated equipment is constructed so that double insulation is provided between all live parts and (1) the accessible surfaces of the equipment, and (2) all inaccessible parts and surfaces that are conductively connected to the accessible surfaces of the equipment.

Under certain conditions, reinforced insulation systems are acceptable when applied to brushcaps; brushholders; commutator and end turns of armature winding switches; power supply cords; and internal wiring.

Power supply cords for double-insulated tools shall be jacketed and shall not include a grounding conductor.

"Double insulated" or "double insulation" must be permanently marked on the tool. In addition the double insulated symbol (a square within a square) may be used.

9.0 ENCLOSED ELECTRICAL/ELECTRONIC EQUIPMENT

9.1 PURPOSE

This section provides guidelines to

1. complement existing electrical codes and recommend industry standards,

2. improve electrical safety in the work environment for personnel within the DOE complex.

3. eliminate the ambiguity and misunderstanding in design, construction and implementation requirements for electrical/electronic equipment, and

4. assist the Authority Having Jurisdiction in providing information for acceptance of equipment within the scope of this document.

9.2 SCOPE

This section addresses enclosed electrical/electronic equipment electrical safety guidelines which are not specifically addressed elsewhere in the *Electrical Safety Handbook.*

These types of equipment include: instrumentation and test consoles; enclosed electrical/electronic equipment; other laboratory diagnostic electrical/electronic equipment (stationary or mobile) mounted in or on an enclosure, rack or chassis; and special electrical/electronic equipment facility requirements.

9.3 GROUNDING AND BONDING

Many ground system types exist within electrical equipment. All metal parts of electrical equipment enclosures and chassis shall be bonded and grounded as per the NEC. The methods chosen to avoid ground loops and reduce noise shall meet the requirements of the NEC (Article 250.6).

9.3.1 OBJECTIONAL CURRENT OVER GROUNDING CONDUCTORS

Enclosed Electrical/Electronic equipment has both power and signal conductors entering and leaving these enclosures. Objectionable currents and noise may be the result of the design or installation of conductors and equipment and their grounding locations. NEC Section 250-6 addresses these objectionable currents and noise (See Section 10.9.2.1).

NEC Section 250-6 must be used with care because it seems to give blanket authority to do whatever is necessary to stop objectionable currents from flowing in the grounding system. This is not the intent. This article (250.6D) specifically indicates that the introduction of noise or data errors in electronic equipment shall not be considered objectionable currents, as addressed therein. Therefore, such objectionable currents must be handled in other ways. NEC Section 250.6 principally deals with objectionable currents that can flow over grounding conductors due to severely unbalanced loads or improper installation practices. NEC Article 250.96(B) provides requirements for isolation of grounding circuits to reduce electrical noise (EMI). Because of the complexity and number of interconnections of most grounding systems, the NEC allows

modifications of the grounding system and connections in order to address such problems. Those permitted:

1) Arrangement to prevent objectionable current. Grounding of electrical systems, circuit conductors, surge arresters, and conductive noncurrent-carrying materials and equipment shall be installed and arranged in a manner that will prevent an objectionable current over the grounding conductors or grounding paths.

   Use of a single-point grounding system, as well as meeting the other requirements of Article 250, will usually overcome problems.

2) Alterations to stop objectionable current. If the use of multiple grounding connections results in an objectionable current, one or more of the following alterations are permitted to be made, provided that the requirements of NEC Articles 250.4(A)(5)(B)(4), are met. Such permitted alterations are:

   1. Discontinue one or more, but not all, of the grounding connections;

   2. Change the locations of the grounding connections;

   3. Interrupt the continuity of the conductor or conductive path interconnecting the grounding connections; and/or

   4. Take other suitable remedial action satisfactory to the authority having jurisdiction.

3) Temporary currents not classified as objectionable currents. Temporary currents resulting from accidental conditions, such as ground-fault currents, that occur only while the grounding conductors are performing their intended protective functions shall not be classified as objectionable. This does not prohibit changes in the system to correct excessive current during a fault condition.

4) Limitations to permissible alterations. The intent of NEC Section 250.6 is not that of permitting electronic equipment to be operated on AC systems or branch circuits that are not grounded as required by Article 250. Currents that introduce noise or data errors in electronic equipment are not considered to be the objectionable currents addressed in this Section.

   Voltage, differences and thus objectionable currents, may exist because impedances to ground are not equal throughout a grounding system due to variations of the resistance of the earth, improper connections, or other problems.

   Even though voltage differences allow unwanted currents to flow in the grounding conductors, and induced noise may travel over this path, it is not to be used as a reason to disconnect all grounding connections to any system component. At least one grounding connection must remain.

9.3.2 EQUIPMENT GROUNDING CONDUCTOR

The equipment grounding conductor of a power-supply cord or interconnecting cable should be size in accordance with NEC Article 250.122 and the associated Table 250.122. The minimum size equipment grounding conductor is based on the total rating of the enclosed equipments in

amperes. Note that the minimum size equipment grounding conductor may be smaller than the size for the current-carrying conductors, i.e. the grounded (neutral) and ungrounded conductors, which are sized per NEC Article 310.15 – usually following Table 310.16.

9.3.3 ENCLOSURE GROUNDING AND BONDING

Enclosure grounding and bonding should comply with the following requirements: (See Figs. 9-1 thru 9-3)

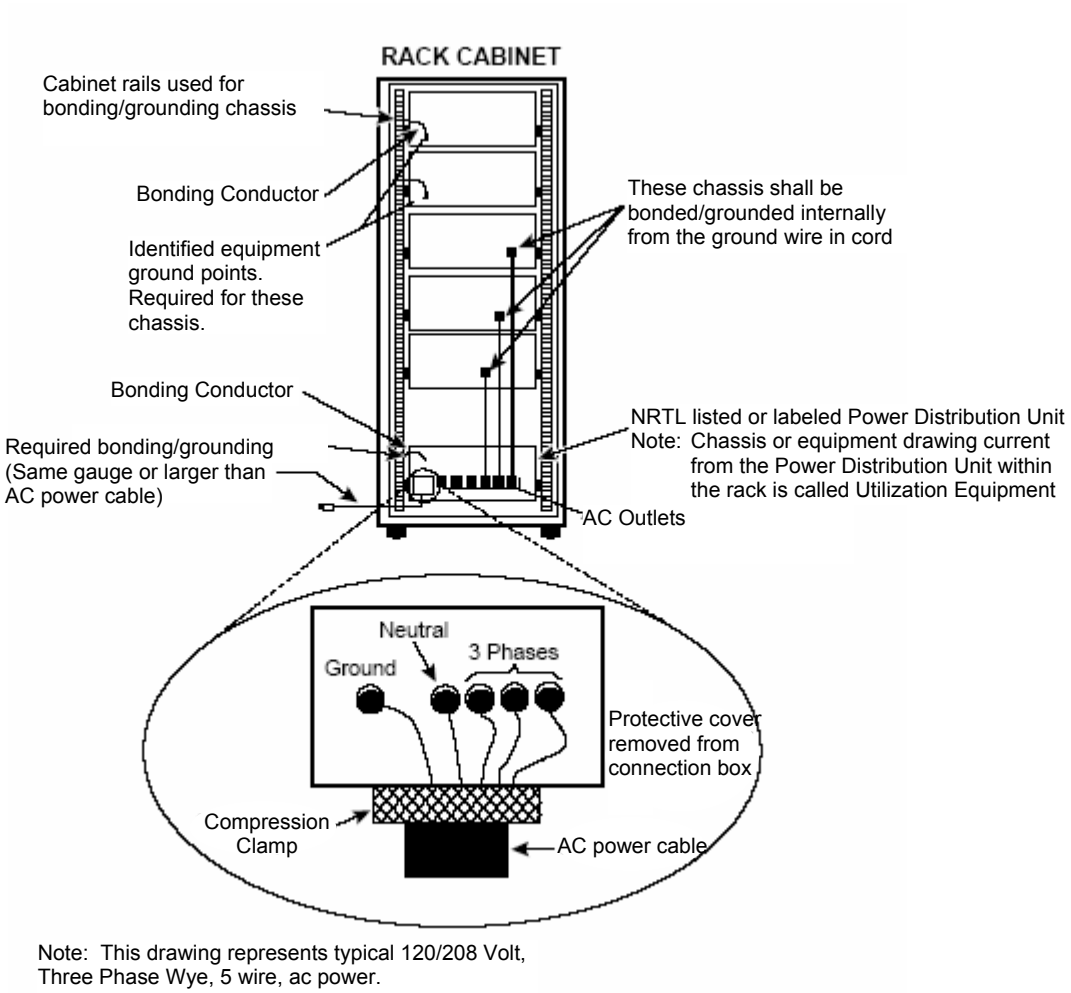

Figure 9-1

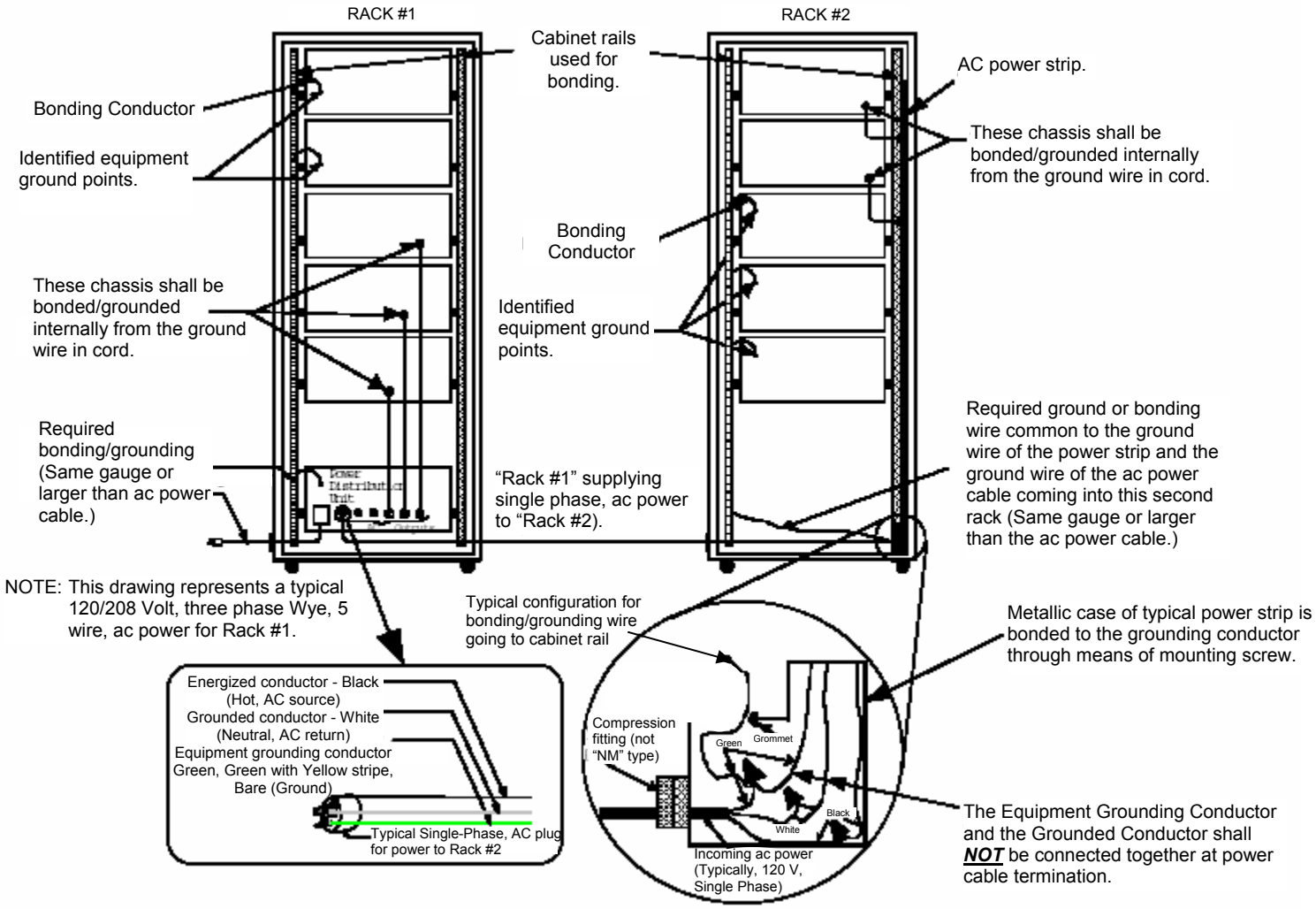

Figure 9-2

1) Have a common grounding or bonding bus (normally a cabinet rail).

2) When the enclosure contains more than one bay, bond all grounding or bonding busses together.

3) All mounted chassis within rack cabinets shall have a grounding or bonding conductor attached to the common grounding or bonding bus when the chassis is not grounded or bonded through the power cord.

4) The grounding or bonding conductor shall be permanent and continuous.

5) Subassemblies mounted in other types of enclosures should be bonded by adequate preparation of the mounting surfaces or by the use of a bonding conductor.

6) To provide protection against grounding or bonding conductor breakage, conductors between the common grounding or bonding bus and moveable chassis should be braided cable or stranded wire.

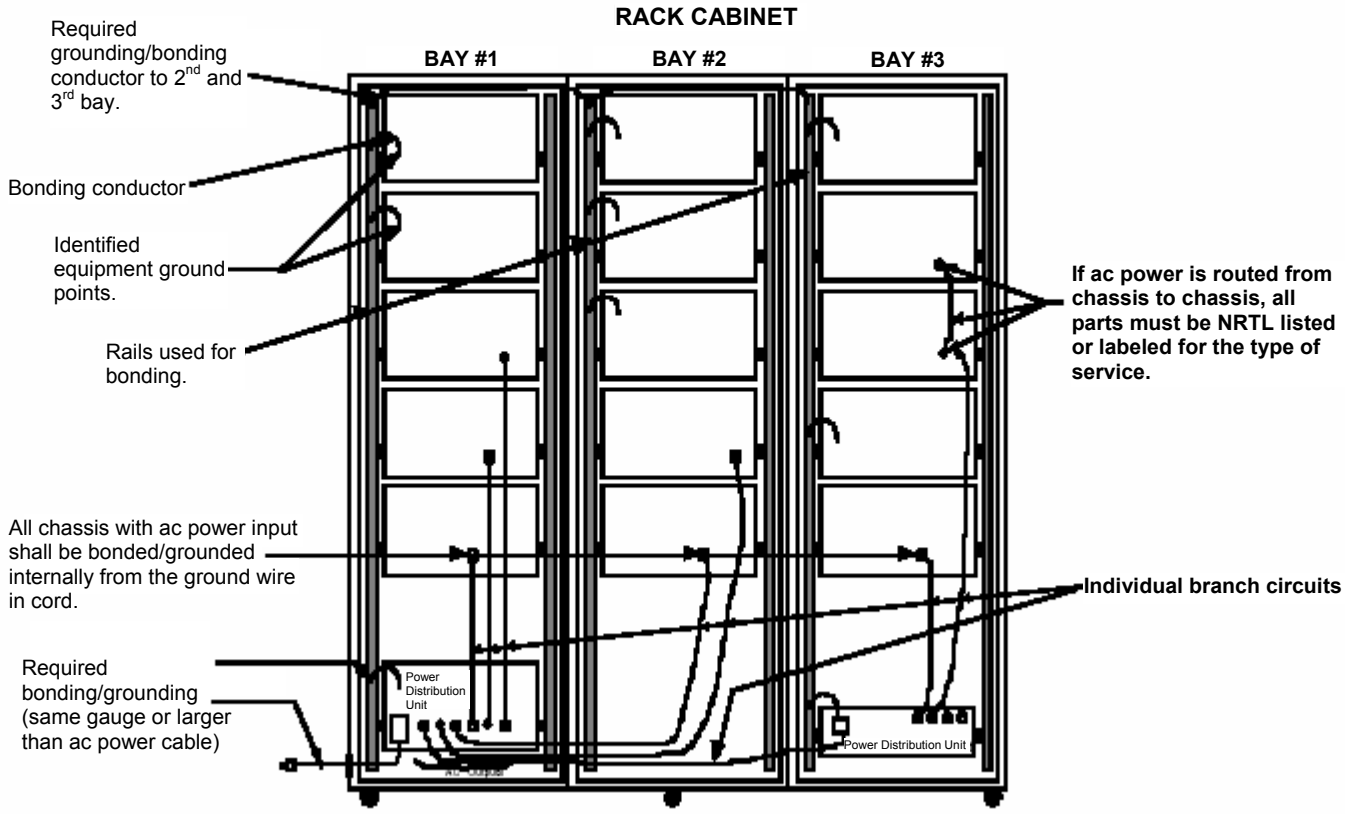

NOTES: 1. This drawing represents typical 208/120-V, Three Phase Wye, 5 wire, ac power for Rack #1.
2. Multiple bays must be bonded together even if multiple Power Distribution Units are installed in separate bays.

Figure 9-3

All grounding or bonding points should be tight for good continuity, identified by green color, permanently labeled, and properly prepared by cleaning metal surfaces to bare metal or by the use of serrated bushings. Anodized aluminum must be cleaned to bare metal.

The resistance across the bonding point should be very low, so that heating stress effects due to power loss across the bonding point are minimized. If a measurement is required, the method of measurement is to be determined by the user. The user may determine a maximum resistance, e.g., 0.1 ohm.

9.3.4 SPECIAL CONSIDERATIONS

Systems feeding power isolation transformers must continue the equipment grounding conductor to the equipment or the ungrounded equipment must be guarded and labeled.

For two-wire cord connected equipment, an equipment grounding connector should be installed according to the manufacturer's instructions.

9.4 RACK POWER DISTRIBUTION

The following guidelines will provide the necessary information to correctly install power distribution equipment within instrumentation racks containing electrical and electronic equipment.

9.4.1 GENERAL REQUIREMENTS APPLYING TO ALL AC POWER EQUIPMENT WITHIN OR ATTACHED TO INSTRUMENT RACKS

9.4.1.1 LOADS

Knowledge of the loads that will be connected within a rack cabinet is necessary before starting design of a rack power distribution system. All components must be sized correctly for the loads and should provide for expansion.

Equipment enclosures may or may not contain a power distribution unit. A rack power distribution unit contains a main overcurrent protection device and multiple branch circuits that are individually protected against overcurrent. Without a power distribution unit, the power wiring is considered part of one branch circuit.

Branch circuit loading shall meet the requirements of Article 210 of the NEC. (See NEC Sections 210.21 through 210.23).

External convenience outlets should be connected to a separate circuit breaker.

Where 3 phase 4 wire service is utilized, the loads should be evenly distributed on all phases and there should be consideration of sizing the neutral conductor for certain loads (such as computer equipment) due to the presence of harmonic currents. (See NEC Sections 210.4 and 310.10).

9.4.1.2 OTHER GENERAL EQUIPMENT REQUIREMENTS

Rack power distribution components or assemblies must be listed by a Nationally Recognized Testing Laboratory (NRTL), or have the approval of the Authority Having Jurisdiction (See Section 2.5).

9.4.2 CONDUCTORS AND CABLES SPECIFIC REQUIREMENTS.

Each type of internal wiring for equipment or an accessory shall be acceptable for the particular application when considered with respect to (1) the current, ambient temperature, voltage, and other conditions of service to which the wiring can be subjected, and (2) exposure to oil or grease.

The term "cables" refers to groupings of wires typically used for control signals, data, or DC power. The term "cords" refers to AC power cords.

The basic insulation on each wire shall be rated for at least the maximum voltage to which the wire is connected, and for at least the temperature it attains. Additionally, the insulation should be rated for the maximum voltage of nearby conductors and wire to which each wire may be exposed. Insulating tubing, sleeving, and tape shall be rated for at least the maximum voltage

against which it insulates, and for at least the temperature it attains. Power and signal wires should be routed separately within a chassis.

Wires shall be routed away from sharp edges, screw threads, burrs, moving parts, etc. Holes through which wires are routed shall have smooth, well-rounded surfaces, or shall have a bushing. Clamps for guides used for routing or wiring shall have smooth, well-rounded edges. Pressures exerted by such clamps should not cause cold-flow or otherwise deform the basic insulation.

9.4.2.1 FLEXIBLE CABLES

Flexible cables may be used:

1. Where flexible cables and attachment plugs are furnished by the manufacturer as part of the equipment to be mounted in the rack.

2. For connection of stationary equipment to facilitate their frequent interchange.

3. To prevent the transmission of mechanical vibration.

4. Where the fastening means and mechanical connections are specifically designed to permit ready removal for maintenance and repair.

5. For data processing cables approved as part of the data processing system.

6. For temporary wiring.

Where breaking or loosening of a circuit connection would render an electric shock or could result in a fire, such connection shall be made mechanically secure. Mechanical security of connections may be provided by crimped, closed ring or flanged lug, or a wrapping that forms at least an open U or by cable clamps, or by cable lacing, insulating tubing, or similar means.

9.4.2.2 STRAIN RELIEF

Wiring, cords, or cables shall be provided with strain relief as required to prevent damage.

Additional insulation may be required when the construction of the strain relief may damage the insulation. The use of type NM (Romex) cable clamps on flexible cords and cables is not permitted. Use listed or labeled clamps. The use of any metal clamp or other means that may cause undue stress on the cables within or external to instrument racks is not allowed. Cord and cable support for AC power cable or other heavy duty or large diameter cables must distribute the load over a large area of the outer covering of the cable.

9.4.2.3 SEPARATION OF VOLTAGES

Insulated conductors of different circuits shall be separated or segregated from uninsulated live parts connected to different circuits unless provided with insulation suitable for the highest voltage involved.

Segregation of insulated conductors may be accomplished by clamping, routing, or equivalent means that provide permanent separation from insulated or uninsulated live parts of a different circuit.

Loose strands of stranded internal wiring, connected to a wire-binding screw, shall be prevented from contacting other uninsulated live parts not always of the same potential and from contacting noncurrent carrying metal parts. This may be accomplished by use of pressure terminal connectors, soldering lugs, crimped eyelets, or soldering all strands of the wire together.

9.4.2.4 OTHER CONCERNS

Conductors shall not be bundled together in such a way that the temperature rating of the conductors is exceeded. Bundled conductors may require derating of their ampacities. For example, see NEC Article 310.15(B)(2) and Table 310.15(B)(2)(a)

Flexible cord should be listed or labeled and used only in continuous lengths without splice or tap when initially installed.

Repairs are permitted if the completed splice retains the insulation, outer sheath properties, and usage characteristics of the cord being spliced. In most instances, the entire length of flexible cord should be replaced, in order to assure integrity of the insulation and usage characteristics.

9.4.3 POWER SWITCHES AND INTERLOCK DEVICES SPECIFIC REQUIREMENTS

For all electrical/electronic enclosures utilizing power switches or interlocks, the following should apply:

1. Interlocks should be utilized where exposed voltages (50 volts or greater) are present in equipment and access to the exposed live parts is not controlled (See Section 9.6.4).

2. Ensure all line side unprotected contacts are guarded on interlocking contactors or other switching equipment.

3. Be suitable for the conditions, use, and location.

4. Circuit breakers used for the equipment power switch will be rated for switching under load.
   5. Provide provisions for Lockout/Tagout requirements.

9.5 CHASSIS POWER DISTRIBUTION

Manufacturers are responsible for determining the safety of such chassis and/or enclosures and for providing documentation showing how that determination was made. Listed equipment should be selected by design when available. Unlisted commercial equipment and in-house fabricated equipment shall be approved by the local Authority Having Jurisdiction.

9.5.1 AC POWER DISTRIBUTION

9.5.1.1 CHASSIS BONDING AND GROUNDING

Metal chassis shall be effectively bonded to a main grounding point in the rack cabinet where necessary to assure electrical continuity and shall have the capacity to conduct safely any fault current likely to be imposed on it. (NEC Section 250.96)

In a chassis with ac service connected to it, the grounding terminal of its receptacle shall be internally bonded to the chassis frame. (NEC Section 250.146)

If solder is used, the connection of the equipment grounding conductor shall not depend on solder alone. (NEC Section 250.8)

The leakage current of cord connected equipment should be very low.

9.5.1.2 CONNECTIONS, CONNECTORS, AND COUPLINGS

Input/output ac power connections to the chassis shall comply with NEC requirements.

The exposed, noncurrent carrying, metal parts of panel mount connectors operating at 50 volts or greater shall be bonded to the chassis.

Plugs and sockets for connecting any AC power source shall be NRTL listed for the application. (Ref. ISA-S82.01-1992, Section 6.10.3.a)

AC power plugs and sockets shall not be used for purposes other than the connection of AC power.

Connectors operating at 50 V or greater shall be listed, rated or recommended for their intended use.

Any connector used to provide power at 50 V or greater shall not allow personnel to make inadvertent contact with the power source.

If plug pins of cord-connected equipment receive a charge from an internal capacitor, the pins shall not be capable of rendering an electric shock or electric burn in the normal or the single fault condition 5 seconds after disconnection of the supply. Plug-in type connectors intended to be connected and disconnected by hand shall be designed so that the grounding conductor connection makes first and breaks last with respect to the other connections. [NEC Section 250.124(A)].

The following applies for all AC power connectors within or external to electrical/electronic enclosures:

1. There should be no exposed current-carrying parts except the prongs, blades, or pins.

2. The connector shall prohibit mating of different voltage or current rating than that for the device intended.

3. All connectors must be protected against overcurrent in accordance with their rated ampacity. (NEC Section 240.5)

4. Connectors must be NRTL listed for the application.

5. Use of MS, PT, or other non-approved connectors is not permitted except when justified to and approved by the AHJ.

If conditions require the use of a non-NRTL listed or labeled connector, such as a "MS"(military standard pin and socket type) or "PT" (similar to "MS" but smaller) type, for input/output ac

power, a warning label should be affixed next to the connector stating: "WARNING - POWER MUST BE REMOVED BEFORE CONNECTING/DISCONNECTING."

9.5.1.3 TERMINALS/LIVE PARTS

All terminals/live parts with a potential of 50 volts or greater shall be guarded to protect from accidental contact or bringing conductive objects in contact with them (NEC Section 110.27). Consult ANSI/ISA-S82.01-1988, Table 9-1 for spacing information regarding live parts.

All energized switching and control parts shall be enclosed in effectively grounded metal enclosures and shall be secured so that only authorized and qualified persons can have access.

9.5.2 DC POWER DISTRIBUTION

Guidelines for dc power distribution include:

1. The metal chassis or cabinet should not be used as a return path.

2. High-current analog or switching do power supplies should use separate return paths from digital circuits.

3. All of the guidelines pertaining to ac power such as grounding, proper wire size, high voltage, etc. should apply to do circuits as well.

An accessible terminal charged by an internal capacitor should be below 50 volts within 5 seconds after interruption of the supply.

As with ac power, avoid contacting do parts when working on a live chassis. The use of the appropriate class gloves should be considered when performing this type of work.

9.6 PROTECTIVE DEVICES FOR ENCLOSED ELECTRICAL/ ELECTRONIC EQUIPMENT

This section deals with the various protective devices commonly found in electrical/electronic equipment not discussed elsewhere.

9.6.1 SURGE ARRESTERS

The more common types of surge arresters used with electronic equipment are the Metal oxide varistor (MOV), avalanche diodes, and spark gap arresters. The type and electrical rating of the surge arrester is generally determined by the requirements of the circuit being protected, and by the amplitude and duration of the expected surge. (See ANSI/IEEE C62.11-1986.)

Metal oxide varistors and avalanche diodes are voltage-dependent devices whose impedance changes from a near-open circuit to a highly conductive level when subjected to transient voltages above their rated voltages. A MOV is considered "sacrificial" in that a portion of its material is literally burned-off each time such a surge is encountered. The response time of a MOV is limited to approximately 500 picoseconds while avalanche diodes can respond in approximately 50 picoseconds. Lead lengths can greatly increase the response times of these devices. The normal failure mode of both devices is a short circuit although sustained voltages well beyond the rating of the MOV can cause the device to rupture and result in an open circuit.

When used at a point on a circuit, a surge arrester should be connected between each ungrounded conductor and ground.

For power line applications, MOV manufacturers recommend a varistor be used with a fuse that limits the current below the level that MOV package damage could occur. In general, circuit breakers are not recommended for this application since circuit breaker tripping is too slow to prevent excessive fault energy.

Consult the manufacturer's application data sheets for more information.

9.6.2 FUSES

Fuses are temperature-sensitive, current-sensing elements that are generally used as short circuit protective devices in individual electrical chassis. The fusing characteristic, or opening time versus current, must be within the safe time/temperature characteristic of the device being protected.

Designers must carefully consider the load requirements in the fuse selection process, particularly when high surge currents may be encountered during initial turn-on. Operating time/current characteristics of the various types available can usually be found in fuse manufacturers catalogs. A fuse's interrupting current capacity must also be considered when connected to a power distribution system having a significant fault current capacity.

The voltage rating on a fuse shall be equal to or greater than the device's operating voltage.

In general, cartridge fuses should have a disconnecting means on the supply side, (NEC Section 240.40), and shall not be connected in parallel unless factory assembled and listed as a unit (NEC Section 240.8).

9.6.3 CIRCUIT BREAKERS

A chassis or cabinet shall not employ circuit breakers as "on/off' switches unless rated for the application by the manufacturer.

9.6.4 POWER INTERLOCK DEVICES

Cabinets and equipment having potentially dangerous currents and/or voltages present should have a means of controlling access, or a power interlock device designed to interrupt the power to the cabinet. Provisions should also be made to discharge any stored energy, such as in capacitors or inductors, to less than 50 volts within 5 seconds when the safety interlock is opened. Interlocks may not be used as a substitute for lockout/tagout. (29 CFR 1910.333(c)

9.7 DISCONNECTING MEANS

All enclosed electrical/electronic equipment shall be provided with a means for disconnecting it from each external or internal operating energy source. This disconnecting means shall disconnect all current carrying conductors.

9.7.1 GENERAL

Interlock systems are not a recommended disconnecting means for cabinets and equipment having potentially dangerous currents and/or voltages present. (See Section 9.6.4)

Permanently connected equipment and multi-phase equipment should employ a listed switch or circuit breaker as means for disconnection.

All cord-connected equipment should have one of the following as a disconnecting device:

1. A switch or circuit breaker,

2. Plug that can be disconnected without the use of a tool, or

3. A separable plug, without a locking device, to mate with a socket-outlet in the building.

Where equipment is connected to the source of supply by flexible cords having either an attachment or appliance plug, the attachment or appliance plug receptacle may serve as the disconnect (NEC Section 422.33).

Where a switch is not part of a motor, motor circuit or controller, the disconnecting means should be within 50 feet and in sight of the operator and marked as the disconnection device for the equipment.

Where a disconnecting means is not part of the equipment, the disconnecting means should be near the equipment, within easy reach of the operator during normal operation of the equipment, and marked as the disconnection device for the equipment.

If a disconnecting device is part of the equipment, locate it as close as practical to the input power source.

9.7.2 EMERGENCY SHUTDOWN

The emergency shutdown switch should be within arm's reach of the operator, be easily identifiable, deenergize all power to all equipment associated with the system, be separate from the routine on/ off switch, and be located to protect the employee from moving parts. However, the emergency shutdown switch should not disconnect auxiliary circuits necessary for safety (such as cooling).

9.7.3 SPECIAL CONSIDERATIONS

The disconnecting means should interrupt the source voltage for secondary or remote controlled equipment, such as those using thyristor controls. Do not rely on disconnecting the control voltage.

9.8 MARKING AND LABELING REQUIREMENTS

9.8.1 GENERAL MARKING REQUIREMENTS

For all chassis and rack cabinets (electrical, computer, power distribution, etc.), the manufacturer's name, trademark, or other descriptive marking of the organization responsible for the product should be identified.

Other markings for power requirements are:

1. Voltage.
2. Maximum rated current in amperes.
3. Wattage.
4. Frequency.
5. Duration.
6. Duty Cycle.
7. Other ratings as specified in the NEC.

(NEC Section 110.21)

9.8.2 HAZARD MARKING REQUIREMENTS

All enclosures containing exposed energized circuits over 600 volts nominal should be marked "Danger High Voltage Keep Out" with a label that is permanent. These areas shall be accessible to authorized personnel only. The label shall be placed in a noticeable location on the access panel to the enclosure. Mark all other hazards that are associated with the equipment.

9.8.3 OTHER REQUIREMENTS

All equipment markings shall be of sufficient durability to withstand the environment involved and should be large enough to read.

To obtain the correct chassis load requirements for marking and labeling, monitor individual chassis while under load. Many chassis have components that are not energized except under certain conditions.

A normal current draw may be a few amperes, but when the chassis is sourcing current to a load, the current draw may be much higher. Individual loads, internal and external, may be tabulated and added to determine the chassis current labeling requirements.

For rack cabinets with power distribution units, the outside of the rack cabinet should be labeled with the input parameters of the power distribution system installed within it.

For rack cabinets without power distribution units the outside of the rack cabinet should be labeled with the total current on the combined systems installed within it.

9.9 WORKING CLEARANCES

Clear working space and headroom shall meet the NEC requirements (see Figs. 9-4 and 9-5). The clear working space and passageways to this space should not be used for storage. At least one entrance of sufficient area shall be provided to give access to working space above electrical equipment. For example, 24 inches may be sufficient in depth and 30 inches in width with 6 ½ foot height

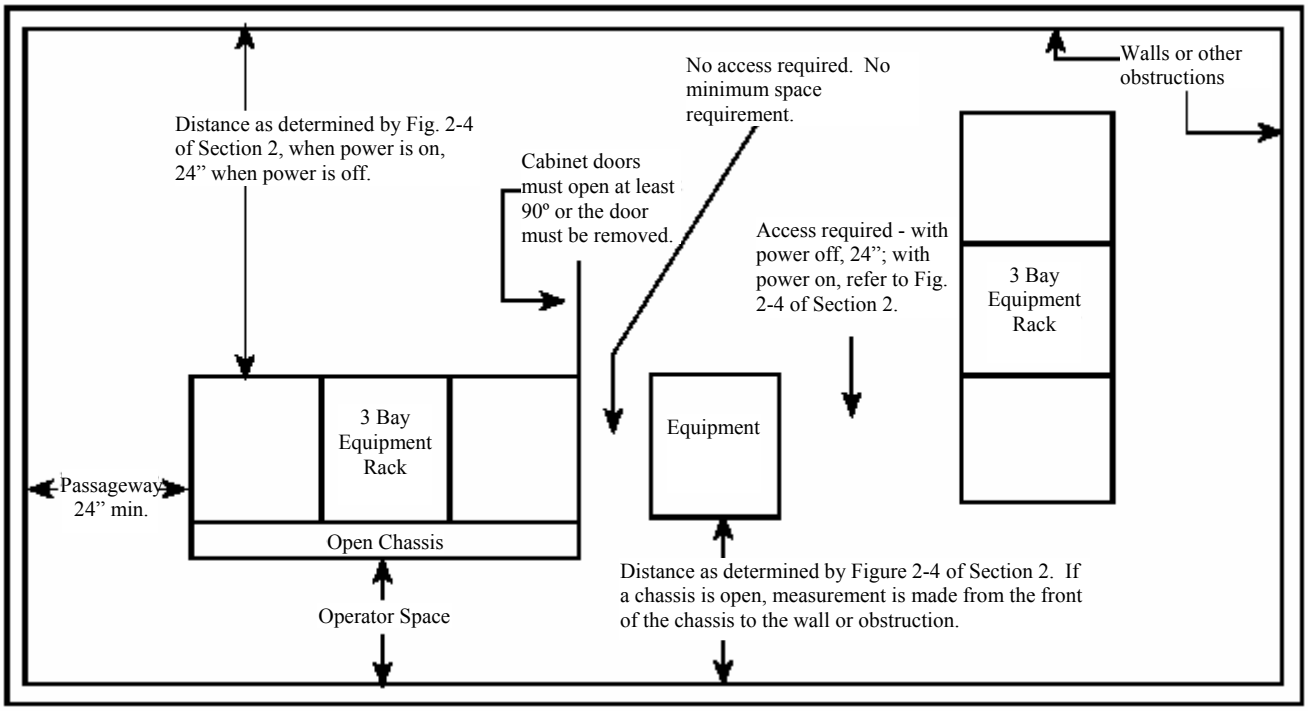

Fig. 9-4. Top View of Equipment Layout in a Room (Drawing is not to scale)

While maintenance, repair or calibration are being performed, personnel should identify clear working spaces via suitable means such as "Danger" or "Caution" barrier tape, or barricades to keep other personnel from entering the clear working spaces.

9.10 CABLE/UTILITY MANAGEMENT SYSTEM

9.10.1 USAGE WITH ENCLOSED ELECTRICAL/ELECTRONIC EQUIPMENT

In certain locations cable supports and/or enclosures are installed for dedicated usage with enclosed electrical/electronic equipment. For these situations it is acceptable for these cable/utility management systems to be utilized for the required purposes of the equipment. This may include a bundle of cables, hoses, and tubing that is required to be run from the equipment console to the unit under test. In these situations the use of a cable/utility management system is considered to be a part of custom-made equipment consisting of enclosed electrical/electronic

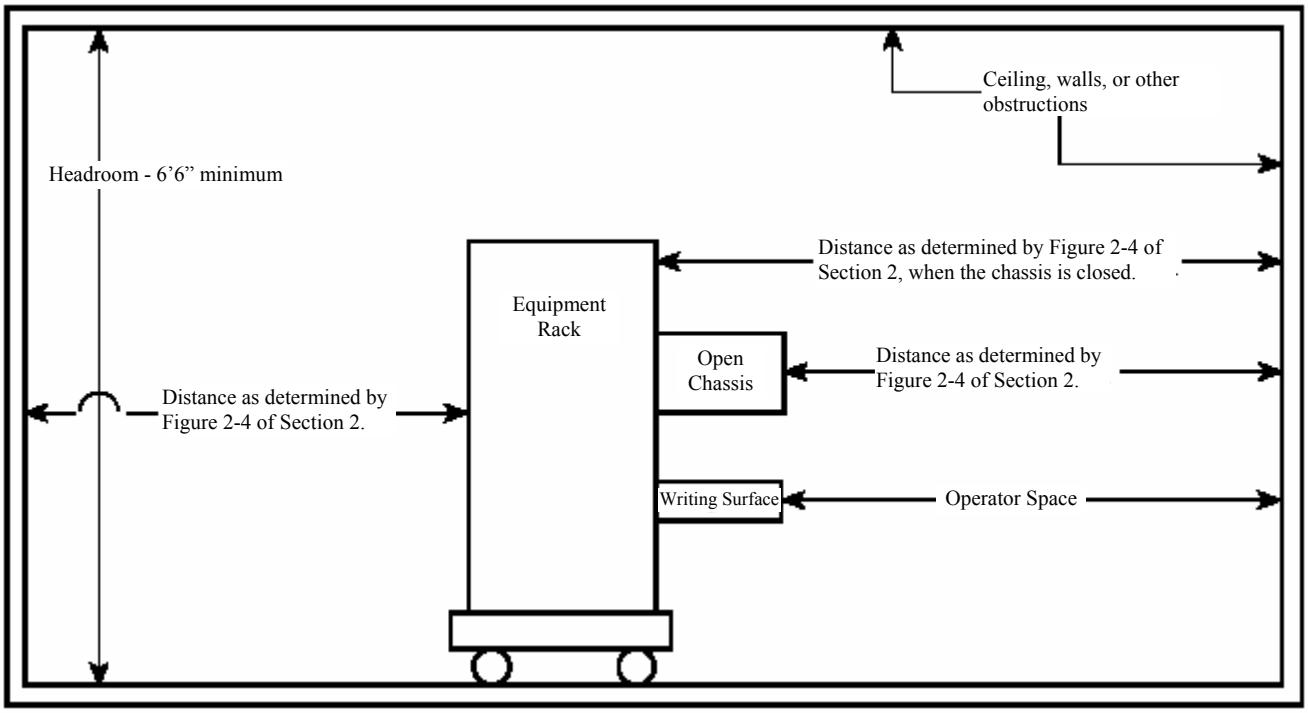

Fig. 9-5. Side View of Equipment Layout in a Room (Drawing is not to scale)

equipment, cabling, cable/utility management system, and unit under test with associated equipment (See Figure 9-6).

In cable/utility management systems where cables other than those of the equipment exist, the decision should be documented that any risk posed by the situation is acceptable for the operation to be performed and to the functions of the existing cables.

9.10.2 REQUIREMENTS

An assessment of any hazards identified with the equipment and the operation with which it is involved should be performed to assure safe operation of components in the cable/utility management system. Where any cable/utility runs include hazardous fluids or pressurized gases, the utilization of these utilities with the cables involved must be determined to be safe.

Metallic cable/utility management systems that support electrical conductors shall be grounded or bonded to the equipment. Grounding integrity should be checked by inspection by a qualified worker for all components with exposed metal parts. This inspection should be documented. Where cable/utility management systems are installed exclusively for electrical/electronic equipment usage and where these trays are metallic and not grounded or bonded, approved documentation shall exist stating the reason for not grounding or bonding the system (See Section 9.3.1).

Equipment cable/utility runs installed in cable/utility management systems should be visually inspected periodically. These inspections should be performed at the time of installation and any interval specified in the equipment documentation. Any inspection should, as a minimum, consist of:

1. A visual check for the integrity of cable jackets and visible shields;

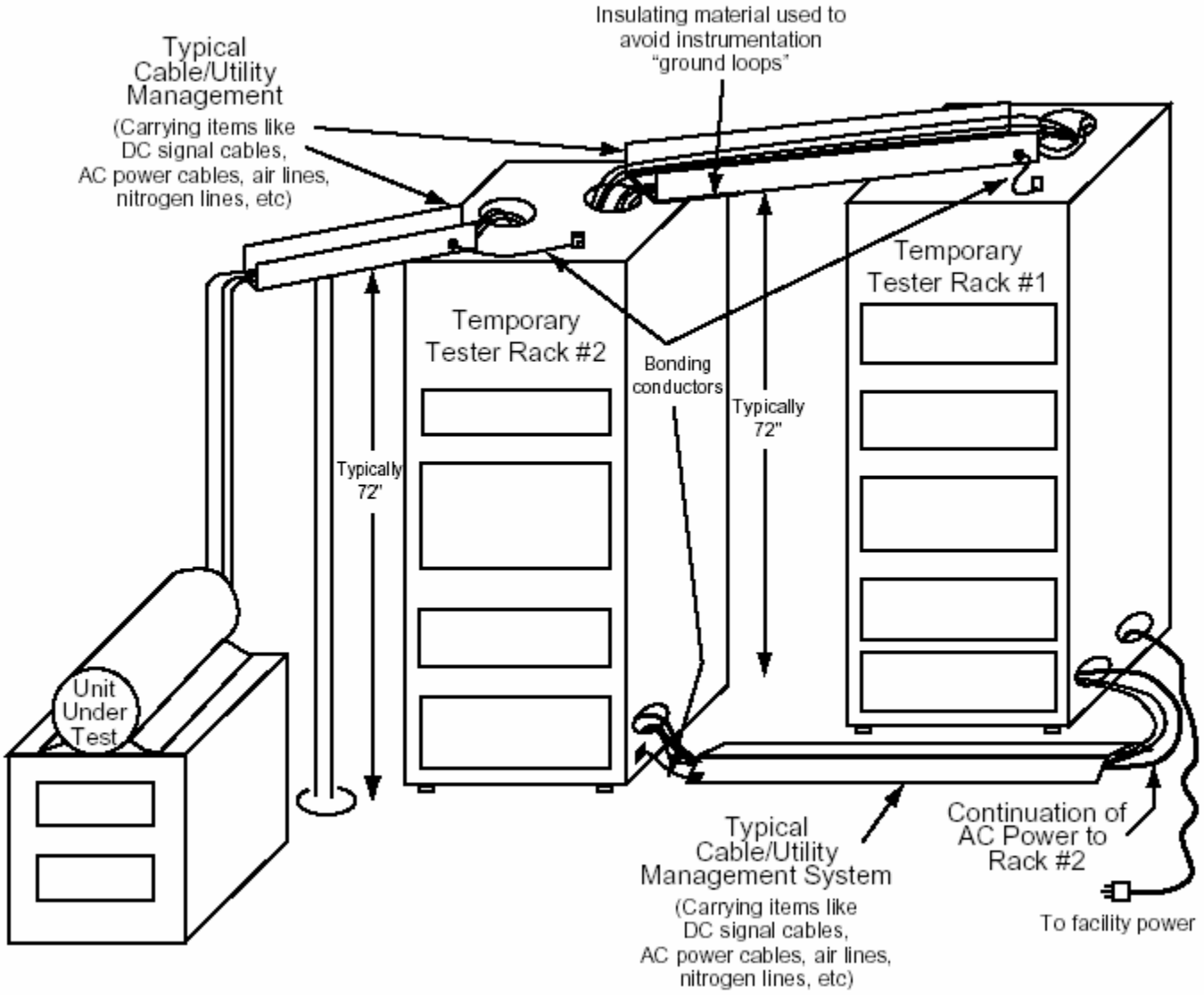

Figure 9-6

2. A check for the integrity of all utility hoses by looking and listening for leaks;

3. A visual check on all securing devices used to hold the bundle on the tray to assure the bundle is positioned properly and no damage has occurred;

4. A visual inspection on all bends for signs of pinching, cutting, exceeding minimum cable bending radius, or other damage; and

5. Documentation of all results of any inspection.

Supports shall be provided to prevent stress and physical damage to cables where they enter or exit cable/utility management systems.

9.11 ELECTRICAL SAFETY REQUIREMENTS FOR TESTER FACILITIES

The following is not intended to encompass all of the electrical design requirements which must be considered in planning electrical systems for facilities intended to accommodate testers. The information provided should, however, provide a guide to understanding for personnel who would be tasked with specifying facility electrical safety necessary to the testing environment.

Provisions for an adequate number of receptacle outlets and associated branch circuits to accommodate cord and plug connected equipment, testers, etc., in a facility must also be considered in specifying the electrical requirements.

For equipment that cannot tolerate power interruption, consideration should be given to the use of a continuously operating or standby uninterruptable power supply (UPS) or a generator.

9.11.1 AMPACITY OF FACILITY WIRING AND DISTRIBUTION EQUIPMENT

Consideration must be given to accommodating the anticipated load demand which may occur as a result of power supplied to the various possible combinations of electrical equipment connected to a particular branch circuit (See Section 9.4).

9.11.2 FACILITY GROUNDING AT TEMPORARY OR REMOTE SITES

Proper grounding is considered crucial to providing the safest possible electrical installation, from the standpoint of maximizing the safety of facility occupants and minimizing property damage and loss.

Designs for equipment to be used at temporary or remote sites must take into consideration the same grounding issues which may not be accommodated in the same manner as for permanent facility power wiring (See Section 9.3 and NEC Article 527).

9.11.3 FACILITY LIGHTNING PROTECTION

Lightning protection is required for facilities which will house enclosed electrical/electronic equipment while such equipment is involved with radioactive, explosive, and similarly hazardous materials or for facilities that are considered valuable or house valuable contents.

9.11.4 SURGE PROTECTION

In addition to facility lightning protection, the effects of surges resulting from lightning strikes to power distribution systems may be lessened by the use of lightning arrestors and suppressors installed at strategic points in the supply system to the facility. An assessment is necessary, addressing the consequences of lightning-induced surges, in order to determine the degree to which protection should be provided.

For additional information see Section 9.6.1.

9.12 ENCLOSED POWER ELECTRONICS

Power electronics equipment is equipment that uses electronic components and subsystems to control significant amounts of electrical energy. Examples of power electronics systems include:

1. Power supplies and modulators for laser systems;

2. Accelerators, magnets, x-ray systems, and other research equipment;

3. Radio and radar transmitters;

4. Variable speed motor drives; and

5. Induction heating systems.

All applicable portions of this section should be addressed due to the hazards involved with this type of equipment.

9.12.1 ENCLOSURES

Power electronics equipment should be constructed in all-metal enclosures for containment of fire, high energy, and electromagnetic radiation hazards.

The enclosures should support the housed equipment, provide strength to brace conductors against short circuit forces, and protect housed equipment against physical damage.

It is usually easier to provide barriers to protect the electronics enclosure from collision and missile hazards rather than strengthening the enclosure itself.

9.12.2 COMPONENT CLEARANCES

Enclosures must provide adequate clearance from energized parts. The required clearances depend on the shape of the conductor, the surface characteristics of the conductor and enclosure, the voltage characteristics, environmental conditions, and creepage. The breakdown strength along the surface of supporting insulators may require larger clearances than breakdown in air.

All power electronics enclosures shall provide adequate room for access to parts and subsystems for expected maintenance and modification. Consideration should be given to handling provisions for heavy parts and subsystems, access to test points and calibration adjustments, and work clearances for safe access to enclosure interiors.

Safe work on high-voltage equipment requires installation of manual grounding devices on exposed high-voltage conductors. Enclosure size shall provide adequate room to safely apply and remove grounding devices, and permit grounding devices to remain in place without interfering with expected work. (See Section 10.10.1.2)

Enclosures shall be sized to allow cables to be installed and routed without infringing on required clearances from high-voltage conductors.

Subassemblies, circuits, and related equipment should be segregated to the extent possible to minimize the possibility of a fault in one device damaging another.

9.12.3 INSTRUMENTATION

Power electronics systems can involve fast pulses, high frequencies and high currents and it is common for the voltage difference between ground in one circuit and ground in another circuit to differ substantially. This difference can be hundreds or thousands of volts. Wire and cable shall be insulated to withstand these potentials. Surge arrester and capacitor protection maybe used to control these potentials. DC circuits connected to coils, solenoid valves and other inductive components should be tested for induced voltages and appropriate protection for circuits should be provided.

9.12.4 GENERAL

Test points needed for adjustment and diagnosis should be installed on the front panel or other appropriate location of power electronic systems to facilitate their use without exposure hazard to employees in the area.

Currents generated only during fault conditions or those introducing noise or data errors shall not be considered objectionable currents. However, Bonding and grounding may be altered to reduce the noise or data errors, in accordance with provisions of NEC 250.96(B). Conductors, busbars, and internal wiring should be insulated in the event objects are dropped into the equipment.

Automatic discharge devices are not a substitute for grounding devices used for personnel protection. Grounding points shall be located in the system and physically arranged to permit the attachment of adequate grounding devices for the protection of personnel working on the system.

These grounding points shall be capable of carrying the short-circuit current to which they may be subjected and applied using methods appropriate for the voltages or currents involved.

9.13 NON-IONIZING RADIATION

9.13.1 ELECTROMAGNETIC RADIATION

Human exposure to electromagnetic (EM) radiation at certain power-density levels can be hazardous. The hazards are generally regarded to be associated with the heating of biological tissue, which occurs when EM radiation is absorbed by a body. This heating is essentially similar to the cooking process in a microwave oven. Use caution where EM sources are being used with the shielding altered or removed.

When working with EM radiation, it is recommended that the emitted radiation levels be estimated by equations and measured by radiation hazard monitors.

EM radiation-safe levels have been established by the Institute of Electrical and Electronics Engineers and are documented in the IEEE standard - C95.1-1999. Also, see Section 10.8.4.

Exposure to hazardous levels of EM radiation can be lessened by maintaining as much distance as possible from the source. Power density is reduced by a factor the square of the distance from the source (e,g., a factor of 4 for 2 times the distance).

9.13.2 ELECTROMAGNETIC RADIATION THREAT TO ELECTROEXPLOSIVE DEVICES

Designers of enclosed electrical/electronic equipment must consider the possible effects on nearby electroexplosive devices (EED) of electromagnetic radiation (EMR), i.e., radio frequency (RF) energy, emitted by that equipment.

Energy induced into an EED by the electromagnetic field resulting from such emissions may be adequate to cause the device to initiate detonation.

Factors which should be taken into account in assessing concerns for possible EMR emissions are:

1. Wiring, shielding, and sensitivity

2. Proximity

3. Frequency of the emissions causing coupling of electrical energy

4. Power density

5. Type of emission modulation

Possible measures to mitigate the threat of EMR emissions include:

1. Enclosure and signal line shielding and grounding to prevent leakage of EMR from the equipment.

2. Designed-in physical separation or barrier which would ensure that the power density of the electromagnetic field is inadequate to cause detonation of an EED at the closest possible distance to the emission source within the equipment.

3. Filter, or provide ferrite beads for, signal lines from the equipment which may conduct EMR emissions into EED circuitry or secondarily radiate EMR in the proximity of an EED thus causing a threat of detonation.

4. Ensure that the minimal power necessary is used to operate circuitry capable of producing EMR.

5. Label the equipment capable of emitting EMR to indicate the minimum separation distance to be maintained between the equipment and an EED(s).

6. Use a safety factor in design for EMR reduction, e.g., only 1/10 of the energy that would initiate EED is allowed.

10.0 RESEARCH & DEVELOPMENT

The DOE complex engages in a variety of Research & Development (R&D) activities that often incorporate the design and use of special or unusual apparatus and equipment in its facilities.

10.1 PURPOSE

Requirements of existing electrical codes, recognized industry standards, and DOE Orders do not specifically address these types of apparatus. Even with these specialized R&D needs, the workplace must be maintained free of known hazards that cause, or are likely to cause, death or serious injury. Special efforts must therefore be made to ensure adequate electrical safety beginning with design and continuing through development, fabrication and construction, modification, installation, inspection, testing, operation, and maintenance of R&D electrical apparatus and facilities. This section provides guidelines to complement existing electrical codes and recognized industry standards in conformance with DOE Orders and OSHA requirements.

Because of the differences in R&D program requirements in the DOE complex and the unpredictability of R&D activities, it is impractical to establish a single set of electrical safety requirements to be applied uniformly. General electrical safety guidelines, however, apply across the DOE complex.

This section contains safety criteria for the DOE complex in the design, development, fabrication and construction, modification, installation, inspection, testing, operation, and maintenance of R&D electrical apparatus and facilities. Personnel safety shall be the primary consideration. When conflicts between electrical codes, recognized industry standards, DOE Orders, or regulations arise, the requirement that addresses the particular hazard and provides the greater personnel safety protection shall govern.

10.2 SCOPE

This section addresses R&D electrical systems which are not specifically addressed elsewhere in the *Electrical Safety Handbook.* The electrical environment of the DOE complex is extremely varied, ranging from low-voltage electronic circuits to common office and industrial electrical systems to large, high-voltage power distribution systems to high-voltage/low-current and low-voltage/highcurrent systems associated with R&D programs. Electrical systems of all types are an integral part of R&D operations and associated support work.

10.3 COMPLIANCE WITH OSHA

It is important to note that special types of work on R&D electrical systems (e.g., electronic circuits) are considered electrical work, and therefore the work shall follow electrical safety requirements.

Consistent with other sections of this document, electrical systems and equipment and all design, development, fabrication and construction, modification, installation, inspection, testing, operation, and maintenance shall be in accordance with applicable electrical requirements. Specific attention shall be focused on the electrical regulations of OSHA, including:

1. 29 CFR 1910.137

2. 29 CFR 1910.147

3. 29 CFR 1910.269

4. 29 CFR 1910.301-399

5. 29 CFR 1926.401-449.

10.4 STANDARDIZED SAFETY PRACTICES AND PROCEDURES

Standardized safety practices shall be developed for performing electrical work. These practices should be consistent with the other electrical safety-related work practices noted elsewhere in this document.

10.5 EQUIPMENT NOT LISTED BY A NATIONALLY RECOGNIZED TESTING LABORATORY

10.5.1 HAZARDS

Electrical equipment is considered to be acceptable either by being listed by a Nationally Recognized Testing Laboratory (NRTL), designed, manufactured and tested according to nationally recognized standards, or approved by AHJ-determined criteria. Refer to Section 2.5, "Approval of Electrical Equipment."

Procurement and use of equipment not listed by an NRTL should be reviewed by the AHJ. The extensive testing involved in the listing process usually cannot be duplicated at the user facility, and many of the tests are destructive in nature. The AHJ should develop an examination acceptance process to ensure appropriate confidence in the safety of the product.

See Section 9.0, "Enclosed Electrical/Electronic Equipment," for additional guidance. Also see UL 508 and applicable ANSI and IEEE documents.

10.5.2 DESIGN AND CONSTRUCTION

Equipment should be constructed such that:

1. There is adequate protection from fire, electric shock, or injury to personnel during normal use or servicing.

2. Normal use or servicing will not cause the components or materials to exceed electrical, mechanical, or temperature limits.

3. The components, wiring, and other internal parts are protected from being displaced or damaged.

NRTL-listed parts and UL-recognized components should be used wherever possible. An assembly of recognized components is not equal to a listed product, but more readily enables an independent evaluation of the assembly.

All equipment not listed by a NRTL should be constructed according to applicable standards, such as UL, ISA, ANSI, and IEEE. Equipment for which specific standards are unavailable should be constructed according to the principles of established standards, as determined by the AHJ.

Equipment should be examined for safety as extensively as possible. Areas of consideration include but are not limited to:

1. Failure modes
2. Heat effects
3. Magnetic effects
4. Grounding and bonding
5. Guarding of live parts
6. Leakage currents
7. Dielectric testing
8. Access to serviceable parts
9. Overcurrent and overtemperature protection
10. Clearances and spacing
11. Interlocks
12. Design and procedural documentation
13. Signage, labels, and administrative controls
14. Mechanical motion
15. Stored energy.

Documentation should be developed to substantiate the acceptance of any equipment. Such documentation should include but not be limited to:

1. Tests performed
2. Conditions of acceptability
3. Applicable standards to which the equipment was evaluated
4. Limitations of approved use, if any.

10.6 OPERATION AND MAINTENANCE

Maintenance procedures and schedules should be developed for R&D equipment. Electrical equipment shall be checked, cleaned, and maintained on a schedule and in a manner based on its application and use. Additional information is referenced in Section 3.0 "Electrical Preventive Maintenance."

10.7 EMPLOYEE QUALIFICATIONS

This section provides guidance for determining the qualification process for persons involved with specialized electrical equipment, configurations or work tasks associated with experiments. The guidance provided in this section is in addition to the minimum qualifications described in Section 2.8, "Training and Qualifications of Qualified Workers."

10.7.1 HAZARDS

The hazards associated with R&D equipment are sometimes unique because the equipment itself is unique. These hazards are sometimes made worse because of an uncommon design or the fact that it may be one of a kind. Special efforts are thus necessary to identify all the potential hazards that may be present in a specific unique design. These hazards should be identified and a plan developed to mitigate the associated risk. Personnel working on R&D equipment shall be qualified to work on this equipment, depending on its unique safety problems.

10.7.2 ADDITIONAL QUALIFICATIONS

Personnel assigned to tasks involving R&D equipment shall be apprised of the hazards identified in Section 10.7.1. It is suggested that they participate in developing mitigation plans to reduce the risks associated with the hazards.

A list of additional experience qualifications should be developed by the appropriate personnel including the worker(s). This list should identify specific training requirements necessary for unusual equipment or tasks.

10.8 GENERIC R&D EQUIPMENT

There are many possible types of electrical ac and dc power source hazards in complex R&D systems and the various design philosophies preclude establishing hazard classifications based on voltage alone.

10.8.1 POWER SOURCES

10.8.1.1 HAZARDS

1. Internal component failure can cause excessive voltages. Internal component open-circuit failure in capacitor banks and Marx generators can result in full voltages across components that may not be appropriately discharged in the usual manner.

2. Internal component shorts in capacitor banks and Marx generators can result in excessive fault current, causing extreme heat, overpressurization of capacitor enclosures, and rupture.

3. Overloading or improper cooling of power supplies can cause excessive temperature rise.

4. Output circuits and components can remain energized after input power is interrupted.

5. Auxiliary and control power circuits can remain energized after the main power circuit is interrupted.

6. When power supplies serve more than one experiment, errors made when switching between experiments may create hazards to personnel.

7. R&D electrical apparatus may contain large amounts of stored energy, requiring fault analysis.

8. Liquid coolant leaking from R&D electrical equipment may pose an electrical hazard to personnel.

10.8.1.2 DESIGN AND CONSTRUCTION

In design and construction of R&D equipment, it is important to remember the following cautions:

1. Install only components essential to the power supply within the power-supply enclosure.

2. Provide appropriate separation between high-voltage components and low-voltage supply and/or control circuits.

3. Provide to personnel a visible indicator that the power supply is energized.

4. Minimize the number of control stations and provide an emergency shutdown switch where needed.

5. Where possible, avoid multiple-input power sources.

6. Apply a label containing emergency shutdown instructions to equipment that is remotely controlled or unattended while energized.

10.8.1.3 OPERATION AND MAINTENANCE

Before working in a power-supply enclosure or an associated equipment enclosure, see Sections 2 and 7. Personnel should take the following precautions:

1. Implement lockout/tagout.

2. Check for auxiliary power circuits that could still be energized.

3. Inspect automatic shorting devices to verify proper operation.

4. Short the power supply from terminal to terminal and terminal to ground with grounding hooks.

10.8.2 CONDITIONS OF LOW VOLTAGE AND HIGH CURRENT

10.8.2.1 HAZARDS

It is usual for R&D facilities to have equipment that operates at less than 50 V. Although this equipment is generally regarded as nonhazardous, it is considered hazardous when high currents are involved. Examples of such equipment are a power supply rated 3 kA at 25 V, a magnet power supply with rated output of 200 A at 40 V, and a bus bar carrying 1 kA at 5 V.

Though there is a low probability of electric shock at voltages less than 50 V (See Figure 10-1), there is a hazard due to arcing and heating in case of an accidental fault. For example, a tool could drop onto the terminals and initiate an arc, causing severe burns.

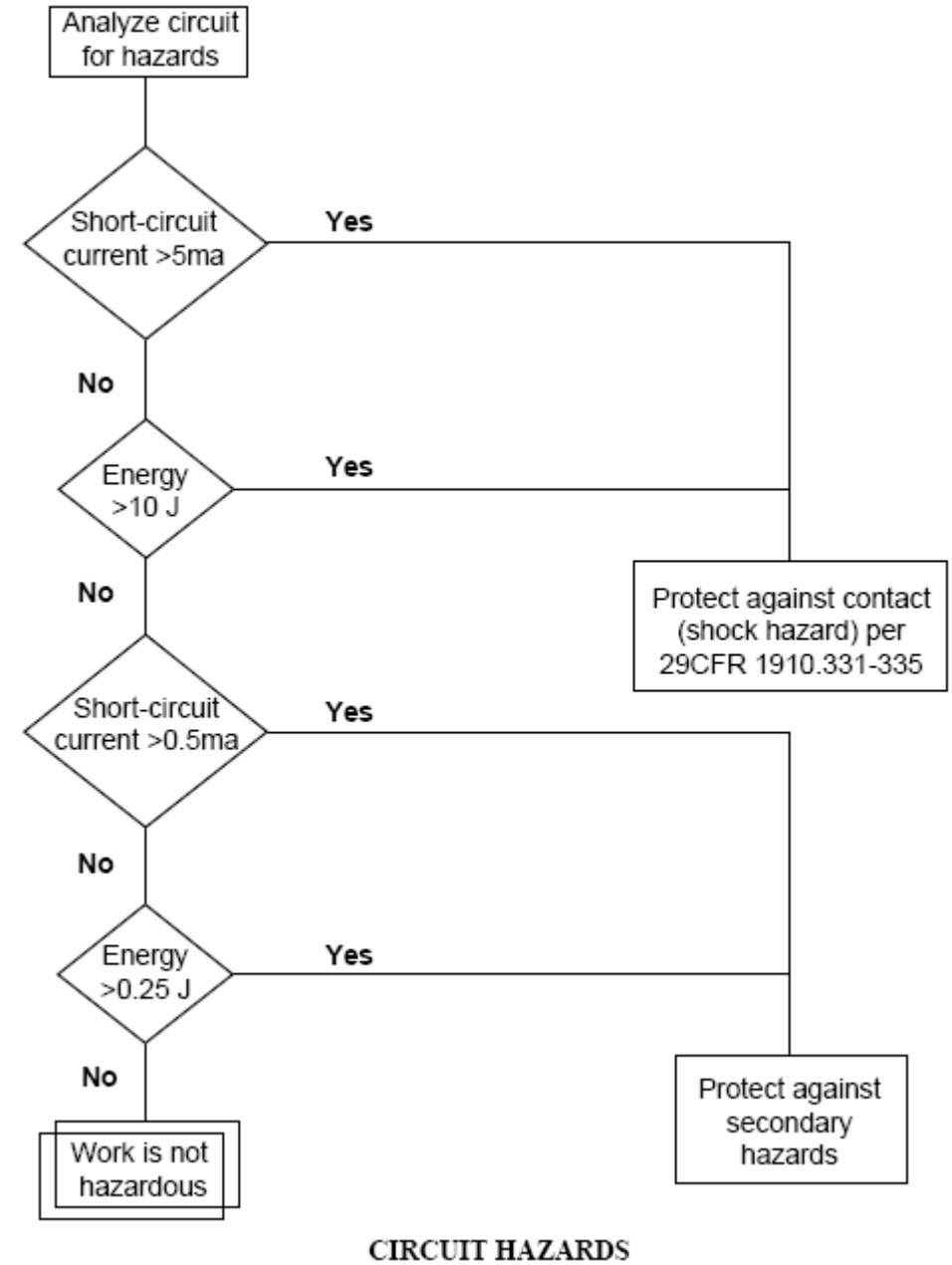

Figure 10-1. Process for the analysis of circuit hazards.

10.8.2.2 DESIGN AND CONSTRUCTION

A circuit operating at 50 V or less shall be treated as a hazardous circuit if the power in it can create electrical shocks, burns, or an explosion due to electric arcs. Inductive circuits may create high-voltage hazards when interrupted. Observe all of the following rules for such circuits:

1. Provide protective covers and/or barriers over terminals and other live parts to protect personnel.

2. By suitable marking, identify the hazard at the power source and at appropriate places.

3. Consider magnetic forces in both normal-operation and short-circuit conditions. Use conductors that have appropriate physical strength and are adequately braced and supported to prevent hazardous movement.

10.8.2.3 OPERATION AND MAINTENANCE

Follow these guidelines for working on circuits operating at 50 V or less that are treated as hazardous:

1. Work on such circuits when they are de-energized.

2. If it is essential to work on or near energized low-voltage, high-current circuits, observe the safety rules as if the circuits were operating at more than 50 V. Refer to Section 2.1.2, "Considerations for Working on Energized Systems and Equipment" and 2.13.4, "Safe Energized Work (Hot Work)."

10.8.3 CONDITIONS OF HIGH VOLTAGE AND LOW CURRENT

10.8.3.1 HAZARDS

When the output current of high-voltage supplies is below 5 mA, the shock hazard to personnel is low. Where combustible atmospheres or mixtures exists, the hazard of ignition from a spark may exist. High-voltage supplies (ac or dc) can present the following hazards:

1. Faults, lightning, or switching transients can cause voltage surges in excess of the normal ratings.

2. Internal component failure can cause excessive voltages on external metering circuits and low-voltage auxiliary control circuits.

3. Overcurrent protective devices such as fuses and circuit breakers for conventional applications may not adequately limit or interrupt the total inductive energy and fault currents in highly inductive do systems.

4. Stored energy in long cable runs can be an unexpected hazard. Safety instructions should be in place to ensure proper discharge of this energy.

5. Secondary hazards such as startle or involuntary reactions from contact with high-voltage low-current systems may result in a fall or entanglement with equipment.

10.8.3.2 DESIGN CONSIDERATIONS

Personnel in R&D labs may encounter energized parts in a variety of configurations, locations, and under environmental conditions that are not usual for most electrical power personnel. Sometimes the equipment can be designed to incorporate mitigation of the hazards associated with working on such equipment. If not, then safe operating procedures must be developed and used.

10.8.3.3 SAFETY PRACTICES

An analysis of high-voltage circuits should be performed by a qualified person before work begins unless all exposed energized parts are guarded as required for high-voltage work. The analysis must include fault conditions where circuit current could rise above the nominal rated value as explained here and shown graphically in Figure 10-1. Depending on the results of the analysis, any of the following may apply:

1. If the analysis concludes that the current is above 5 mA or energy is above 10 J, then the work is considered to be energized work and should be performed in accordance with Section 2, "General Requirements" and/or Section 7, "Work In Excess of 600 Volts."

2. If the analysis concludes that the current is between 0.5 mA and 5 mA and between 0.25 and 10 J, then the worker may be exposed to a secondary hazard (e.g., startle reaction) that must be mitigated.

3. If the analysis concludes that the current is below 0.5 mA and below 0.25 J, then the worker exposure is minimal and no special precautions are required.

High-voltage supplies that use rated connectors and cables where there are no exposed energized parts are not considered hazards. Connections shall not be made or broken with the power supply energized unless they are designed and rated for this type of duty (e.g., load-break elbows). Inspect cables and connectors for damage and do not use if they are damaged. Exposed high-voltage parts must be guarded to avoid accidental contact.

10.8.4 RADIO-FREQUENCY/ MICROWAVE RADIATION AND FIELDS

The DOE complex conducts R&D programs that involve sources of radio-frequency/microwave (RFMW) nonionizing electromagnetic radiation. Devices that may produce RFMW radiation include telecommunications and radar equipment, industrial equipment such as radio-frequency heaters, and scientific and medical equipment such as magnetic resonance imagers and klystron tubes. The nationally recognized consensus standard for personnel exposure to radio-frequency radiation is ANSI/IEEE C95.1(1999), "Electromagnetic Fields, Safety Levels with Respect to Human Exposure to Radio Frequency."

10.8.4.1 HAZARDS

1. RF amplifiers frequently use dc high-voltage power sources.

2. There may be x-ray hazards (when supply voltage exceeds 10 kV and there are evacuated components).

3. Currents maybe induced in conductive objects or metal structures that are not part of the RF structure.

4. RF currents can cause severe burns.

5. Falls from towers may result from RF burns from antennas.

6. Electromagnetic interference may cause equipment to malfunction.

7. Electromagnetic fields may cause unintended ignition of explosives, fuel, and ordnance.

8. Grounding and bonding conductors that are adequate for dc and power frequencies may develop substantial voltage when fast pulses and radio frequency currents are present, due to inductance and skin effect.

10.8.4.2 DESIGN AND CONSTRUCTION

Engineering control in accordance with ANS/IEEE C95.1 (1999) should be the primary method used to restrict exposure whenever practical. If engineering controls are not practical, work-time limits, based on the averaging intervals and other work-practice and administrative controls, must be used.

1. Warning Signs. Signs commensurate with the RFMW level must be used to warn personnel of RFMW hazards. These signs must be posted on access panels of RFMW enclosures and at entrances to and inside regulated areas.

2. Access Limitation. Access can be limited by controls such as barriers, interlocks, administrative controls or other means. The operation supervisor controls access to regulated areas and must approve nonroutine entry of personnel into these places. When practical, sources of RFMW radiation should be switched off when not in use.

3. Shielding. Shielding that encloses the radiating equipment or provides a barrier between the equipment and the worker may be used to protect personnel; the shielding design must account for the frequency and strength of the field.

4. Interlocks. Chamber or oven-type equipment that uses microwave radiation must have interlocks designed to (1) prevent generation of the radiation unless the chamber is sealed and (2) shut off such equipment if the door is opened.

5. Lockout/Tagout. The design shall incorporate features that allow the equipment to be locked out and tagged out for servicing.

6. Personnel Protective Equipment (PPE). PPE such as eyewear is not readily available and is generally not a useful option as protection against RFMW radiation and fields. Protection must therefore be achieved by other means.

10.8.4.2.1 EXEMPTIONS TO RFMW EXPOSURE LIMITS

The following items are exempt from the RFMW exposure limits; however, their manufacture is subject to Federal RFMW emission standards:

1. Cellular phones and two way pagers and PDAs

2. Two-way, hand-held radios and walkie-talkies that broadcast between 10 kHz and 1 GHz and emit less than 7 W

3. Microwave ovens used for heating food

4. Video display terminals.

10.8.4.2.2 EXPOSURE CRITERIA FOR PULSED RFMW RADIATION

The basic considerations for peak-power exposure limits are consistent with ANSI/IEEE C95.1 (1999) as follows:

1. For more than five pulses in the averaging time and for pulse durations exceeding 100 milliseconds, normal time averaging applies and the time-averaged power densities should not exceed the Maximum Permissible Exposure (MPE) given in Table 10-1 for controlled and Table 10-2 for uncontrolled environments, per IEEE/ANSI C95.1 (1999).

2. For intermittent pulse sources with no more than five pulses during the averaging time, the peak power density for any of the pulses should not exceed the limit given by the following equation.

$$MPE_p = \frac{MPE_\alpha (t_\alpha)}{5(t_p)}$$

where:

MPE_p = Peak (power density)
MPE_α = Time-Average (power density)
t_α = Averaging time (seconds)
t_p = Pulse width (seconds)

This limits the specific absorption (SA) of each pulse to SA=28.8 J/kg (whole-body or spatial average), or SA=144 J/kg for 5 pulses.

For intermittent pulse sources with no more than five pulses during the averaging time, the single-pulse SA of < 28.8 J/kg, though higher than the threshold for auditory effect (clicking), is three orders of magnitude lower than the SAs that produce RF-induced unconsciousness.

3. Maximum E field for any of the pulses should be no more than 100 kV/m. This peak E-field limit is prescribed to eliminate the possibility of air breakdown or spark discharges, which occur at 2,900 V/m. A large safety factor is applied to account for local field enhancements where nominally lower fields may result in arcing discharges.

10.9 METHODS

10.9.1 WIRING METHODS

10.9.1.1 HAZARDS

Unsafe wiring methods can cause electrical injury or fire hazards.

R&D work may require the use of wiring methods that are not anticipated in the NEC. These methods may not be consistent with normal commercial and industrial wiring methods, and should be reviewed by the AHJ for approval.

Table 10-1. Controlled Environment Exposure Limits

Part A Electromagnetic Fields[a]

1 Frequency range (MHz)	2 Electric Field strength (E) (v/m)	3 Magnetic Field strength (H) (A/m)	4 Power density (S) E-field, H-field (mW/cm^2)	5 Averaging time $\|E\|^2$, $\|H\|^2$, or S (minutes)
0.003-0.1	61.4	163	(100, 1,000,000)[b]	6
0.1-3.0	61.4	$16.3/f$[c]	$(100, 10{,}000/f^2)$[b]	6
3-30	$1842/f$	$16.3/f$	$(180/f^2, 10{,}000/f^2)$[b]	6
30-100	61.4	$16.3/f$	$(180/f^2, 10{,}000/f^2)$[b]	6
100-300	61.4	0.163	1.0	6
300-3,000	—	—	$f/300$	6
3,000-15,000	—	—	10	6
15,000-300,000	—	—	10	$616{,}000\ f^{1.2}$

Part B Introduced and contact RF Currents[d]

Frequency range	Maximum current (mA)		Contact
	Through both feet	Through each foot	
0.003-0.1 MHz	$2{,}000\ f$	$1{,}000\ f$	$1{,}000\ f$
0.1-100 MHz	200	100	100

a. The exposure values in terms of electric and magnetic field strength are the values obtained by spatially averaging values over an area equivalent to the vertical cross section of the human body (projected area).

b. These plane-wave equivalent power density values, although not appropriate for near-field conditions, are commonly used as a convenient comparison with MPEs at higher frequencies and are displayed on some instruments in use.

c. The f = frequency in MHz.

d. It should be noted that the current limits given in this table may not adequately protect against startle reactions and burns caused by transient discharges when contacting an energized object.

NEC Article 527 "Temporary Installations," requires removal of temporary wiring upon completion of the experiment for which it was installed.

An overly strict interpretation can obstruct the scientific objectives of the R&D configuration, but if a liberal interpretation is allowed, there is a possibility that unsafe wiring methods will be used. The AHJ must consider programmatic needs without sacrificing personnel safety.

Table 10-2. Uncontrolled Environment Exposure Limits

Part A Electromagnetic Fields[a]

1 Frequency range (MHz)	2 Electric Field strength (E) (v/m)	3 Magnetic Field strength (H) (A/m)	4 Power density (S) E-field, H-field (mW/cm^2)	$\|E\|^2$,	5 Averaging Time (minutes) S	$\|H\|^2$
0.003-0.1	61.4	163	(100, 1,000,000)[b]	6 6		
0.1-1.34	61.4	$16.3/f$[c]	$(100, 10{,}000/f^2)$[b]	6 6		
1.34-3.0	$823.8/f$	$16.3/f$	$(180/f^2, 10{,}000/f^2)$[b]	$f^2/0.3$		6
3.0-30	$823.8/f$	$16.3/f$	$(180/f^2, 10{,}000/f^2)$[b]	30		6
30-100	27.5	$158.3/f^{1.668}$	$(0.2{,}940{,}000/f^{6.336})$[b]	30	$0.0636f$	1.337
100-300	27.5	0.0729	0.2	30		30
300-3,000	—	—	$f/1{,}500$	30		—
3,000-15,000	—	—	$f/1{,}500$	$90{,}000/f$		—
15,000-300,000	—	—	10	$616{,}000/f^{1.2}$		—

Part B Introduced and contact RF Currents[d]

Frequency range	Maximum current (mA)		Contact
	Through both feet	Through each foot	
0.003-0.1 MHz	$900\ f$	$450\ f$	$450\ f$
0.1-100 MHz	90	45	45

a. The exposure values in terms of electric and magnetic field strength are the values obtained by spatially averaging values over an area equivalent to the vertical cross section of the human body (projected area).

b. These plane-wave equivalent power density values, although not appropriate for near-field conditions, are commonly used as a convenient comparison with MPEs at higher frequencies and are displayed on some instruments in use.

c. The f = frequency in MHz.

d. It should be noted that the current limits given in this table may not adequately protect against startle reactions and burns caused by transient discharges when contacting an energized object.

10.9.1.2 DESIGN AND CONSTRUCTION

10.9.1.2.1 DESIGN AND CONSTRUCTION AS AN INTEGRAL PART OF EQUIPMENT

If the AHJ determines that wiring is an integral part of an apparatus (e.g., instrumentation interconnections), then the wiring methods used should be evaluated by the AHJ as providing safe operating conditions. This evaluation may be based on a combination of standards and engineering documentation where appropriate. Such an evaluation should consist of an analysis of all stresses imposed on any electrical conductive elements, including, but not limited to electrical, magnetic, heating, and physical damage potential. The wiring methods selected must mitigate to the greatest practical extent any undesired effects of a failure sequence.

If cable trays are used as mechanical support for experimental circuits, they should be solely dedicated to this use and appropriately labeled. Any such use must be analyzed for detrimental heating effects of the proposed configuration.

10.9.1.2.2 POWER SUPPLY INTERFACE BETWEEN UTILITY SYSTEMS AND R&D EQUIPMENT

Utility supply voltages should be brought as near to the utilization equipment as possible using NEC-compliant wiring methods.

Any temporary wiring methods used (e.g., extension cords) should be approved by the AHJ for a specified limited time.

Flexible cords and cables should be routed in a manner to minimize tripping hazards.

The conventional use of cable trays is defined in NEC Article 392. If power cables are placed in a cable tray used for control and signal cables, separation is advised but not always required. According to NEC Article 392.6(E), multiconductor cables rated at 600 volts or less are permitted to be installed in the same cable tray. This presumes the cables are listed, having a minimum rating of 300 volts. However, cables rated over 600 volts require separation from those rated at 600 volts or less, per Article 392.6(F). Communications cables are required to be separated from light or power conductors by at least 2 inches, in accordance with NEC Article 800.52(A)(2).

Certain experimental configurations or physical constraints may require the unconventional application of cable trays. Only the AHJ may approve these unconventional applications. If deemed necessary, enhanced fire protection or other safety measures shall be used to ensure safety to personnel and equipment.

For coaxial, heliax and specialty cables used for experimental R&D equipment, where NEC tray-rated cable types are not available which meet the technical requirements of the installation, the non-tray-rated cables shall be permitted with the approval of the AHJ. If deemed necessary, enhanced fire protection or other safety measures shall be used to ensure safety to personnel and equipment.

When metallic cable tray is being used, it shall be bonded to the equipment grounding system, but should not be relied upon to provide the equipment ground. The experimental equipment must be appropriately grounded by some other method.

10.9.1.3 OPERATION AND MAINTENANCE

The operation and maintenance of R&D systems which use wiring methods that are not anticipated by the NEC require special considerations from all personnel. The AHJ evaluation for safe operating conditions must include a review of unique features in the engineering documentation.

10.9.2 UNCONVENTIONAL PRACTICES

R&D performed by DOE contractors often incorporates the design of specialized equipment resulting in the need for specialized grounding and the use of materials and components in an unconventional manner. Even with these experimental needs and special design considerations, the maximum safety of personnel and equipment still needs to be ensured. The practice of using materials or components for purposes other than originally designed needs special consideration in their use, identification, personnel protection, and equipment protection.

10.9.2.1 GROUNDING

10.9.2.1.1 HAZARDS

The lack of proper grounding can cause electrical shock and/or burns to personnel. The NEC and NESC define legally-required grounding. To mitigate potential hazards, grounding shall be provided in accordance with the NEC and NESC.

10.9.2.1.2 DESIGN AND CONSTRUCTION

NEC, Article 250, "Grounding" notes that grounds also provide:

1. Voltage limitation in case of lightning, line surges, or unintentional contact with higher voltage lines

2. Stability of voltage to ground under normal operation

3. Facilitated overcurrent device operation in case of ground faults

4. A path to conductive objects that will limit the voltage to ground.

In R&D work there is one additional function for grounds: a common reference plane or system ground return for electronic devices, circuits, and systems. (See Section 9.3) It is recognized that such grounds are essential in some cases to control:

1. Noise associated with the primary power system:

a. Incoming on the line

b. Outgoing from local equipment

2. Ground wire noise

3. Circuit coupling

a. Ground loop (shared circuit return)

b. Magnetic, capacitive, or electro-magnetic.

If system return impedances are low enough, then simple radio-frequency chokes can be used to limit this noise with no effect on the safety function.

A 50-microhenry choke will add 1/50 of an ohm at 60 Hz, but will look like 2 ohms at 7.5 kHz and 30 ohms at 100 kHz. Such an RF choke will serve to discriminate against noise on the ground circuit.

An inexpensive RF choke may be installed in the safety ground by:

1. Pulling the green ground wire 20 feet longer than required.

2. Coiling the extra length on a 6-inch diameter (about 12 turns).

3. Securing it tightly wound with cable ties.

4. Connecting it into the circuit.

These actions satisfy the NEC requirement for a continuous ground and noise isolation is also enhanced.

Whatever scheme is used, the ground of experimental equipment shall be connected to the same ground as the facilities' electrical system to ensure equal potential.

For practices involving hazardous materials, such as explosives, the grounding shall also comply with the requirements of Section 5.0, "Special Occupancies".

10.9.2.1.3 NOISE COUPLING MECHANISMS.

Grounding can reduce the interference in the five types of coupling mechanisms listed here.

1. Conductive Coupling. (Source and load wired together) It is sometimes practical to provide a separate return path for both the source and the load. If the system layout allows this, then conductive coupling cannot occur between these two, as is shown in Figures 10-2 and 10-3.

2. Capacitive Coupling. (High-impedance proximity coupling) The technique for increasing resistance to capacitive coupling among cables is to ground one end of the shield to produce the shortest, most direct shunt path back to the source of the coupled current as is shown in Figures 10-4 and 10-5.

   Caution: It is possible to inadvertently INCREASE coupling between source and load if the shield ground does not properly shunt the current coupled onto the shield.

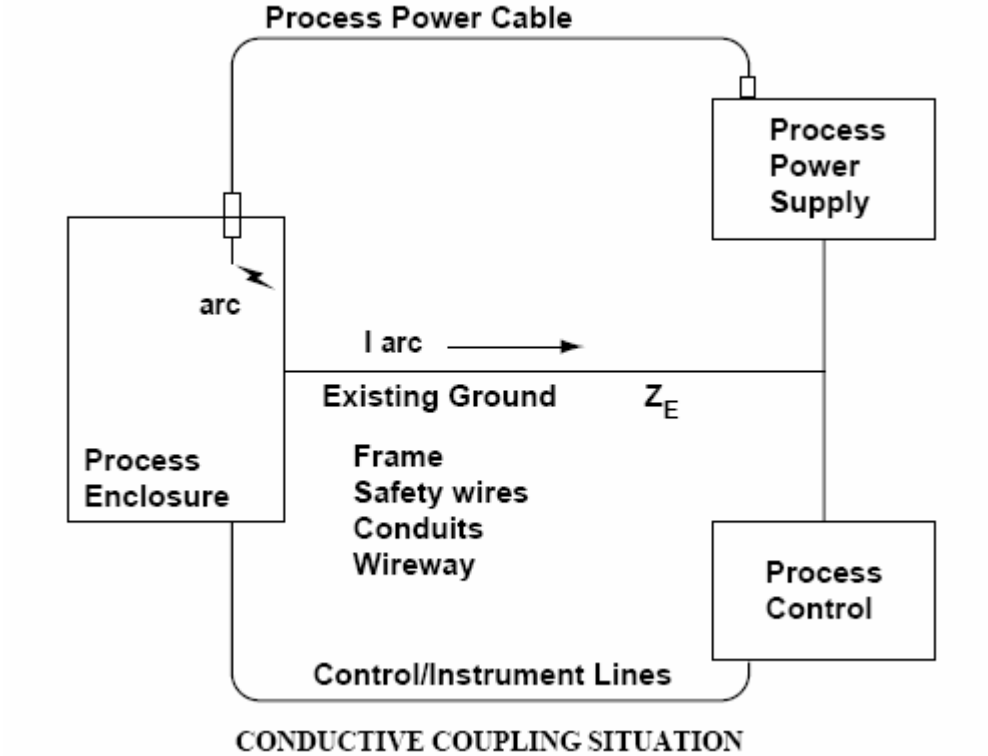

Figure 10-2. Arc currents through the process power supply return (existing ground) develop a voltage that appears in series with the process controls because they share that return.

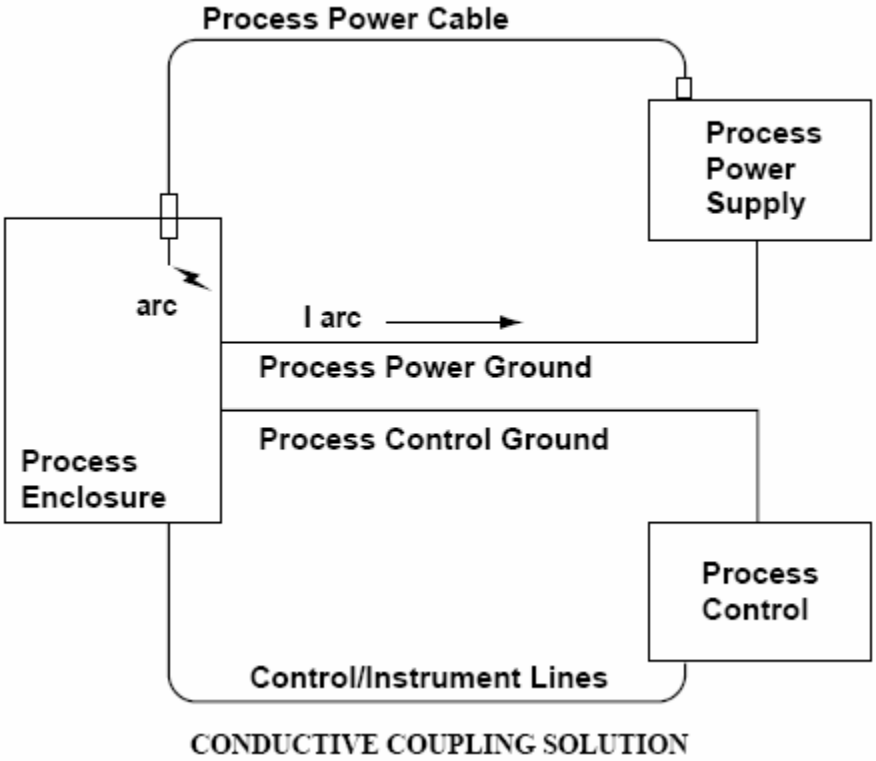

Figure 10-3. It has been possible to install a separate return conductor for the power supply. The arc currents no longer appear in series with the process controls. There is no conductive coupling.

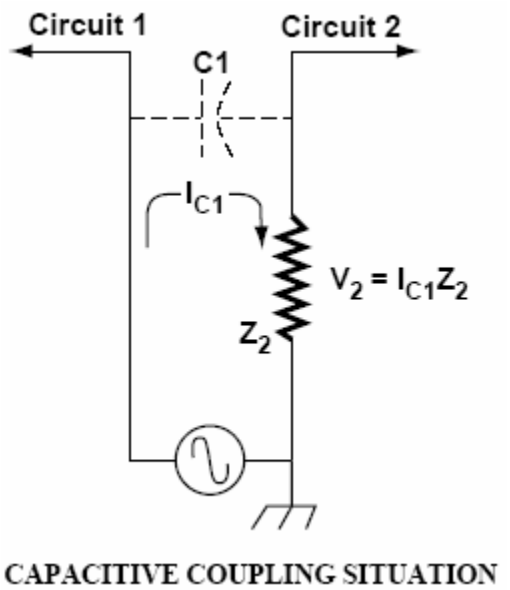

Figure 10-4. Capacitance between circuit 1 and circuit 2 is allowing current to be transferred into circuit 2 via an electric field. This current flows through Z_2, the impedance of circuit 2, and develops an interfering voltage.

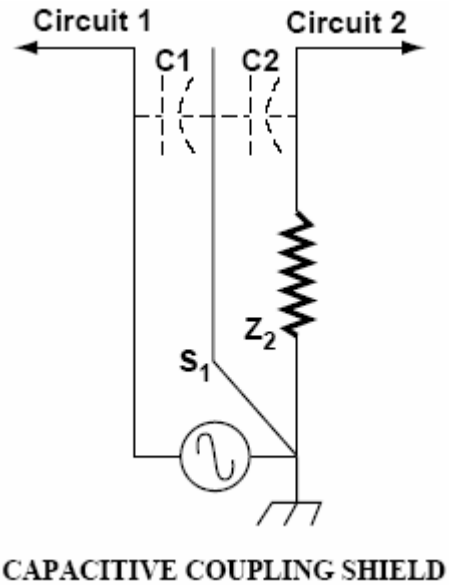

Figure 10-5. A shield has been interposed between circuit 1 and circuit 2. The coupling will be reduced as it shunts the coupled current around Z_2 instead of through it. The interfering voltage could be increased instead of decreased if not properly shunted.

3. Inductive Coupling. (Near-field, low-impedance loop-to-loop coupling) The technique for increasing resistance to magnetic coupling in shielded cables is to ground BOTH ends of the shield to an effective signal return ground as is shown in Figures 10-6 and 10-7.

4. System Signal Returns. Each installation will require individual analysis and treatment. A single ground poses no problem, but multiple grounds can result in a ground loop. These can upset the proper functioning of instruments. A signal isolator offers a way of overcoming the problem.

5. Instrumentation Grounding[2]. Equipment that is used to implement a control instrumentation strategy (see Figure 10-8) makes use of a common signal ground as a reference for analog signals. Any additional grounds that are introduced into the control circuit will almost certainly cause ground loops to occur.

A typical process instrumentation loop is shown in Figure 10-8. It is a DC system that operates at a specific voltage (24 volts in this case) to a master ground reference called a signal ground. The instrumentation signal varies within the range of 4-20 mA, depending upon the value of the variable (pressure, temperature, etc.) seen by the sensor. A precisely calibrated circuit takes

[2] The information in this section and figures 10-8 and 10-9 are reprinted with permission from the September 1991 issue of EC&M magazine copyright (c) 1991 Intertec Publishing Corporation. All rights reserved.

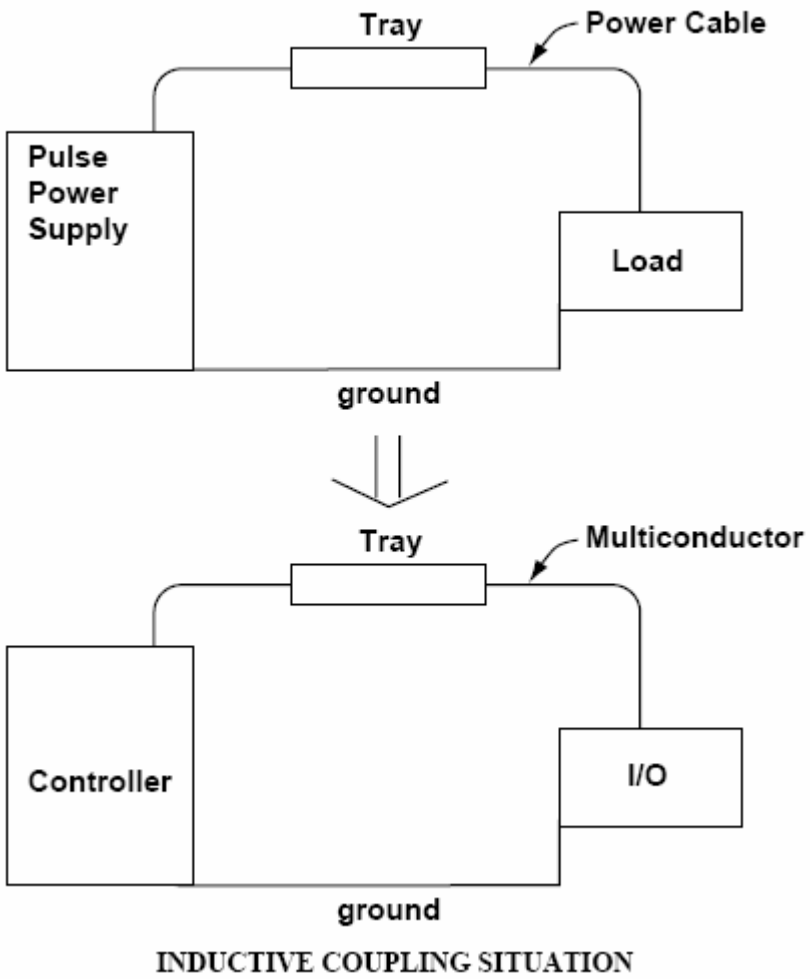

Figure 10-6. The pulse power supply, its cable, load, and return form a transmitting loop which couples into the loop formed by the controller, its multiconductor cabling, 1/0 and return. Note that in actual installations these loops can be very large and very close.

this mA signal and converts it into a form that can be used by a process-control computer, PLC, dedicated instrument, or whatever controller that supervises the system. In this example, the mA signal is converted to a 1-5 V signal for a chart recorder. At 4 mA, the voltage measured by the recorder is 250 x.004 = 1 V. At 20 mA, the measured voltage is 5 V. Normally, the recorder scale is calibrated so the voltage reads directly in °F, psi, etc.

In order to minimize the danger of introducing ground loops into this complicated network of sensitive equipment, a dedicated instrumentation system ground bus is usually employed. This bus ultimately receives grounds from the signal common, the do power supply common, the cabinet ground, and the instrumentation ac power ground. The bus is tied to earth via the building ground and the plant ground grid. Figure 10-9 shows the typical way in which interconnection of these various grounds is accomplished.

The cabinet ground is a safety ground that protects equipment and personnel from accidental shock hazards while providing a direct drain line for any static charges or electromagnetic interference (EMI) that may affect the cabinets. The cabinet ground remains separate from the do signal ground until it terminates at the master ground bus.

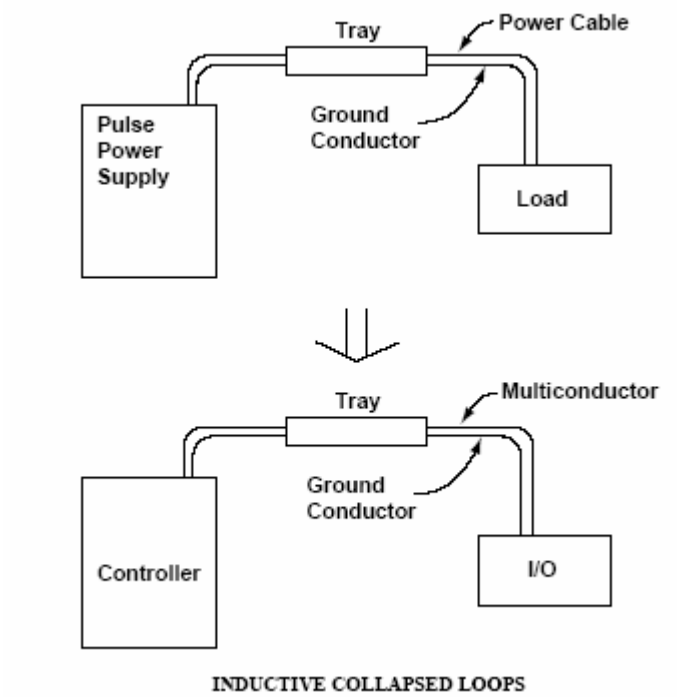

Figure 10-7. Intentional returns have been installed for both the pulse power supply and the controller right in the trays for the cables. Both loops have been reduced to small cross sections, reducing inductive coupling. Any electromagnetic (far field) radiation being generated by the pulse power supply and its cabling will also be reduced.

Eliminating grounds is not feasible for some instruments, such as thermocouples and some analyzers, because they require a ground to obtain accurate measurements. Also, some instruments must be grounded to ensure personnel safety.

When grounds cannot be eliminated, the solution to instrumentation ground loops lies in signal isolators. These devices break the galvanic path (dc continuity) between all grounds while allowing the analog signal to continue throughout the loop. An isolator also eliminates the noise of ac continuity (common-mode voltage)[3].

10.9.2.1.4 OPERATION AND MAINTENANCE

Before starting each operation (experiment, test, etc.) the exposed portions of the grounding system should be visually checked for any damage and to determine that all necessary connections have been made. If more than one operation is conducted every day, then visual checks should be performed only at the beginning of each shift, if the grounding system will be needed during that shift. The adequacy of the grounding system should be verified annually. It is recommended that the grounding impedance within the equipment be maintained at 0.25 ohms or less. (See IEEE 1100).

---

[3] Much of the information above came from the article which is titled "Causes and Cures of Instrumentation Ground Loops," by Pat Power, Moore Industries, Houston, TX.

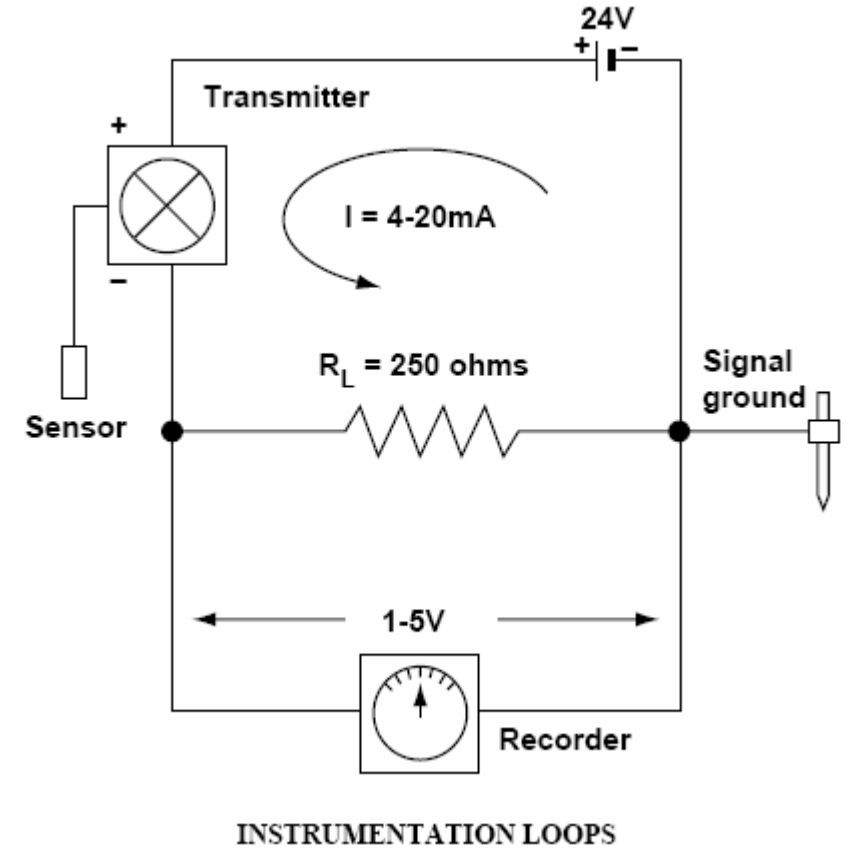

Figure 10-8. Typical Process Instrument Loop.

10.9.2.2 MATERIALS USED IN AN UNCONVENTIONAL MANNER

The practice of using materials or components for purposes other than originally designed needs special safety considerations in use, identification, personnel protection, and equipment protection.

10.9.2.2.1 HAZARDS

The use of materials for something other than their original design criteria has the potential for providing an additional hazard, especially to personnel unfamiliar with the research apparatus. Personnel may assume that the material is used as originally designed and can unknowingly expose themselves to hazards unless special precautions are followed.

Some examples of items used in an unconventional manner are:

1. Copper pipe used as an electrical conductor

2. Insulated flexible copper pipe used as an electrical conductor

3. Specially designed high-voltage or high-current connectors

4. Specially designed high-voltage or high-current switches

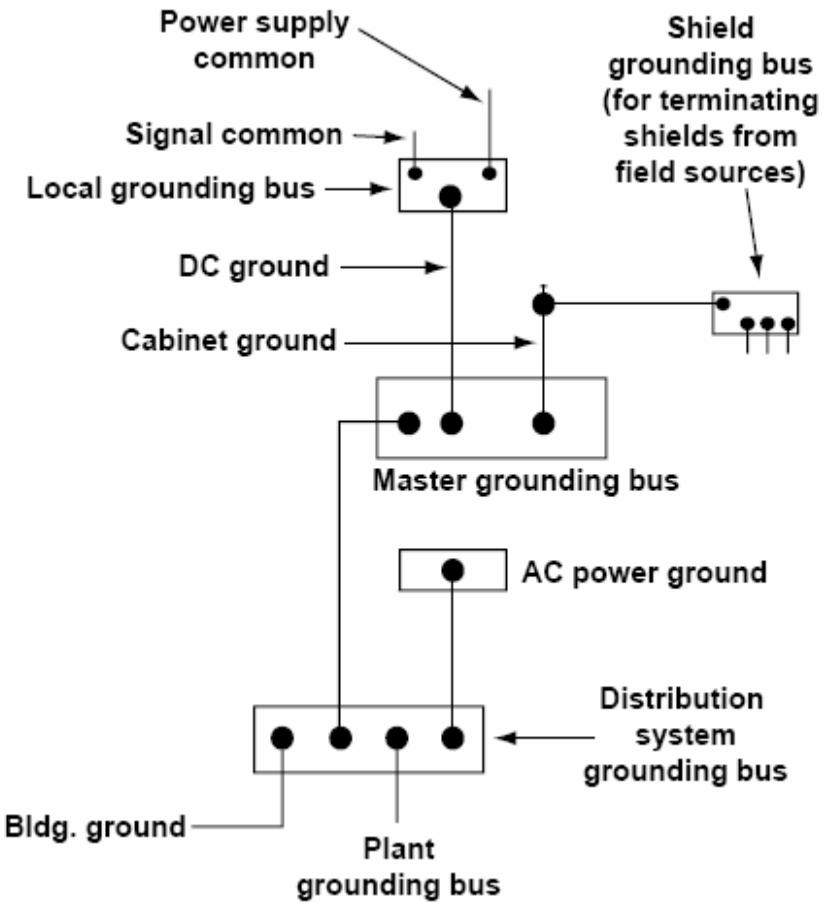

Figure 10-9. Typical control instrumentation ground system.

5. Water column used as a high-voltage resistor

6. Standard coax cable used in special high-voltage pulsed circuits

7. Water column used as a charged-particle beam attenuator

8. Commercial cable tray used as a mechanical support for experimental apparatus.

10.9.2.2.2 DESIGN AND CONSTRUCTION

During design, special consideration should be given to installing interlocks and protective barriers. Signs warning of the hazards should be posted to help prevent unsuspecting personnel from being injured.

10.9.2.2.3 OPERATION AND MAINTENANCE

Appropriate safety procedures and training should be part of the process to qualify personnel. The procedures should describe the methods used to promote safe work practices relating to work on energized circuits in accordance with Sect. 2.1.2, "Considerations for Working on Energized Systems and Equipment", Sect. 2.13, "Work Practices", and 29 CFR 1910.331-335.

10.9.3 WORK ON ENERGIZED OR DE-ENERGIZED ELECTRICAL EQUIPMENT

Unless explicitly stated otherwise in this section, all work on energized/de-energized equipment will conform to Section 2.0, "General Requirements."

10.10 REQUIREMENTS FOR SPECIFIC R&D EQUIPMENT

Electrical equipment and components used in research may pose hazards not commonly found in industrial or commercial facilities. Special precautions are required to design, operate, repair, and maintain such equipment. Electrical safety and personnel safety circuits (e.g., interlocks) are covered in this section as a guide to reduce or eliminate associated hazards. Training and experience in the specialized equipment are necessary to maintain a safe workplace.

All personnel involved with research electrical equipment should be trained and be familiar with the hazards they may encounter in the workplace. Only qualified electrical personnel should design, install, repair, or maintain electrical research equipment or components. Safety-related design, operation, and maintenance techniques should be incorporated into all new or modified equipment. Existing equipment should be modified when necessary to ensure safety. Equipment for which specific standards are not available should be constructed according to the principles of established standards, as determined by the AHJ.

Capacitors and inductors are used in research apparatus in special configurations as well as in their standard configurations. The design, operation, and maintenance of research apparatus using capacitors and inductors in these special configurations require that special consideration be given to the safety of both personnel and equipment.

10.10.1 CAPACITORS

This section covers capacitors that are used in the following typical R&D applications:

1. Energy storage
2. Voltage multipliers
3. Filters
4. Isolators

10.10.1.1 HAZARDS

Examples of capacitor hazards include:

1. Capacitors may store and accumulate a dangerous residual charge after the equipment has been de-energized. Grounding capacitors in series may transfer rather than discharge the stored energy.
2. A hazard exists when a capacitor is subjected to high currents that may cause heating and explosion.

3. When capacitors are used to store large amounts of energy, internal failure of one capacitor in a bank frequently results in explosion when all other capacitors in the bank discharge into the fault. Approximately 10^4J is the threshold energy for explosive failure of metal cans.

4. High-voltage cables should be treated as capacitors since they have the capability to store energy.

5. The liquid dielectric and combustion products of liquid dielectric in capacitors may be toxic.

6. Because of the phenomenon of "dielectric absorption," not all the charge in a capacitor is dissipated when it is short-circuited for a short time.

7. A dangerously high voltage can exist across the impedance of a few feet of grounding cable at the moment of contact with a charged capacitor.

8. Discharging a capacitor by means of a grounding hook can cause an electric arc at the point of contact. (See 10.10.1.2.3).

9. Internal faults may rupture capacitor containers. Rupture of a capacitor can create a fire hazard. Polychlorinated-biphenyl (PCB) dielectric fluids may release toxic gases when decomposed by fire or the heat of an electric arc.

10. Fuses are generally used to preclude the discharge of energy from a capacitor bank into a faulted individual capacitor. Improperly sized fuses for this application may explode.

10.10.1.2 DESIGN AND CONSTRUCTION

The following cautions in design and construction should be considered:

1. Isolate capacitor banks by elevation, barriers, or enclosures to preclude accidental contact with charged terminals, conductors, cases, or support structures.

2. Interlock the circuit breakers or switches used to connect power to capacitors.

3. Provide capacitors with current-limiting devices.

4. Design safety devices to withstand the mechanical forces caused by the large currents.

5. Provide bleeder resistors on all capacitors not having discharge devices.

6. Design the discharge-time-constant of current-limited shorting and grounding devices to be as small as practicable.

7. Provide suitable grounding.

10.10.1.2.1 AUTOMATIC DISCHARGE DEVICES

1. Use permanently connected bleeder resistors when practical.

2. Have separate bleeders when capacitors are in series.

3. Use automatic shorting devices that operate when the equipment is de-energized or when the enclosure is opened, which discharges the capacitor to safe voltage (50 V or less) in less time than is needed for personnel to gain access to the voltage terminals. It must never be longer than 5 minutes.

4. For Class C equipment with stored energy greater than 10 J, provide an automatic, mechanical discharging device that functions when normal access ports are opened.

5. Ensure that discharge devices are contained locally within protective barriers to ensure wiring integrity. They should be in plain view of the person entering the protective barrier so that the individual can verify proper functioning of the devices.

6. Provide protection against the hazard of the discharge itself.

10.10.1.2.2 SAFETY GROUNDING

1. Fully visible, manual grounding devices should be provided to render capacitors safe while work is being performed.

2. Grounding points must be clearly marked.

3. Prevent transferring charges to other capacitors.

10.10.1.2.3 GROUND HOOKS

1. Conductor terminations should be soldered or terminated in an approved crimped lug. All conductor terminations must be strain-relieved within 15 cm.

2. Ground hooks must be grounded and impedance should be less than 0.1 ohms to ground.

3. The cable conductor must be clearly visible through its insulation.

4. A cable conductor size of at least #2 AWG should be used, and the conductor shall be capable of carrying the available fault current of the system.

5. Ground hooks shall be used in sufficient number to adequately ground all designated points.

6. Permanently installed ground hooks must be permanently grounded and stored in a manner to ensure that they are used.

10.10.1.2.4 DISCHARGE EQUIPMENT WITH STORED ENERGY IN EXCESS OF 10 JOULES

1. A discharge point with an impedance capable of limiting the current to 500A or less should be provided.

2. The discharge point must be identified with a unique marker (example: yellow circular marker with a red slash), and should be labeled "HI Z PT" in large legible letters.

3. A properly installed grounding hook should first be connected to the current-limiting discharge point and then to a low-impedance discharge point (< 0.1 ohm) that is identified by a unique marker (example: yellow circular marker).

4. The grounding hooks should be left on all of these low-impedance points during the time of safe access.

5. The low-impedance points shall be provided whether or not the HI-Z current-limiting points are needed.

6. Voltage indicators that are visible from all normal entry points should be provided.

10.10.1.2.5 FUSING

1. Capacitors connected in parallel should be individually fused, when possible.

2. Caution must be used in the placement of automatic discharge safety devices with respect to fuses. If the discharge will flow through the fuses, a prominent warning sign should be placed at each entry indicating that each capacitor must be manually grounded before work can begin.

3. Special knowledge is required for high-voltage and high-energy fusing.

10.10.1.3 OPERATION AND MAINTENANCE

1. The protective devices (interlocks) shall not be bypassed unless by qualified electrical personnel when inspecting, adjusting, or working on the equipment. Proper procedures need to be followed when bypassing interlocks.

2. Procedures should be established for tagging the interlock and logging its location and the time when bypassed and restored. Written approval shall be obtained from an appropriate authority before bypassing an interlock .

3. Only qualified electrical personnel (those trained in the proper handling and storage of power capacitors and hazard recognition) shall be assigned the task of servicing/installing such units.

4. Proper PPE shall be used when working with capacitors.

5. Access to capacitor areas shall be restricted until all capacitors have been discharged, shorted, and grounded.

6. Any residual charge from capacitors shall be removed by grounding the terminals before servicing or removal.

7. Automatic discharge and grounding devices should not be relied upon.

8. Grounding hooks shall be inspected before each use.

9. Capacitor cases should be considered "charged."

10. Protective devices should be tested periodically.

11. All uninstalled capacitors capable of storing 5 J or greater shall be short circuited with a conductor no smaller than #14 AWG.

12. A capacitor that develops an internal open circuit may retain substantial charge internally even though the terminals are short-circuited. Such a capacitor can be hazardous to transport, because the damaged internal wiring may reconnect and discharge the capacitor through the short-circuiting wires. Any capacitor that shows a significant change in capacitance after a fault may have this problem. Action should be taken to minimize this hazard when it is discovered.

10.10.2 INDUCTORS

This section covers inductors as well as electromagnets and coils that are used in the following typical applications:

1. Energy storage

2. Inductors used as impedance devices in a pulsed system with capacitors

3. Electromagnets and coils that produce magnetic fields to guide or confine charged particles

4. Inductors used in do power supplies

5. Nuclear Magnetic Resonance (NMR), Electron Paramagnetic Resonance (EPR), and Magnetic Susceptibility Systems.

10.10.2.1 HAZARDS

Examples of Inductor hazards include:

1. Overheating due to overloads, insufficient cooling, or failure of the cooling system could cause damage to the inductor and possible rupture of the cooling system.

2. Electromagnets and superconductive magnets may produce large external force fields that may affect the proper operation of the protective instrumentation and controls.

3. Magnetic fields could attract nearby magnetic material, including tools and surgical implants, causing injury or damage by impact.

4. Whenever a magnet is suddenly de-energized, production of large eddy currents in adjacent conductive material can cause excessive heating and hazardous voltages. This state may cause the release or ejection of magnetic objects.

5. The worker should be cognizant of potential health hazards.

6. Interruption of current in a magnet can cause uncontrolled release of stored energy. Engineered safety systems may be required to safely dissipate stored energy. Large amounts of stored energy can be released in the event of a "quench" in a superconducting magnet.

10.10.2.2 DESIGN AND CONSTRUCTION

The following should be considered:

1. Provide sensing devices (temperature, coolant-flow) that are interlocked with the power source.

2. Fabricate protective enclosures from materials not adversely affected by external electromagnetic fields. Researchers should consider building a nonferrous barrier designed to prevent accidental attraction of iron objects and prevent damage to the cryostat. This is especially important for superconducting magnet systems.

3. Provide equipment supports and bracing adequate to withstand the forces generated during fault conditions.

4. Appropriately ground electrical supply circuits and magnetic cores and provide adequate fault protection.

5. Provide means for safely dissipating stored energy when excitation is interrupted or a fault occurs.

6. Provide appropriate warning signs to prevent persons with pacemakers or similar devices from entering areas with fields of greater than 0.001 Tesla.

7. Personnel exposure to magnetic fields of greater than 0.1 Tesla should be restricted.

8. When a magnet circuit includes switching devices that may not be able to interrupt the magnet current and safely dissipate the stored energy, provide a dump resistor connected directly across the magnet terminals that is sized to limit the voltage to a safe level during the discharge and safely dissipate the stored energy.

10.10.2.3 OPERATION AND MAINTENANCE

Verify that any inductor is de-energized before disconnecting the leads or checking continuity or resistance.

10.10.3 ELECTRICAL CONDUCTORS AND CONNECTORS

The conductors and connectors covered here are only those used in unconventional applications.

10.10.3.1 HAZARDS

Examples of hazards are as follows:

1. Metallic cooling-water pipes that are also used as electrical conductors present shock hazards (i.e., they may not be readily recognizable as electrical conductors).

2. Improper application or installation of connectors can result in overheating, arcing, and shock hazards.

3. Hazardous induced voltages and arcing can result from inadequate separation between high- and low-voltage cables.

4. Use of an improper cable for a given type of installation (routing) can result in a fire hazard.

10.10.3.2 DESIGN AND CONSTRUCTION

When working with special conductors and connectors for R&D applications, the following guidelines shall be implemented for design and construction:

1. Select cables that are listed by an NRTL for a given type of installation (such as in conduits, trays, underground, or in an enclosure) whenever possible. Since cables used for R&D are sometimes unique (such as some coaxial cables), they may not be available as NRTL listed. In that case, obtain AHJ approval.

2. Where liquid- or gas-cooled conductors are used, sensing devices (temperature or coolant-flow) shall be provided for alarm purposes or equipment shutdown if the cooling system malfunctions. Provide adequate labeling, insulation, or other protection for metallic cooling-water piping used as electrical conductors.

3. Provide engineering calculations to support overrating of conductors for any application. Avoid conductor loops (wide spacing) between high-current supply and return conductors to prevent voltage and current induction in adjacent circuits or structural members.

4. Ground coaxial cable shielding when possible. If test conditions require an ungrounded shield, provide barriers and warning signs to notify personnel that the shield is ungrounded and should be assumed to be energized. Provide suitable routing and additional protection for coaxial cables used in pulsed-power applications where the braid of the coaxial cable rises to high voltage levels.

10.10.3.3 OPERATION AND MAINTENANCE

Cable connectors and connections should be checked after installation, periodically, and should be tightened as necessary. Special attention should be given to aluminum cable connections.

Ensure that charges are not built up on equipment that has been disconnected, such as vacuum feedthrough systems.

10.10.4 INDUCTION AND DIELECTRIC HEATING EQUIPMENT

This section describes electrical hazards associated with induction heating, RF equipment, and microwave equipment used in research. The hazards are mainly associated with high-power/high-frequency RF generators, waveguides and conductors, and the working coils producing high temperatures.

10.10.4.1 HAZARDS

1. RF power as high as 50 kW and frequency in the tens of kHz range to hundreds of MHz is supplied from the RF and microwave generators. Being close to or making contact with an unprotected coil, conductors or waveguide opening may result in severe body burns.

2. Dangerous voltages are present inside the power generators.

3. Dangerous levels of RF energy may be present in the laboratory.

10.10.4.2 DESIGN AND CONSTRUCTION

1. The heating coils, sources of high-frequency energy, and other live parts outside the generator cabinet must be shielded or guarded to prevent access or contact.

2. The heating coil should have its cold (outside) lead properly grounded.

3. A coaxial cable of correct impedance and adequate construction may be desirable to deliver the RF power to the coil in order to prevent the leakage of the RF energy in the laboratory.

10.10.4.3 OPERATION AND MAINTENANCE

1. Shielding must be maintained to minimize RFMW radiation.

2. Wearing metallic objects when operating or maintaining the induction heating system is prohibited.

3. Posting suitable warnings to indicate equipment hazards.

10.10.5 LASERS AND X-RAY EQUIPMENT

This section is applicable to laser systems and x-ray equipment used in research. Both fixed and portable equipment are covered regardless of input voltage. Only electrical hazards are addressed in this subsection. Refer to ANSI Z136.1 for laser hazards and 29 CFR 1910.306 (f) for x-ray hazards.

10.10.5.1 HAZARDS

1. Dangerous voltages are present inside the equipment.

2. Implosion hazards may exist with the covers removed.

3. Energy storage devices may present a hazard due to a residual charge even when the system is de-energized

4. Dangerous voltages can exist across the impedance of the grounding conductor during operation.

5. Failure of interlocks and safety devices may allow access to energized parts.

11.0 ELECTRICAL SAFETY DURING EXCAVATIONS

11.1 GENERAL

Occurrences involving unexpected contact with underground or embedded utilities during excavations, concrete drilling and earth moving operations can occur at Department of Energy (DOE) facilities and throughout private industry.

Inadvertent striking of underground utilities can result in electrical shock, injuries, explosions, utility outages and death. These pipes, wires or conduits are frequently missing from as-built or other record drawings.

The large scale Decontamination and Demolition (D&D), environmental restoration, and new construction projects performed at DOE facilities bring with them a significant risk of contact with such underground and/or embedded utilities. It is therefore essential that effective policies and procedures be implemented to control this risk.

11.2 REGULATIONS, CODES AND REFERENCES

a. 29 CFR 1910.335 Personal Protective Equipment

b. 29 CFR 1926.416 Protection of Employees

c. 29 CFR 1926.651 Specific Excavation Requirements

d. DOE/EH-0541, Issue number 96-06 (1996) Underground Utilities Detection And Excavation.

e. DOE Operating Experience Summary 2001-12 Backhoe Ruptured a Natural Gas Line During Excavation

f. DOE Operating Experience Summary 2002-10 Temporary Electrical Power Line Severed By Trackhoe.

g. DOE Operating Experience Summary 2003-09 Energized Power Line Damaged During Excavation

h. DOE Operating Experience Summary 2003-18 Underground Electrical Cable Snagged And Cut.

i. DOE-STD-1073 Configuration Management

11.3 UTILITIES IDENTIFICATION

Before locating underground or embedded utilities, facility personnel should obtain and review available information for the location area. Resources might be available drawings, sketches, and site knowledge. Failing to thoroughly research and review all available information, from the original installation up to the present layout, before beginning an underground or embedded utility detection survey can lead to possible hazards and problems for locators. Facilities often

utilize direct burial trenches to “stack” utilities and locator equipment often identifies only the utility closest to the surface.

Facility drawings and/or configuration control methods often separate utilities by function, making this initial research very important.

Relying on locator technology, alone, has resulted in many encounters with buried and embedded utilities.

11.3.1 CONFIGURATION MANAGEMENT

a. Facility controlled drawings identifying utilities locations.
   - Voltage levels, burial depth, and elevation details for “stacked” utilities are useful information to include on these drawings.

b. As-built drawings/sketches are often required to be submitted for all new utilities installations.

c. Survey point locations are required at some DOE facilities.
   - This provides very accurate locations for future reference.
   - Some DOE facilities utilize Global Positioning Satellite (GPS) equipment to mark utilities locations.

11.3.2.1 EXCAVATION PERMIT

The excavation permit ensures that the scope of the excavation is clearly defined. It also ensures that the area to be excavated is reviewed by the appropriate facility personnel, prior to beginning the work. The use of this permit is recommended for operating facilities and older facilities which do not have exceptional configuration management. If a requirement, the permit also assures that consistent work authorization is maintained.

A typical excavation permit contains the following, as a minimum :

a. Detailed scope of work to be performed
b. Accurate definition of boundaries for the proposed excavation.
c. Sign-offs for appropriate subject matter expert reviews, if required.
d. Accurate excavation maps, with all known utilities identified and boundaries clearly marked.
e. Work authorization sign-off

11.4 UTILITIES VERIFICATION AND MARKING

a. Field walk-downs of excavation site by approved subject matter experts.

b. Testing to validate identified utilities.

c. Testing to identify utilities not yet identified

   – Ground Penetrating Radar Method.

   – Passive/Active Sonar Method.

d. Survey paint markings

- must be durable and timed to effectively coincide with the work group mobilization. These markings should be made no more than two or three days prior to the actual excavation work. They should be verified immediately prior to the beginning of the excavation work.

e. Survey flags

- must be durable and timed to effectively coincide with the work group mobilization. These flags should be installed no more than two or three days prior to the actual excavation work. They should be verified immediately prior to the beginning of the excavation work.

f. Utilities Color Coding

- same Utilities & Transportation Commission (UTC)color coding as municipalities use.

- offsite subcontractors are very familiar with this work practice.

11.4.1 FIELD LOCATION OF EXCAVATION BOUNDARIES

Accurate identification of excavation boundaries is absolutely necessary.

It accurately communicates those boundaries to all workers and supervisors.

It also sets the excavation limits, based on the research and locator testing provided for that particular excavation.

a. Excavation maps can be used to identify exact excavation boundaries

   (Field markings can easily be transferred from these maps)

b. Excavation maps can be attached to the excavation permits for additional communication assurance.

c. Field excavation boundaries should be appropriately marked.

11.4.2 LOCATOR EQUIPMENT SELECTION AND LIMITATIONS

It is important to note that no locator technology should be relied upon as the sole source for identifying buried/embedded utilities.

Configuration management is the most effective identification method.

The majority of underground utility locators being used today apply a signal to the underground system being located. This signal may either be of an audio or radio frequency. An active signal is applied to the underground utility by various methods with the signal being generated from the transmitter unit of the location system. Proper setup of the transmitter increases the accuracy of the receiver unit. Proper use of the receiver unit requires that the antennas be

moved in a straight path and not in a swinging motion. Accurate depth readings are gained from experience.

The latest electromagnetic pipe and cable locators feature microprocessor-controlled transmitters and receivers capable of detecting power lines, telephone cables, and metal piping at depths up to 15 or 20 feet. These detection devices operate with multiple discrete broadband frequencies, antenna configurations, and grounding capabilities.

INDUCTIVE CLAMP OR COUPLER

A second method of applying a signal to a known utility is the inductive clamp or coupler, where the signal is induced to the utility by means of a jawed clamp placed around the utility access point without the grounding system being disturbed. Inductive couplers and clamps all apply a signal to the utility in basically the same manner. The signal is induced onto the utility to be located by an electromagnetic field created by the coupler and clamp. It is a requirement that the utility have grounds in place at both ends of the section to be located. Missing bonds across insulated sections of the utility will prevent this method from being used along the entire length of the utility. Underground metal pipes and cables may not be joined with conductive materials, thus making them short separated pieces of a broadcast antenna. There may be multiple utilities bonded together, making their individual resolution difficult. These and other problems create the need for variety within the electromagnetic method itself. Couplers and clamps should be positioned below the electrical grounding point on CATV, electrical, and telephone cables. Systems that do not use earth ground, such as railway signal cables, cannot be located with couplers or clamps. Gas meters with insulated couplings should not be bonded. They should be direct-connected.

DETECTOR FREQUENCY AND POWER CONSIDERATIONS

As an operator attempts to detect the location of underground/embedded utilities, the frequency and power capabilities of the instrument being used must be understood. In many detectors, as the frequency increases, the available power decreases.

Frequency selection can affect depth of penetration, distance of travel, resonance efficiency, and resolution issues, as well as other operating characteristics. Most locator manufacturers preset frequencies, and there will be an optimum frequency to use for a particular utility system. These are some of the most frequently used :

a. **ELF (Extremely Low Frequency)** operates at below 300 Hz. It is typically good for power cables energized and carrying a load, water pipes grounded to a power system energized and carrying load, and deep, very conductive, long length utilities.

b. **VLF (Very Low Frequency)** operates between 3kHz and 30 kHz. It is typically good for very long, continuous conductors, and deep conductive long length utilities.

c. **LF (Low Frequency)** operates between 30kHz and 300kHz. It is typically good for shallow (8 feet or less) conductors of medium length.

d. **HF (High Frequency)** operates between 3MHz and 30MHz. It is typically good for cables; shallow short conductors.

Not all utilities are metallic or of sufficient length in the ground. Therefore, resonant electromagnetic methods will not always be the answer. The current family of surface geophysical methods available for utility and other near-surface structure or hazard detection is extensive. Other electromagnetic techniques such as measuring eddy currents, differential heat, and thermal reflection are also available.

Here are three types presently in use :

a. **Terrain Conductivity** uses the VLF range, using Eddy Currents to measure differences in ground conductivity. It has proven useful in locating very deep or short metallic utilities and air/gas-filled utilities.

b. **Ground penetrating Radar** uses 1-100 Gigahertz microwaves measures reflections due to dielectric differences in subsurface materials. It measures strength and amount of time necessary to bounce signal off different layers. This technology requires resistant soils. Utilities must be of sufficient size to be detected. The deeper the utility, the larger it must be in order to be detected. Highly different soil/utility materials give the best results.

c. **Thermal** measures heat output. When the amount of heat from the utility is different from that of the surrounding soil, it might be detectable. Some utilities produce their own exothermic heat and/or retain heat longer than the surrounding soil

Choosing the appropriate locator technology and methods will greatly improve the chances of success.

11.4.3 LOCATOR OPERATOR TRAINING

Each piece of locating equipment is unique. It is very important that operators be trained to use the equipment before applying it in a field application that will determine safe boundaries for excavation workers. Some of the ground penetrating radar equipment is very dependent on operator interpretation of the characterization profiles generated from the locator equipment. Operators unfamiliar with the equipment specifications and operating instructions can make interpretive mistakes which can lead to serious injury to the excavation workers.

Proper selection of available techniques and the use and interpretation of data produced by this equipment is essential to the accurate and comprehensive detection of underground utilities. A regular calibration and maintenance of locator equipment should be established.

11.4.4 FIELD MARKING OF IDENTIFIED UTILITIES

Paints / Surface Markings are used at many jobsites. Care should be taken to ensure the markings are clearly present and identifiable at the time the excavation workers arrive at the excavation site. Many cases of faint markings and/or markings washed away by rain have been documented at jobsites. The recent use of biodegradable survey paints has increased this possibility. They are not as durable as former types of survey paints used.

Lawn mowing equipment can erase or diminish the effectiveness of survey paints in outside areas.

Stakes and/or Flags are used to mark identified utilities at other jobsites. These must be durable, as well. They must be able to withstand the environments they are exposed to. Lawn mowing equipment can erase all traces of survey flags in very short order. Incidents resulting from missing and even relocated stakes or flags have been documented.

Utilities Color Coding is used at most work locations. The standard utilities color-coding is well understood by most excavations subcontractors, and serves as a very effective communications tool for the facility owner.

Plastic Utilities Tape Ribbon is used in most facilities as well as commercial and industrial applications. It is installed directly above the utility, but below the surface of the ground so an excavator will dig it up, and thereby indicate the presence of a utility, before the utility is damaged.

Metallic Utilities Tape Ribbon is used in many facilities. It is buried at a specified depth above the utility. This ribbon can be detected and its route traced by a metal detector.

11.5 UTILITIES DISPOSITION

11.5.1 OPERATING FACILITIES CONSIDERATIONS

Utilities identified during the planning stages should be evaluated to determine their function as it relates to the facility. Every effort should be made to de-energized and lock out power cables which could be encountered by excavations workers. Telecommunications and signal/monitoring circuits, likewise, require consideration. Planned outages is the preferred approach. NFPA 70E is the recognized standard for de-energizing equipment as the first priority.

Don't let schedule and/or convenience take precedent.

Impact to the facility in the event of damage to these cables/circuits should be part of the evaluation.

11.6 WORK CONTROL DURING EXCAVATIONS

11.6.1 SAFETY EQUIPMENT AND PROCEDURES

The requirements for safety equipment should be understood. Some concrete wall and slab excavations require both mechanical and electronic drill-stops in some facilities. Some facilities require insulated footwear and/or gloves for certain types of excavations or certain site areas. These requirements are required to be effectively communicated to the excavation workers.

11.7 THE EXCAVATION PROCESS

Once the planning is complete, the excavation process is ready to begin.

Work control procedures are in place, all hazards have been identified, hazards elimination/mitigation is established and personal protection requirements have been determined and are understood by all involved excavation personnel.

11.7.1 EXCAVATIONS IN CONCRETE WALLS AND SLABS

Excavations in concrete walls and slabs should be included in facility procedures. Drilling holes, coring, chipping, or cutting holes in these areas is included. Most facilities require excavation permits be issued for penetrations to a depth of 3" or greater in most concrete walls or slabs. Some facilities, due to their design, will vary this depth reference.

The concern is encountering structural rebar or, worse yet, energized electrical power cables. DOE sites have recorded many incidents of this type. The opportunity for this type of incident seems to be higher when dealing with older facilities/buildings. Configuration management for these commodities can be just as bad in newer buildings. Embedded commodities are often omitted from as-built drawing requirements. Most installation drawings are diagrammatic, or field routed commodity driven. This policy can provide significant problems in the years following installation. A facility that requires accurate as-built drawings of embedded power cable conduits is investing in their electrical safety program.

One significant enhancement in the concrete excavation safety program has been the increased use of electronic drill-stops. Used across the DOE Complex and in commercial/industrial facilities, this safety instrument will interrupt power and stop the drilling process at first encounter with a grounded metal object or an energized circuit. Information on several of these types instruments can be found at www.lorien.com and www.drillco.com.

The use of insulated rubber gloves is recommended for all workers drilling or cutting into concrete walls and slabs, as an additional safety measure. Very few facilities have configuration management of embedded power cables that would preclude their use.

11.7.2 MACHINE OR HAND DIGGING

Machine digging in earth requires careful consideration. The identified depth of utilities is not accurate in many cases. Machine operators, in general, don't appreciate the value of maintaining the integrity of energized power cables. They rarely understand the purpose of the power feeds. So to dig them up is not that important to them. They are usually in a hurry to dig the trench and go to another job. A strong program, with specific procedures, can make the difference between a successful excavation and an incident or accident.

A significant number of facilities require identified utilities to be positively located by hand digging to uncover them. That provides additional assurance of their location and depth of burial. Many times, both dimensions are significantly different from those marked by locating equipment. Special tools and personal protective equipment are often used to accomplish this. The "air lance" is one example in use today.

11.7.3 WORKER PROTECTION

Worker protection during excavation work requires careful consideration.

More workers are typically involved in the work activity, and can be affected by other workers in proximity to the excavation process.

11.8 AS-BUILT DRAWINGS

As-built drawings have provided significant improvements in the various excavation activities/programs across the DOE Complex. Configuration Management of buried/embedded utilities has improved at every facility which implements the as-built drawing requirement. It is a tool that is strongly recommended. As-built drawings should not be relied upon as the only source for the accurate location of underground/embedded utilities.

12.0 REFERENCES

Note: Since all reference materials are periodically revised, the attached references may include dated editions. Refer to the most current edition of each document when using the reference.

American National Standards Institute

ANSI C50.13-1989, "Rotating Electrical Machinery."

ANSI Z41-1991, "Personal Protection-Protective Footwear."

ANSI Z87.1-1979, "Practice for Protection Occupational and Educational Eye and Face Protection." ANSI Z89.1-1986, "Protective Headwear for Industrial Workers-Requirements."

ANSULIA Z136.1, "Safe Use of Lasers."

American Society of Mechanical Engineers ASME A17.1, "Safety Code for Elevators and Escalators," 1984. ASME A17.2.1, "Inspectors Manual for Electric Elevators," 1993. ASME A17.2.2, "Inspectors Manual for Hydraulic Elevators," 1994. ASME A17.2.3, "Inspectors Manual for Escalators and Moving Walks," 1994. ASME A17.3, "Safety Code for Existing Elevators and Escalators," 1986. ASME B30.2, "Overhead and Gantry Cranes."

ASME B30.11, "Monorail Systems and Underhung Cranes." ASME B30.16, "Overhead Hoists (Underhung)."

American Society for Testing and Materials ANSUASTM D120-1987, "Specifications for Rubber Insulating Gloves." ASTM D178-1988, "Specifications for Rubber Insulating Matting." ASTM D1048-1988a, "Specifications for Rubber Insulating Blankets." ASTM D1049-1988, "Specifications for Rubber Insulating Covers." ASTM D1050-1990, "Specifications for Rubber Insulating Line Hoses."

ASTM D1051-1987, "Specifications for Rubber Insulating Sleeves."

ASTM F478-92, "Specification for In-Service Care of Insulating Line Hose and Covers."

ASTM F 496-96, "Specification for the In-Service Care of Insulating Gloves and Sleeves."

ASTM F696-91, "Specification for Leather Protectors for Rubber Insulating Gloves and Mittens."

ASTM F711-86, "Specification for Fiberglass-Reinforced Plastic (FRP) Rod and Tube Used in Live Line Tools."

ASTM F 855-90, "Standard Specification for Temporary Grounding Systems to be Used on De-energized Electric Power Lines and Equipment."

ASTM F887-91 a, "Specification for Personal Climbing Equipment."

ASTM F1116-88, "Test Method for Determining Dielectric Strength of Overshoe Footwear."

ASTM F1117-87, "Specification for Dielectric Overshoe Footwear."

ASTM F1505-94, "Specification for Insulated and Insulating Hand Tools."

ASTM F1506-94, "Textile Materials for Wearing Apparel for Use by Electrical Workers Exposed to Momentary Electric Arc and Related Thermal Hazards."

ASTM F1742-96, "PVC Insulating Sheeting."

ASTM PS-57, "Test Method for Determining the Ignitibility of Clothing by the Electrical Arc Exposure Method Using a Mannequin."

ASTM PS-58, "Test Method for Determining the Arc Thermal Performance (Value) of Textile Materials for Clothing by Electric Arc Exposure Method Using Instrumented Sensor Panels."

Crane Manufacturers Association of America

CMAA-70, "Specifications for Electrical Overhead Traveling Cranes."

CMAA-74, "Specifications for Top Running and Under Running Types of Single Girder Electric Overhead Traveling Cranes."

CMAA "Crane Operators' Manual."

CMAA "Overhead Crane and Inspection Checklist."

Department of Energy Orders, Manuals, and Guides

4330.413, "Maintenance Management Program," 1994.

440.1 "Worker Protection Management for DOE Federal and Contractor Employees."

M 440.1-1, "DOE Explosives Safety Manual."

Department of Defense Standards

DOD 6055.9-STD, "DOD Ammunition and Explosives Safety Standards," Department of Defense, 1986.

DOD FIPS-PUB-94, "Guidelines on Electrical Power for ADP Installations."

DOD MIL-HDBK-419A (Volumes 1 and 2), "Grounding, Bonding, and Shielding for Electronic Equipment and Facilities (Basic Theory, Applications)."

Department of Labor-OSHA

29 CFR 1910, "Occupational Safety and Health Standards."

29 CFR 1926, "Safety and Health Regulations for Construction."

30 CFR 57, "Safety and Health Standards-Underground Metal and Nonmetal Mines."

30 CFR 75, "Mandatory Safety Standards-Underground Coal Mines."

30 CFR 77, "Mandatory Safety Standards, Surface Coal Mines and Surface Work Areas of Underground Coal Mines."

Institute of Electrical and Electronic Engineers

IEEE 80, "Guide for Safety in AC Substation Grounding," 1986.

IEEE 141-1993, "Electric Power Distribution for Industrial Plants," (IEEE Red Book).

IEEE 142-1991, "Recommended Practice for Grounding of Industrial and Commercial Power Systems," (IEEE Green Book).

IEEE 484, "Recommended Practice for Design and Installation of Vented Lead-Acid Batteries for Stationary Applications.."

IEEE 450-1995, "Maintenance, Testing, and Replacement of Large Lead Storage Batteries for Generating Stations and Substations."

IEEE 516-1995, "IEEE Guide for Maintenance Methods on Energized Power-Lines."

IEEE 524-1992, "IEEE Guide to the Installation of Overhead Transmission Line Conductors."

IEEE 524A-1993, "IEEE Guide to Grounding During the Installation of Overhead Transmission Line Conductors."

IEEE 978-1984, "IEEE Guides for In-Service Maintenance and Electrical Testing of Live Line Tools."

IEEE 1048-1990, "IEEE Guide for Protective Grounding of Power Lines."

IEEE 1100, "Recommended Practice for Powering and Grounding Sensitive Electronic Equipment."

IEEE/ANSI C-2, "National Electrical Safety Code," 1996.

IEEE C62.11-1987, "Metal-Oxide Surge Arrestors for AC Power Circuits."

IEEE/ANSI C95.1 (1991)"Electromagnetic Fields, Safety Levels With Respect to Human Exposure to Radio Frequency, 3KHz to 3000Hz."

Instrument Society of America

ANSI/ISA RP12.6-1995, "Wiring Practices for Hazardous (Classified) Locations, Instrumentation Part 1: Intrinsic Safety."

ANSI/ISA - S82.01 - 1994, "Safety Standard for Electrical and Electronic Test, Measuring, Controlling, and Related Equipment - General Requirements."

ANSI/ISA - S82.02 - 1988, "Safety Standard for Electrical and Electronic Test, Measuring, Controlling, and Related Equipment: Electrical and Electronic Test and Measuring Equipment," (Partial Revision and Redesignation of ANSI C39.5-1974).

ANSI/ISA - S82.03 - 1988, "Safety Standard for Electrical and Electronic Test, Measuring, Controlling, and Related Equipment: Electrical and Electronic Process Measurement and Control Equipment," (Partial Revision and Redesignation of ANSI C39.5-1974).

National Electrical Manufacturers Association NEMA 250, "Enclosures for Electrical Equipment," 1991. NEMA 280, "Application Guide for Ground Fault Circuit Interrupters Publication," 1990. NEMA MG1, "Motors and Generators," 1993.

NEMA PB2.2, "Application Guide for Ground Fault Protection Devices for Equipment."

National Fire Protection Association

NFPA Handbook, "Electrical Installations in Hazardous Locations," by P. J. Schram and M. W. Earley.

NFPA/ANSI 70, "National Electrical Code," 1996.

NFPA/ANSI 70B, "Recommended Practice for Electrical Equipment Maintenance," 1990.

NFPA/ANSI 70E, "Electrical Safety Requirements for Employee Workplaces," 1995.

NFPA 72, "National Fire Alarm Code," 1996.

NFPA 77, "Recommended Practice on Static Electricity," 1993.

NFPA 101, "Life Safety Code," 1994.

NFPA 325, "Fire Hazard Properties of Flammable Liquids, Gases, and Volatile Solids," 1994.

NFPA 496, "Purged and Pressurized Enclosures for Electrical Equipment in Hazardous Locations," 1993.

NFPA 497M, "Classification of Gases, Vapors, and Dusts for Electrical Equipment in Hazardous (Classified) Locations," 1991.

NFPA 780, "Standard for the Installation of Lighting Protection Systems," 1995.

Underwriters Laboratory

UL 45, "UL Standard for Safety Portable Electric Tools" 1994.

UL 508, UL Standard for Safety, Industrial Control Equipment, 1994.

UL 698, "UL Standard for Safety, Industrial Control Equipment for Use in Hazardous (Classified) Locations," 1996.

UL 877, "UL Standard for Safety, Circuit Breakers and Circuit Breaker Enclosures for Use in Hazardous (Classified) Locations," 1996.

UL 886, "UL Standard for Safety, Outlet Boxes and Fittings for Use in Hazardous (Classified) Locations," 1995.

UL 894, "UL Standard for Safety, Switches for Use in Hazardous (Classified) Locations," 1996.

UL 913, "UL Standard for Safety, Intrinsically Safe Apparatus and Associated Apparatus for Use in Class I, II, and II, Division I, Hazardous (Classified) Locations," 1988.

UL 1244, "Electrical and Electronic Measuring and Testing Equipment," 1993.

Underwriters Laboratory, Inc., Hazardous Location Equipment Directory, 1996.

Other Reference Materials

Crouse Hinds and Appleton Code Digests

EIA/TIA-607, "Commercial Building Grounding."

IEC 1010-1, "Safety Requirements for Electrical Equipment for Measurement, Control, and Laboratory Use, " 1990.

International Association of Electrical Inspectors, "Soares Book on Grounding." Society of Fire Protection Engineers, "Handbook of Fire Protection Engineering." Uniform Building Code Chapter 51

Uniform Federal Accessibility Standard; Handicapped Wheelchair Lifts

APPENDIX A DOE MODEL ELECTRICAL SAFETY PROGRAM

(THE "DOE MODEL ELECTRICAL SAFETY PROGRAM" WAS CREATED AS OF THE RESULT OF REQUIREMENTS FROM "REPORT OF THE TASK GROUP ON ELECTRICAL SAFETY OF DEPARTMENT OF ENERGY FACILITIES", JANUARY 1993, DOE/EH-0298)

EXECUTIVE SUMMARY

The Task Group on Electrical Safety of Department of Energy Facilities, in its January 1993 report, described a Model Electrical Safety Program. This concept has been expanded from its original narrative form into more detailed guidelines, drawing upon the electrical safety program of the Sandia National Laboratory for additional material. This model program is offered to the entire Department of Energy (DOE) complex as guidance to assist in developing and maintaining an effective and sound electrical safety program to ensure the safety and well being of all DOE, including contractor, and subcontractor employees working within any DOE site or facility. The model program has been designed to address the major areas of concern identified by the Task Group.

In essence, an Electrical Safety Program for protecting DOE and contractor workers and facilities should be founded firmly on established requirements of OSHA's electrical safety regulations in 29 CFR 1910 and 29 CFR 1926, National Electrical Code (NEC), DOE Orders and applicable state, local, mine, and tunnel safety standards. This program should establish an electrically safe workplace-free from recognized electrical hazards for all employees. Management should commit to involvement at all levels based on familiarity with the requirements.

Each site should establish an electrical safety committee and designate an Authority Having Jurisdiction (AHJ) for interpreting the electrical requirements of OSHA, NEC, and other standards applicable to the site or its facilities. All personnel engaged in electrical work should be trained to have knowledge and understanding of electrical safe work practices. Appropriate electrical testing equipment and personal protective equipment should be provided, properly maintained and used.

A proactive preventive maintenance and inspection program for electrical systems and equipment should be in place and staffed by qualified electricians.

All electrical equipment purchases should meet appropriate codes and electrical safety requirements, as determined by a nationally recognized testing laboratory or as approved by the AHJ.

Before a site can have a successful electrical safety program, a continuous improvement effort and commitment must be clearly understood and shared throughout the site.

Each facility must demonstrate continuous improvement for design, construction, operation, maintenance and revisions at the site. Improvements must be tested against changing codes and regulations as they are made.

The ten principles of personal safety are as follows:

1. Plan every job-Planning is the key to preventing incidents therefore, eliminating injuries.

2. Anticipate unexpected events-If a person thinks about what can go wrong and does something about it, then a potential incident can be prevented.

3. Use the right tool for the job—Each employee must make sure that the correct tool is used and management must make sure the correct tool is available.

4. Use procedures as tools-Even though procedures are only paper or text, they should be viewed as tools to prevent injury.

5. Isolate the equipment-The best way to avoid accidental release of energy is by isolating the equipment before starting the job (lockout/tagout).

6. Identify the hazard-Employees who are exposed or potentially exposed must be able to recognize when and how they are exposed. Management has the responsibility to provide training to deal with each known hazard, as required.

7. Minimize the hazard-Take all known steps to minimize each hazard and the exposure to each known hazard.

8. Protect the person-The last chance to avoid an injury is to wear personal protective equipment (PPE). Each person must use all protective equipment that is needed. It is management's responsibility to provide all appropriate PPE.

9. Assess people's abilities-Knowledge and ability help prevent injuries. Each person must recognize their limitations whether physical, mental or emotional. Management must also recognize the same limitations.

10. Audit these principles-The audit should validate the principles related to the people, task, and work environment. It should gauge the visibility of the principles in actual behavior.

The six basic elements of an effective Electrical Safety Program are listed below.

- Management must have complete commitment to the program;
- Effective training for all degrees of hazard and a baseline for training must be established;
- Effective and complete safe electrical work practices must be established;
- Documentation must be kept for all activities;
- Electrical safety engineering support must be made; and
- Oversight for the electrical safety program must be established, also.

The model program described in the following pages is presented in terms of purpose, scope, and ownership; performance objectives; responsibilities, authorities, and interfaces; definitions, and implementation guidance. References are listed for more in-depth guidance. A model Charter of the Electrical Safety Committee is provided as an appendix.

1. PURPOSE, SCOPE, AND OWNERSHIP

1.1 PURPOSE

The purpose of an electrical safety program is to

- promote an electrically safe workplace free from unauthorized exposure to electrical hazards for all employees and contractors;
- provide direction to implement electrical safety requirements of Department of Energy (DOE) orders, criteria, and guides. (See Section. 6, References); and
- achieve compliance with Occupational Safety and Health Administration (OSHA) regulations in accordance with DOE orders.

An electrically safe workplace will be achieved by

mandating and implementing the electrical subparts of Title 29 Code of Federal Regulations 29 CFR 1910 and 29 CFR 1926 as directed by the Secretary of DOE and OSHA; and

applying the National Electrical Code [National Fire Protection Association (NFPA 70)] and any exceptions by applicable state or local municipal requirements to the design, construction, and maintenance operation of facilities and research and development of electrical/electronic systems.

1.2 SCOPE

The Electrical Safety Program shall apply to all site organizations. These organizations shall conform to

- the host's site electrical safety requirements, and
- the local, city, county, or state jurisdiction.

1.3 OWNERSHIP

Site management shall appoint an organization to be owner of the Electrical Safety Program.

The Electrical Safety Program governs:

- the electrical safety program owned by each department. The departments will develop and implement safe operating procedures specifically applicable to special electrical hazards in their workplaces.

2. PERFORMANCE OBJECTIVES

The Electrical Safety Program has the following objectives.

Establish an effective electrical safety program by

- establishing the authority having jurisdiction (AHJ) for interpreting OSHA, NFPA 70 and other requirements for electrical work;
- establishing requirements and controls for implementing the program;
- providing guidance to all departments, which includes developing and implementing safe operating procedures with electrical requirements;
- developing an Electrical Safety Program self-assessment process;
- establishing measurement criteria and documentation for self-assessment of the Electrical Safety Program;
- evaluating the Electrical Safety Program on an annual basis to be followed by action plans in response to findings; and
- evaluating each department against the requirements.

Ensure a safe workplace with the lowest reasonable risks from electrical hazards by

- establishing training programs for qualified and unqualified worker requirements and safe work practices for all personnel engaged in electrical work in accordance with 29 CFR 1910.331-335;
- complying with all applicable electrical requirements of 29 CFR 1910 and 29 CFR 1926; the NFPA;
- American National Standards Institute (ANSI-C2), the National Electrical Safety Code (NESC); DOE orders; and state, county and local revisions of the preceding requirements;
- requiring the development and maintenance of an Electrical Safety Program; and allocation of resources for implementing this program.

3. RESPONSIBILITIES, AUTHORITIES, AND INTERFACES

3.1 MANAGEMENT

Management ensures that the Electrical Safety Program is integrated into an overall Environmental, Safety, and Health (ES&H) program, selects the Electrical Safety Committee Chair, and approves the committee's charter.

3.2 ES&H MANAGERS

ES&H managers provide oversight for implementing the Electrical Safety Program.

3.3 ELECTRICAL SAFETY COMMITTEE

The Electrical Safety Committee (ESC) should act as the AHJ for interpreting electrical codes and regulations.

The ESC

- presents management with the requirements and training needed to implement the program;
- advises management of the need to fund and support these requirements;
- maintains and assists in the implementation of the Electrical Safety Program;
- develops and maintains the electrical safety manual;
- assists the departments by interpreting the electrical requirements of DOE orders, criteria, and guides and other codes, standards, and practices;
- maintains a copy of each interpretation given; and
- publishes electrical safety bulletins.

The committee interfaces with DOE, all organizations and sites, and other DOE contractors.

3.3.1 ESC SUBCOMMITTEES

The ESC subcommittees address site-wide electrical safety issues and may be comprised of ESC members as well as non-Electrical Safety Committee members. The electrical chair appoints subcommittee chairs, who are not required to be members of the ESC. All subcommittee reports and recommendations are approved by a majority of the ESC.

3.4 MAINTENANCE MANAGERS

Maintenance managers implement the Electrical Safety Program by developing an electrical preventative maintenance program and providing qualified electricians. They also ensure that managers, first line supervisors, and a staff of crafts workers and their assistants complete all applicable courses of electrical safety training. Maintenance managers also ensure that all facilities are maintained in compliance with NEC (NFPA 70) and the NESC (ANSI-C2).

3.5 FACILITY OPERATIONS AND MAINTENANCE DEPARTMENT MANAGERS

Operations managers are responsible for implementing the Electrical Safety Program by providing safe work procedures and permits for high and low voltage work as required. They also provide and implement other critical procedures such as lockout/tagout, testing, and safety-related work practices as required by 29 CFR 1910.331-335. These managers ensure that crafts workers of all disciplines and their immediate supervisors working with, or in proximity to, electrical equipment receive

- electrical safety awareness training;
- general and job-specific training in safe electrical work practices as required in 29 CFR 1910, Subpart S; and
- training in NFPA and ANSI codes and standards.

3.6 FACILITY ENGINEERING DESIGN DEPARTMENT MANAGERS

Facility engineering managers are responsible for implementing requirements of this Electrical Safety Program during facility design by ensuring compliance with DOE Order 6430JA "General Design Criteria." These managers also ensure that the electrical engineers and designers attend

- electrical safety awareness training;
- general and job-specific training in safe electrical work practices as required in 29 CFR 1910, Subpart S; and
- training in NFPA, IEEE, and ANSI codes and standards.

In addition, they also ensure that all workplace modification designs are m compliance with 29 CFR 1910, Subpart S, and NFPA 70E. They also provide and maintain up-to-date electrical drawings to adequately describe the various building systems and modifications.

3.7 CONSTRUCTION MANAGERS

Construction managers are responsible for implementing and enforcing the requirements of NFPA 70, ANSI C2, and OSHA 29 CFR 1926 during construction of all facilities by providing AHJ-approved certification for electrical inspectors. They also ensure that the inspectors receive training in NFPA 70, OSHA 29 CFR 1926, ANSI C2, and electrical safety awareness.

3.8 SAFETY ENGINEERING MANAGERS

Safety managers provide oversight and customer liaison for electrical safety for the departments. They also provide cognizant electrical safety professionals trained in the application of NEC, OSHA, etc.

3.9 DEPARTMENT MANAGERS

Department managers are responsible for implementing Section 5 of this Electrical Safety Program in their departments by:

- identifying electrical hazards and documenting them within their departments,
- familiarizing personnel with electrical hazards,
- developing and implementing safe operating procedures to ensure safe electrical work practices that mitigate the risks of electrical hazards,
- developing and implementing an action plan for documenting and correcting electrical deficiencies,
- conducting periodic inspections of their workplaces and electrical equipment,
- conducting safety meetings that include electrical safety topics,

- ensuring that personnel receive Electrical Safety Awareness Training and other task specific electrical safety training as required by 29 CFR 1910.332,
- ensuring that their contractors comply with the requirements of this program as applicable, and
- developing interfaces with their representatives on the ESC.

3.10 EMPLOYEES, VISITORS, ON-SITE CONTRACTORS AND SUBCONTRACTORS

All employees and on-site contractors are responsible for:

- having an awareness of the electrical hazards in their workplaces;
- reporting electrical occurrences, shocks, and discovered hazards;
- reporting all electrical shocks as injuries to the Health Services Department;
- reading, understanding, and following applicable safe operating procedures having electrical requirements;
- adopting and implementing safe electrical work practices;
- attending appropriate Electrical Safety Awareness Training and other equivalent job-specific training as required by 29 CFR 1910.332;
- using appropriate personnel protective equipment; and
- developing interfaces with their representatives on the ESC.

3.11 PURCHASING MANAGERS

Purchasing managers are responsible for specifying that, when available, purchases of electrical equipment and appliances are listed by a nationally recognized testing laboratory (NRTL) such as Underwriters' Laboratories, Inc., (UL).

3.12 ES&H TRAINING MANAGER

These managers are responsible for developing and overseeing electrical safety training courses, including any site-specific electrical safety training courses, as required by the ESC and the Electrical Safety Program.

4. DEFINITIONS

Authority Having Jurisdiction (AHJ)

Interprets the requirements of the National Electrical Code (NFPA 70); the National Electrical Safety Code (ANSI C2); 29 CFR 1910, Subpart S; 29 CFR 1926, Subparts K and V; and DOE Order 6430.1A, "General Design Criteria." Approves electrical equipment, wiring methods,

electrical installations, and utilization equipment for compliance. Coordinates these functions with ES&H management and the DOE area or field office.

Approved

Acceptable to the AHJ.

Appliance

Utilization equipment, generally other than industrial, normally built in standardized sizes or types, that is, installed or connected as a unit to perform one or more functions such as refrigerators, air conditioning, and so forth.

Electrical Shock, Reportable

Any electrical shock is classified as an injury and must be reported immediately to health services and supervision.

The employee must not attempt to evaluate the severity of the shock or its effects without medical consultation.

Equipment

Material, fittings, devices, appliances, fixtures, apparatus, and so forth, used as part of, or in connection with, an electrical installation.

Examination

Examination process described in 29 CFR 1910.303(b)(1), "Examination", and NFPA 70, Article 110-3, "Examination, Identification, and Use for Equipment". These examinations are performed by a qualified person to ensure that electrical equipment is free from recognized hazards that are likely to cause death or serious physical harm.

Equipment, Utilization

Equipment that uses electrical energy for electronic, electromechanical, chemical, heating, lighting, or similar purposes.

Labeled

Equipment or materials to which a label, symbol, or other identifying mark has been applied by an NRTL.

Listed

Equipment or materials included in a list published by an NRTL

Nationally Recognized Testing Laboratory (NRTL)

An organization acceptable to the AHJ and concerned with product evaluation that maintains periodic inspection of production of listed equipment and materials. The NRTL ensures that the equipment or materials meet appropriate designated standards or have been tested and found suitable for use in a specified manner. (Refer to 29 CFR 1910.7 "Definition and Requirements for a Nationally Recognized Testing Laboratory.")

Personnel

Employees and on-site contractors.

Qualified Personnel

Personnel trained and familiar with the construction and operation of electrical systems and equipment and their associated hazards. (Refer to 29 CFR 1910.399, "Definitions", Qualified Person, Notes 1 and 2.)

Qualification Requirements for AHJ Inspectors

Current AHJ recognized electrical inspection certification, or AHJ-approved education and experience in applying the requirements contained in NFPA 70; ANSI C2; 29 CFR 1910, Subpart S; 29 CFR 1926, Subparts K and V, and DOE Order 6430. IA, General Design Criteria.

NOTE: AHJ inspectors derive their authority from and coordinate their interpretations through the ESC.

5. IMPLEMENTATION GUIDANCE

5.1 INTRODUCTION

The objective of this section is to provide multilevels of management with the criteria to implement this Electrical Safety Program in their organizations. To achieve this objective, managers and ES&H coordinators should

- identify electrical hazards in their workplaces;
- familiarize personnel with these electrical hazards;
- develop and implement safe operating procedures to ensure safe electrical work practices that mitigate the risks of electrical hazards;
- conduct periodic inspections of their workplaces and electrical equipment;
- develop and implement an action plan for documenting and correcting electrical deficiencies, and
- ensure that personnel receive Electrical Safety Awareness Training and other job-specific electrical safety training as required by 29 CFR 1910.332.

Involving all employees and on-site contractors in the electrical safety process is essential to ensure successful implementation of this program.

5.2 ADMINISTRATION AND SAFE CONDUCT OF ELECTRICAL WORK

Performance Objective:

Minimize personnel exposure to electrical hazards.

To ensure the safe conduct of electrical work, each organization must

- define, establish, and understand individual accountabilities, authorities, interfaces, roles and responsibilities;
- properly allocate resources to satisfy requirements;
- establish administrative controls and procedures to meet the hazard assessment and work
- practices of 29 CFR 1910.331-335;
- establish procedures to ensure proper review, approval, work authorization, oversight and
- documentation for electrical work;
- conduct safety meetings on job-related electrical issues; and
- implement 29 CFR 1910.333 lockout/tagout requirements and procedures.

Electrical safety related work practices will be implemented by each organization m accordance with 29 CFR 1910 as amended in August 1991:

- 1910.331, Qualified and Unqualified Employees
- 1910.332, Training
- 1910.333, Selection and Use of Work Practices
- 1910.334, Use of Equipment
- 1910.335, Safeguards for Personnel Protection

5.3 TRAINING

Performance Objective:

Establish qualification requirements, training programs and certifications where appropriate for all personnel.

Prior to performing electrical work, personnel must be qualified to perform job-related electrical tasks as required by 29 CFR 1910.332.

Personnel exposed to the presence of voltages of 50 V or more will have formal electrical safety awareness training. This training can be in a classroom or on the job.

All training must be documented.

- Instructors must provide course outlines.
- Proof of successful completion must be maintained in appropriate files.

Minimum training requirements should include

- electrical safety awareness;
- electrical safety theory;
- applicable codes, DOE orders, regulations, and standards;
- demonstrations and hands-on practice;
- use and care of personal protective equipment;
- job-specific safe electrical work practices; and
- electrical requirements of safe operating procedures and operating procedures.
- Personnel working with high voltage (greater than 600 V) must have specialized electrical awareness training.
- Periodic training refresher courses are required to maintain and update skills and code requirements.

Management and supervision who oversee electrical work must have completed Electrical Safety Awareness Training at a level commensurate with the level of work being performed.

5.4 PERSONAL PROTECTIVE EQUIPMENT

Performance Objective:

Provide personal protective equipment for electrical work. Establish documented procedures for its use, care, maintenance, and testing. [Guidance for these procedures can be found in 29 CFR 1910.137 and 29 CFR 1910.268(f).]

Managers shall ensure that adequate resources are available to provide personal protective equipment in compliance with applicable codes and standards. In addition, they shall ensure that:

- personnel are trained in its use in accordance with documented procedures;
- procedures are established and implemented for documented controls of protective equipment such as inventory, storage, maintenance, and testing;
- protective equipment requirements and usages are specified in the safe operating procedures;
- protective equipment is inspected prior to each use;
- high-voltage equipment is inspected prior to each use according to appropriate recognized standards and

- grounding equipment, cables, clusters, and sticks, are inspected annually and prior to each use.

5.5 ELECTRICAL PREVENTIVE MAINTENANCE (EPM) PROGRAM

Performance Objective:

Establish an electrical preventative maintenance program to ensure safe and reliable operation of electrical wiring, protection devices, and operating equipment such as switches, circuit breakers, utilization equipment, and appliances.

Managers will ensure that adequate resources are available to provide for compliance with applicable codes and standards. In addition, they will ensure that:

- procedures are established for EPM intervals, inspections, tests, and servicing requirements;
- records are maintained of all tests, inspections, servicing, and inventories;
- documentation, tests, test intervals, and procedures are guided by the recommendations of NFPA 7013, manufacturer's recommendations, industry standards, or DOE-adopted standards or regulations;
- copies of all manufacturer's installation, operating, and maintenance instructions are maintained in a department file; and
- EPM work is performed only by qualified personnel.

5.6 CODE COMPLIANCE

Performance Objective:

Ensure compliance with all applicable electrical requirements of DOE Orders, the NFPA, ANSI C2, and the respective parts of 29 CFR 1910 and 29 CFR 1926.

All electrical installations and equipment are subject to inspection and the approval of the AHJ.

5.6.1 CODE AND REGULATION INSPECTORS

Inspectors representing the AHJ will be qualified as required by the AHJ in:

- National Electrical Code (NFPA 70); 29 CFR 1910, Subpart S; and
- 29 CFR 1926, Subparts K and V.

Managers will ensure that adequate resources are available to provide for compliance with applicable codes and standards. In addition, they will ensure that:

Inspections are performed by qualified personnel on all new electrical work and equipment, including utilization equipment. These inspections will be in accordance with 29 CFR 1910, Subpart S.

Any potential imminent danger situation is corrected immediately or personnel is removed from the hazard.

Resources are available to abate all true electrically hazardous conditions.

Inspections are documented. Inspection records, deficiencies, and corrective actions will be maintained in a department file.

Examinations are performed on all equipment that is not listed or labeled by a NRTL.

Record drawings of all electrical systems and equipment are maintained and a rigid system exists for recording changes and correcting the drawings to reflect those changes.

5.6.2 AUTHORITY HAVING JURISDICTION (AHJ)

The ESC is the AHJ for interpreting electrical codes, standards, and regulations.

5.6.3 EXEMPTION AND WAIVERS

All requests for code and regulation exemptions and waivers will first be submitted to the ESC for action.

Requests for exemptions and waivers will include:

- a description of the problem and the reason for requesting noncompliance; code or regulation references;
- proposed mitigative steps to be taken such as warning signs, barriers, and procedures to
- provide equivalent protection; and
- proposed dates for the variance.

Normally, exemptions and waivers are not granted for 1) longer than 180 days, 2) the time it takes to correct the deficiency, or 3) the duration of an approved program or operation. (See Section 4.0, Definitions). Exemptions and waivers are granted by the DOE Assistant Secretary for Environment, Safety, and Health in accordance with DOE Document DOE/ID-10600.

5.6.4 EQUIPMENT AND MATERIALS APPROVAL

All electrical equipment and materials for facility wiring, and similar R&D wiring, as defined by NFPA 70 will be approved in accordance with Article 90-7, "Examination of Equipment for Safety," and Article 110-3, "Examination, Identification, Installation, and Use of Equipment."

5.6.5 UTILIZATION EQUIPMENT

Utilization equipment is addressed in 29 CFR 1910.302 and 303. This document makes it clear that utilization equipment is subject to the same approval and acceptance requirements as in Section 5.6.4 of this document.

- To be acceptable for installation and use, utilization equipment will be listed or labeled by a NRTL.
- Utilization equipment that is not listed or labeled will meet one of the requirements of 29 CFR 1910.399, Acceptable, (i)(ii), or (iii).
- Utilization equipment that is not listed or labeled will be examined, accepted, and documented by a qualified person.
- Utilization equipment must be used in accordance with its listing and labeling requirements.

  NOTE: Utilization equipment includes laboratory and shop equipment, appliances, or other devices that operate from an electrical energy source.

5.6.6 TEST INSTRUMENTS AND EQUIPMENT

Test instruments and equipment are intended only for use by qualified personnel and shall be used in accordance with 29 CFR 1910.334(c). In addition, a qualified person will inspect all test instruments and equipment to ensure that it is safe to use as intended by the manufacturer. If found unsafe, they will not be used unless warning labels, special operating procedures, or modifications are used to mitigate the hazard.

- Test instruments and equipment will be visually inspected before each use.
- Test instruments and equipment and their accessories shall be electrically rated for their intended use.

5.6.7 EQUIPMENT OF FOREIGN MANUFACTURE

All equipment of foreign manufacture is subject to acceptance as defined in 29 CFR 1910.399. Listing and labeling of equipment by foreign laboratories or standards may require examination to ensure that the equipment is wired to the electrical requirements of NFPA 70 as well as 29 CFR 1910.334.

5.6.8 APPLIANCES FOR PERSONAL USE

All appliances for personal use in the workplace such as coffee pots, refrigerators, and radios should be listed and exhibit the label of a NRTL.

5.6.9 QUALIFIED EXAMINERS OF RESEARCH AND DEVELOPMENT (R&D) EQUIPMENT

R&D managers may appoint at least one person in their organization to examine equipment and materials for approval prior to use. This person(s) will be knowledgeable in specified code and regulation requirements for examination and with the NRTL process. This person will contact an electrical safety staff member for guidance in examination procedures.

NOTE: If an organization does not have a qualified person, an electrical safety staff member should be contacted for assistance.

5.7 ENGINEERING AND INSPECTION

Performance objective:

Provide electrical safety engineering and inspection resources to ensure that this Electrical Safety Program and all mandatory codes and regulations are implemented.

5.7.1 R&D AND FACILITY REQUIREMENTS

R&D and facility organizations will ensure that their electrical systems are constructed and maintained in compliance with the electrical safety criteria.

5.7.2 CERTIFIED ELECTRICAL INSPECTORS

Certified (AHJ-approved certification) electrical code inspectors will be provided for construction and maintenance work.

Inspectors

Inspectors will have an AHJ-approved certification in the National Electrical Code and will be qualified in the electrical safety requirements of 29 CFR 1910 and 29 CFR 1926. In addition, inspectors will

- have the responsibility of inspecting electrical work performed during both maintenance projects and construction projects;
- provide documentation of electrical inspections of both maintenance projects and construction projects;
- participate in the quality assurance QA process and QA review process;
  provide an inspection resource for all organizations;
- participate in the QA programs of other organizations as required, and
- review and sign off on safe operating procedures with electrical requirements.

5.7.3 QUALIFIED PERSONNEL

All persons performing electrical work will be qualified in accordance with the requirements of 29 CFR 1910.331 through 335. Electrical work will be performed by qualified personnel as follows.

Connection to and operation of circuit breakers in building electrical panels may be performed only by qualified electricians.

NOTE: In an emergency, a knowledgeable employee may operate a circuit breaker in a building only to disconnect power

- Power cords and plugs, rated 15 or 20 A, provided with electrical equipment and intended to be installed by the user, will be installed by a qualified person. The manufacturer's instructions will be followed explicitly. A polarity and ground continuity test will be performed on the cord and plug set before inserting the plug into a receptacle.

- All other electrical work will be performed by qualified electronic technicians and electricians.

5.7.4 QUALITY ASSURANCE (QA)

Qualified personnel will participate in the QA process and provide design input and oversight as follows.

- Review electrical plans for all new, or modifications to, facilities and R&D projects.

- Review safe operating procedures for Electrical Safety Program compliance.

- Periodically inspect wiring materials, connections, and components of existing facilities and R&D projects.

- Review drawings, specifications, and manufacturer's installation operation instructions for all electrical equipment prior to connection and operations

5.7.5 ELECTRICAL OCCURRENCE REPORTS

Electrical occurrences, including electrical shocks, shall be reported in accordance with DOE Order 5000.3A.

6. REFERENCES

6.1 IMPLEMENTING REFERENCES

29 CFR 1910, Subpart S, and 29 CFR 1926, Subparts K and V.

DOE Electrical Safety Guidelines, DOE/ID 10600.

Electrical Safety Criteria for Research and Development Activities, DOE/EV-0051/1, Interim Criteria.

Electrical Safety Task Force Report. Factory Mutual Approval Guide.

Factory Mutual Data Sheets.

General Design Criteria, DOE Order 6430. IA.

International Association of Electrical Inspectors, Inc. (IAEI).

International Congress of Building Officials (ICBO).

Institute of Electronic and Electrical Engineers (IEEE).

National Electrical Code, National Fire Protection Association 70.

National Electrical Safety Code, American National Standards Institute standard C2.

National Fire Codes, National Fire Protection Association (NFPA). (Refer to Section 6.3.)

Standard for Fire Protection of DOE Electronic Computer/Data Processing Systems, DOE/EP0108.

Underwriters Laboratories, Inc., Listings and Classifications Directory. Uniform Building Code. latest edition and supplements.

Uniform Fire Code, latest edition and supplements.

Williams- Steiger Occupational Safety and Health Act of 1970, standards:

- Occupational Safety and Health Standards, 29 CFR 1910, General Industry Standards.
- Safety and Health Regulations for Construction, 29 CFR 1926.

6.2 DEVELOPMENTAL REFERENCES

Conduct of Operations Requirements for DOE Facilities, DOE Order 5480.19.

Environmental Protection, Safety, and Health Protection Information Reporting Requirements, DOE Order 5484.1.

Environmental Protection, Safety, and Health Protection Standards, DOE Order 5480.4. Fire Protection, DOE Order 5480.7.

General Design Criteria, DOE Order 6430. IA.

General Operations Quality Assurance, Revision II, DOE/AL Order 5700.613. Occurrence Reporting and Processing of Operations Information, DOE Order 5000.3A. Maintenance Management Program, DOE Order 4330.4A.

Maintenance Management Program Guidance, DOE/AL 4330.4A.

Protection of Electronic Computers and Data Procession Equipment, DOE/EP-0108. Safety Analysis and Review, DOE Order 5481.1 B.

6.3 NFPA REFERENCES WITH ELECTRICAL REQUIREMENTS

Volume 1

1 Fire Prevention Code

20 Standard for the Installation of Centrifugal Fire Pumps

30 Flammable and Combustible Liquids Code

30A Automotive and Marine Service Station Code

Volume 2

33 Standard for Spray Application Using Flammable and Combustible Liquids

34 Standard for Dipping and Coating Processes Using Flammable or Combustible Liquids

45 Standard on Fire Protection for Laboratories Using Chemicals

50 Standard for Bulk Oxygen Systems at Consumer Sites

50A Standard for Gaseous Hydrogen Systems at Consumer Sites

50B Standard for Liquefied Hydrogen Systems at Consumer Sites

54 National Fuel Gas Code

58 Standard for the Storage and Handling of Liquefied Petroleum Gases

69 Standard on Explosion Prevention Systems

Volume 3

70 National Electrical Code (NEC)

70B Electrical Equipment Maintenance

70E Standard for Electrical Safety Requirements for Employee Work Places

72A Standard for the Installation, Maintenance, and Use of Local Protective Signaling Systems for Guard's Tour, Fire Alarm, and Supervisory Service

72B Standard for the Installation, Maintenance, and Use of Proprietary Protective Signaling Systems

72E Standard on Automatic Fire Detectors

72F StandardfortheInstallation,Maintenance,andUseofEmergencyVoice/Alarm Communication Systems

75 Standard for the Protection of Electronic Computer/Data Processing Equipment 78 Lightning Protection Code

79 Electrical Standard for Industrial Machinery

Volume 4

88B Standard for Repair Garages

90A Standard for the Installation of Air Conditioning and Ventilation Systems

90B Standard for the Installation of Warm Air Heating and Air Conditioning Systems

91 Standard for the Installation of Blower and Exhaust systems

96 Standard for the Installation of Equipment for the Removal of Smoke and Grease-Laden Vapors from Commercial Cooking Equipment

Volume 5

99 Standard for Health Care Facilities

99B Standard for Hypobaric Facilities

101 Code for Safety to Life from Fire in Buildings and Structures (the Life Safety Code)

102 Standard for Assembly Seating, Tents, and Membrane Structures

110 Standard for Emergency and Standby Power Systems

Volume 6

122 Standard for the Storage of Flammable and Combustible Liquids Within Underground Metal and Nonmetal Mines (Other than Coal)

220 Standard on Types of Building Construction

241 Standard for Safeguarding Construction, Alteration, and Demolition Operations

318 Standard for the Protection of Clean Rooms

321 Standard on Basic Classification of Flammable and Combustible Liquids

385 Standard for Tank Vehicles for Flammable and Combustible Liquids

Volume 7

407 Standard for Aircraft Fueling Servicing

493 Standard for Intrinsically Safe Apparatus and Associated Apparatus for use in Class I, II, and III, Division 1 Hazardous Locations [Discontinued see Underwriters' Laboratories, Inc. (UL), UL913, Intrinsically Safe Apparatus and Associated Apparatus for Use in Class I, II and III, Division 1, Hazardous Locations]

495 Code for the Manufacture, Transportation, Storage, and Use of Explosive Materials

496 Standard for Purges and Pressurized Enclosures for Electrical Equipment

498 Standard for Explosives Motor Vehicle Terminals

704 Standard Systems for the Identification of the Fire Hazards of Materials

Volume 8

1141 Standard for Fire Protection in Planned Building Groups

1221 Standard for the Installation, Maintenance, and Use of Public Fire Service Communication Systems

Volume 9

68 Guide for Explosion Venting

70B Recommended Practices for Electrical Equipment Maintenance

72G Guide for the Installation, Maintenance, and Use of Notification Appliances for Protective Signaling Systems

72H Guide for Testing Procedures forLocal, Auxiliary, Remote Station, and Proprietary Signaling Systems

77 Recommended Practices on Static Electricity

80A Recommended Practice for Protection of Buildings from Exterior Fire Exposure

97M Standard Glossary of Terms Relating to Chimneys, Vents, and Heat-Producing Appliances

Volume 10

325M Fire Hazard Properties of Flammable Liquids, Gases, and Volatile Materials

328 Recommended Practices for the Control of Flammable and Combustible Liquids and Gases in Manholes and Sewers

Volume 11

497A Recommended Practice for Classification of Class I Hazardous (Classified) Locations for Electrical Installations in Chemical Process Areas

497M Manual for Classification of Gases, Vapors, and Dust for Electrical Equipment in Hazardous (Classified) Locations

802 Recommended Fire Protection Practice for Nuclear Research Reactors

901 Uniform Coding for Fire Protection

907M Manual on the Investigation of Fires of Electrical Origin

CHARTER OF THE ELECTRICAL SAFETY COMMITTEE (ESC)

I. PURPOSE, OBJECTIVES, AND RESPONSIBILITIES

A. Provide the contractor or company with a competent technical resource for identifying, recommending resolution of, and communicating electrical safety issues.

B. Enhance electrical safety by reducing risk, mitigating hazards, and providing root cause analysis in electrical energy distribution and applications in R&D laboratories and other workplaces.

C. Identify the need for and establish new electrical safety initiatives and programs.

D. Develop, review, and approve electrical safety training programs.

E. Review all occurrence reports involving electrical issues, and participate in the root cause analysis process.

F. Participate in DOE electrical safety programs such as the DOE ESC, the development and maintenance of the DOE Electrical Safety Guidelines document, and the process for requesting and monitoring exemptions and waivers to guidelines.

G. The committee shall be responsible for implementation of this program.

II. MEMBERSHIP

A. Site management appoints the chair of the ESC and approves the charter.

B. The chair shall appoint a secretary.

C. The committee shall be made up of one member and an alternate appointed by each line organization or division and appropriate trades organization(s).

D. Advisors to the ESC shall attend and participate in committee meetings and activities. Advisors shall be line organization personnel who have special interests and/or knowledge concerning electrical safety. Advisors shall be approved by the committee.

E. The DOE area or field office appoints a representative to the ESC to coordinate electrical safety concerns involving the ESC and DOE.

F. Committee members shall be knowledgeable in electrical safety through education and/or experience and shall be actively pursuing electrical engineering, electrical safety, or R&D functions in the performance of their duties and shall be committed to the broad electrical safety concerns of the site and its employees.

III. COMMITTEE AUTHORITY

The ESC shall be the authority having jurisdiction (AHJ) for the implementation of the National Electrical Code, 29 CFR 1910, Subpart S, and 29 CFR 1926, Subpart K.

IV. OPERATIONAL GUIDELINES

A. The committee shall meet at least quarterly, and the meeting shall be called by the chair or by the secretary in the absence of the chair.

B. ESC bulletins and all revisions to the Electrical Safety Manual will be reviewed by the ESC.

C. Subcommittees to address particular areas of electrical safety may be formed at the direction of the chair, by vote of the committee, or by a voting member with the concurrence of the chair or committee. At least one ESC member shall serve on each subcommittee.

D. Designated alternate members shall vote in the absence of members and shall provide consultation and advice to individual members or the whole committee, as requested.

E. The chair shall appoint someone to serve as the chair in the chair's absence.

F. The secretary shall record and distribute ESC meeting minutes.

V. MANAGEMENT REVIEW

Conduct of the meetings and any resulting recommendations (with supporting documentation) will be communicated to ES&H management through the meeting minutes.

APPENDIX B ACRONYMS AND DEFINITIONS

B.1 ACRONYMS

ac	alternating current
AHJ	Authority Having Jurisdiction
ANSI	American National Standards Institute
ASME	American Society of Mechanical Engineers
ASTM	American Society for Testing and Materials
CB	circuit breaker
CFR	Code of Federal Regulations
CMAA	Crane Manufacturers Association of America
CPR	Cardiopulmonary resuscitation
CT	current transformer
dc	direct current
DOD	Department of Defense
DOE	Department of Energy
DOL	Department of Labor
ECC	Emergency Control Center
EED	electroexplosive device
EGC	equipment grounding conductors
EMR	electromagnetic radiation
ESC	Electrical Safety Committee
ES&H	Environmental Safety & Health
EPM	electrical preventive maintenance
FLC	Full Load Current
FMEC	Factory Mutual Engineering Corporation
FPN	Fine Print Note

GEC	grounding electrode conductor
GFCI	ground-fault circuit interrupter
GFP	ground-fault protection
IEEE	Institute of Electrical and Electronic Engineers
IEC	International Electrotechnical Commission
IES	Illumination Engineering Society of North America
ISA	Instrument Society of America
J	Joule
kV	kilovolts
mA	milliamps
MOV	metal oxide varistor
MPE	maximum permissible exposure
NEC	National Electrical Code
NEMA	National Electrical Manufacturers Association
NESC	National Electrical Safety Code
NFPA	National Fire Protection Association
NIST	National Institute of Standards and Technology
NRTL	Nationally Recognized Testing Laboratory
OCPD	Overcurrent Protection Device
OSHA	Occupation Safety and Health Administration PCB polychlorinated biphenyl
PIC	person in charge
R&D	Research and Development
RF	radio frequency
RFMW	Radio Frequency Microwave
UBC	Uniform Building Code
UFAS	Uniform Federal Accessibility Standard

UL Underwriters Laboratory, Inc.

B.2 DEFINITIONS

DEFINITIONS APPLICABLE TO 29 CFR 1910 SUBPART S

Acceptable—An installation or equipment is acceptable to the Assistant Secretary of Labor, and approved within the meaning of this Subpart S:

i. If it is accepted, or certified, or listed, or labeled, or otherwise determined to be safe by a nationally recognized testing laboratory; or

ii. With respect to an installation or equipment of a kind which no nationally recognized testing laboratory accepts, certifies, lists, labels, or determines to be safe, if it is inspected or tested by another Federal agency, or by a State, municipal, or other local authority responsible for enforcing occupational safety provisions of the National Electrical Code, and found in compliance with the provisions of the National Electrical Code as applied in this subpart; or

iii. With respect to custom-made equipment or related installations which are designed, fabricated for, and intended for use by a particular customer, if it is determined to be safe for its intended use by its manufacturer on the basis of test data which the employer keeps and makes available for inspection to the Assistant Secretary and his authorized representatives. Refer to 1910.7 for definition of nationally recognized testing laboratory.

Accepted—An installation is "accepted" if it has been inspected and found by a nationally recognized testing laboratory to conform to specified plans or to procedures of applicable codes.

Accessible—(As applied to wiring methods.) Capable of being removed or exposed without damaging the building structure or finish, or not permanently closed in by the structure or finish of the building. (See "concealed" and "exposed.")

Accessible—(As applied to equipment.) Admitting close approach; not guarded by locked doors, elevation, or other effective means. (See "Readily accessible.")

Ampacity—Current-carrying capacity of electric conductors expressed in amperes.

Appliances—Utilization equipment, generally other than industrial, normally built in standardized sizes or types, which is installed or connected as a unit to perform one or more functions such as clothes washing, air conditioning, food mixing, deep frying, etc.

Approved—Acceptable to the authority enforcing this subpart. The authority enforcing this subpart is the Assistant Secretary of Labor for Occupational Safety and Health. The definition of "acceptable" indicates what is acceptable to the Assistant Secretary of Labor, and therefore approved within the meaning of this Subpart.

Approved for the purpose—Approved for a specific purpose, environment, or application described in a particular standard requirement. Suitability of equipment or materials for a specific purpose, environment or application may be determined by a nationally recognized

testing laboratory, inspection agency or other organization concerned with product evaluation as part of its listing and labeling program. (See "Labeled" or "Listed.")

Armored cable—Type AC armored cable is a fabricated assembly of insulated conductors in a flexible metallic enclosure.

Askarel—A generic term for a group of nonflammable synthetic chlorinated hydrocarbons used as electrical insulating media. Askarels of various compositional types are used. Under arcing conditions the gases produced, while consisting predominantly of noncombustible hydrogen chloride, can include varying amounts of combustible gases depending upon the askarel type.

Attachment plug (Plug cap)(Cap)—A device which, by insertion in a receptacle, establishes connection between the conductors of the attached flexible cord and the conductors connected permanently to the receptacle.

Automatic—Self-acting, operating by its own mechanism when actuated by some impersonal influence, as, for example, a change in current strength, pressure, temperature, or mechanical configuration.

Bare conductor—See "Conductor."

Bonding—The permanent joining of metallic parts to form an electrically conductive path which will assure electrical continuity and the capacity to conduct safely any current likely to be imposed.

Bonding jumper—A reliable conductor to assure the required electrical conductivity between metal parts required to be electrically connected.

Branch circuit—The circuit conductors between the final overcurrent device protecting the circuit and the outlet(s).

Building—A structure which stands alone or which is cut off from adjoining structures by fire walls with all openings therein protected by approved fire doors.

Cabinet—An enclosure designed either for surface or flush mounting, and provided with a frame, mat, or trim in which a swinging door or doors are or may be hung.

Cable tray system—A cable tray system is a unit or assembly of units or sections, and associated fittings, made of metal or other noncombustible materials forming a rigid structural system used to support cables. Cable tray systems include ladders, troughs, channels, solid bottom trays, and other similar structures.

Cablebus—Cablebus is an approved assembly of insulated conductors with fittings and conductor terminations in a completely enclosed, ventilated, protective metal housing.

Center pivot irrigation machine—A center pivot irrigation machine is a multi-motored irrigation machine which revolves around a central pivot and employs alignment switches or similar devices to control individual motors.

Certified—Equipment is "certified" if it (a) has been tested and found by a nationally recognized testing laboratory to meet nationally recognized standards or to be safe for use in a specified

manner, or (b) is of a kind whose production is periodically inspected by a nationally recognized testing laboratory, and (c) it bears a label, tag, or other record of certification.

Circuit breaker—

i. (600 volts nominal, or less). A device designed to open and close a circuit by nonautomatic means and to open the circuit automatically on a predetermined overcurrent without injury to itself when properly applied within its rating.

ii. (Over 600 volts, nominal). A switching device capable of making, carrying, and breaking currents under normal circuit conditions, and also making, carrying for a specified time, and breaking currents under specified abnormal circuit conditions, such as those of short circuit.

Class I locations—Class I locations are those in which flammable gases or vapors are or may be present in the air in quantities sufficient to produce explosive or ignitable mixtures. Class I locations include the following:

i. *Class I, Division I.* A Class I, Division I location is a location:

1. in which hazardous concentrations of flammable gases or vapors may exist under normal operating conditions; or

2. in which hazardous concentrations of such gases or vapors may exist frequently because of repair or maintenance operations or because of leakage; or © in which breakdown or faulty operation of equipment or processes might release hazardous concentrations of flammable gases or vapors, and might also cause simultaneous failure of electric equipment.

NOTE: This classification usually includes locations where volatile flammable liquids or liquefied flammable gases are transferred from one container to another; interiors of spray booths and areas in the vicinity of spraying and painting operations where volatile flammable solvents are used; locations containing open tanks or vats of volatile flammable liquids; drying rooms or compartments for the evaporation of flammable solvents; locations containing fat and oil extraction equipment using volatile flammable solvents; portions of cleaning and dyeing plants where flammable liquids are used; gas generator rooms and other portions of gas manufacturing plants where flammable gas may escape; inadequately ventilated pump rooms for flammable gas or for volatile flammable liquids; the interiors of refrigerators and freezers in which volatile flammable materials are stored in open, lightly stoppered, or easily ruptured containers; and all other locations where ignitable concentrations of flammable vapors or gases are likely to occur in the course of normal operations.

ii. *Class I, Division 2.* A Class I, Division 2 location is a location:

a. in which volatile flammable liquids or flammable gases are handled, processed, or used, but in which the hazardous liquids, vapors, or gases will normally be confined within closed containers or closed systems from which they can escape only in case of accidental rupture or breakdown of such containers or systems, or in case of abnormal operation of equipment; or

b. in which hazardous concentrations of gases or vapors are normally prevented by positive mechanical ventilation, and which might become hazardous through failure or abnormal operations of the ventilating equipment; or

c. that is adjacent to a Class 1, Division 1 location, and to which hazardous concentrations of gases or vapors might occasionally be communicated unless such communication is prevented by adequate positive-pressure ventilation from a source of clean air, and effective safeguards against ventilation failure are provided.

NOTE: This classification usually includes locations where volatile flammable liquids or flammable gases or vapors are used, but which would become hazardous only in case of an accident or of some unusual operating condition. The quantity of flammable material that might escape in case of accident, the adequacy of ventilating equipment, the total area involved, and the record of the industry or business with respect to explosions or fires are all factors that merit consideration in determining the classification and extent of each location.

Piping without valves, checks, meters, and similar devices would not ordinarily introduce a hazardous condition even though used for flammable liquids or gases. Locations used for the storage of flammable liquids or a liquefied or compressed gases in sealed containers would not normally be considered hazardous unless also subject to other hazardous conditions.

Electrical conduits and their associated enclosures separated from process fluids by a single seal or barrier are classed as a Division 2 location if the outside of the conduit and enclosures is a nonhazardous location.

Class II locations—Class II locations are those that are hazardous because of the presence of combustible dust. Class II locations include the following:

i. *Class II, Division 1*. A Class II, Division 1 location is a location:

a. In which combustible dust is or may be in suspension in the air under normal operating conditions, in quantities sufficient to produce explosive or ignitable mixtures; or

b. where mechanical failure or abnormal operation of machinery or equipment might cause such explosive or ignitable mixtures to be produced, and might also provide a source of ignition through simultaneous failure of electric equipment, operation of protection devices, or from other causes, or

c. in which combustible dusts of an electrically conductive nature may be present.

NOTE: This classification may include areas of grain handling and processing plants, starch plants, sugar-pulverizing plants, malting plants, hay-grinding plants, coal pulverizing plants, areas where metal dusts and powders are produced or processed, and other similar locations which contain dust producing machinery and equipment (except where the equipment is dust-tight or vented to the outside). These areas would have combustible dust in the air, under normal operating conditions, in quantities sufficient to produce explosive or ignitable mixtures. Combustible dusts which are electrically nonconductive include dusts produced in the handling and processing of grain and grain products, pulverized sugar and cocoa, dried egg and milk powders, pulverized spices, starch and pastes, potato and woodflour, oil meal from beans and seed, dried hay, and other organic materials which may

produce combustible dusts when processed or handled. Dusts containing magnesium or aluminum are particularly hazardous and the use of extreme caution is necessary to avoid ignition and explosion.

ii. *Class II, Division 2*. A Class II, Division 2 location is a location in which:

a. combustible dust will not normally be in suspension in the air in quantities sufficient to produce explosive or ignitable mixtures, and dust accumulations are normally insufficient to interfere with the normal operation of electrical equipment or other apparatus; or

b. dust may be in suspension in the air as a result of infrequent malfunctioning of handling or processing equipment, and dust accumulations resulting therefrom may be ignitable by abnormal operation or failure of electrical equipment or other apparatus.

NOTE: This classification includes locations where dangerous concentrations of suspended dust would not be likely but where dust accumulations might form on or in the vicinity of electric equipment. These areas may contain equipment from which appreciable quantities of dust would escape under abnormal operating conditions or be adjacent to a Class II Division 1 location, as described above, into which an explosive or ignitable concentration of dust may be put into suspension under abnormal operating conditions.

Class III locations—Class III locations are those that are hazardous because of the presence of easily ignitable fibers or flyings but in which such fibers or flyings are not likely to be in suspension in the air in quantities sufficient to produce ignitable mixtures. Class III locations include the following:

i. *Class III, Division 1.* A Class III, Division I location is a location in which easily ignitable fibers or materials producing combustible flyings are handled, manufactured, or used.

NOTE: Such locations usually include some parts of rayon, cotton, and other textile mills; combustible fiber manufacturing and processing plants; cotton gins and cotton-seed mills; flax-processing plants; clothing manufacturing plants; woodworking plants, and establishments; and industries involving similar hazardous processes or conditions.

Easily ignitable fibers and flyings include rayon, cotton (including cotton linters and cotton waste), sisal or henequen, istle, jute, hemp, tow, cocoa fiber, oakum, baled waste kapok, Spanish moss, excelsior, and other materials of similar nature.

ii. *Class III, Division 2.* A Class III, Division 2 location is a location in which easily ignitable fibers are stored or handled, except in process of manufacture.

Collector ring—A collector ring is an assembly of slip rings for transferring electrical energy from a stationary to a rotating member.

Concealed—Rendered inaccessible by the structure or finish of the building. Wires in concealed raceways are considered concealed, even though they may become accessible by withdrawing them. [See "Accessible. (As applied to wiring methods.)"]

Conductor—

i. *Bare*—A conductor having no covering or electrical insulation whatsoever.

ii. *Covered*—A conductor encased within material of composition or thickness that is not recognized as electrical insulation.

iii. *Insulated*—A conductor encased within material of composition and thickness that is recognized as electrical insulation.

Conduit body—A separate portion of a conduit or tubing system that provides access through a removable cover(s) to the interior of the system at a junction of two or more sections of the system or at a terminal point of the system. Boxes such as FS and FD or larger cast or sheet metal boxes are not classified as conduit bodies.

Controller—A device or group of devices that serves to govern, in some predetermined manner, the electric power delivered to the apparatus to which it is connected.

Cooking unit, counter-mounted—A cooking appliance designed for mounting in or on a counter and consisting of one or more heating elements, internal wiring, and built-in or separately mountable controls. (See "Oven, wall-mounted.")

Covered conductor—See "Conductor."

Cutout—(Over 600 volts, nominal.) An assembly of a fuse support with either a fuseholder, fuse carrier, or disconnecting blade. The fuseholder or fuse carrier may include a conducting element (fuse link), or may act as the disconnecting blade by the inclusion of a nonfusible member.

Cutout box—An enclosure designed for surface mounting and having swinging doors or covers secured directly to and telescoping with the walls of the box proper. (See "Cabinet.")

Damp location—See "Location."

Dead front—Without live parts exposed to a person on the operating side of the equipment.

Device—A unit of an electrical system which is intended to carry but not utilize electric energy.

Dielectric heating—Dielectric heating is the heating of a nominally insulating material due to its own dielectric losses when the material is placed in a varying electric field.

Disconnecting means—A device, or group of devices, or other means by which the conductors of a circuit can be disconnected from their source of supply.

Disconnecting (or Isolating) switch—(Over 600 volts, nominal.) A mechanical switching device used for isolating a circuit or equipment from a source of power.

Dry location—See "Location."

Electric sign—A fixed, stationary, or portable self—contained, electrically illuminated utilization equipment with words or symbols designed to convey information or attract attention.

Enclosed—Surrounded by a case, housing, fence or walls which will prevent persons from accidentally contacting energized parts.

Enclosure—The case or housing of apparatus, or the fence or walls surrounding an installation to prevent personnel from accidentally contacting energized parts, or to protect the equipment from physical damage.

Equipment—A general term including material, fittings, devices, appliances, fixtures, apparatus, and the like, used as a part of, or in connection with, an electrical installation.

Equipment grounding conductor—See "Grounding conductor, equipment."

Explosion-proof apparatus—Apparatus enclosed in a case that is capable of withstanding an explosion of a specified gas or vapor which may occur within it and of preventing the ignition of a specified gas or vapor surrounding the enclosure by sparks, flashes, or explosion of the gas or vapor within, and which operates at such an external temperature that it will not ignite a surrounding flammable atmosphere.

Exposed—(As applied to live parts.) Capable of being inadvertently touched or approached nearer than a safe distance by a person. It is applied to parts not suitably guarded, isolated, or insulated. (See "Accessible." and "Concealed.")

Exposed—(As applied to wiring methods.) On or attached to the surface or behind panels designed to allow access. [See "Accessible. (As applied to wiring methods.)"]

Exposed—(For the purposes of 1910.308(e), Communications systems.) Where the circuit is in such a position that in case of failure of supports or insulation, contact with another circuit may result.

Externally operable—Capable of being operated without exposing the operator to contact with live parts.

Feeder—All circuit conductors between the service equipment, or the generator switchboard of an isolated plant, and the final branch—circuit overcurrent device.

Fitting—An accessory such as a locknut, bushing, or other part of a wiring system that is intended primarily to perform a mechanical rather than an electrical function.

Fuse—(Over 600 volts, nominal.) An overcurrent protective device with a circuit opening fusible part that is heated and severed by the passage of overcurrent through it. A fuse comprises all the parts that form a unit capable of performing the prescribed functions. It may or may not be the complete device necessary to connect it into an electrical circuit.

Ground—A conducting connection, whether intentional or accidental, between an electrical circuit or equipment and the earth, or to some conducting body that serves in place of the earth.

Grounded—Connected to earth or to some conducting body that serves in place of the earth.

Grounded, effectively—(Over 600 volts, nominal.) Permanently connected to earth through a ground connection of sufficiently low impedance and having sufficient ampacity that ground fault current which may occur cannot build up to voltages dangerous to personnel.

Grounded conductor—A system or circuit conductor that is intentionally grounded.

Grounding conductor—A conductor used to connect equipment or the grounded circuit of a wiring system to a grounding electrode or electrodes.

Grounding conductor, equipment—The conductor used to connect the non-current-carrying metal parts of equipment, raceways, and other enclosures to the system grounded conductor and/or the grounding electrode conductor at the service equipment or at the source of a separately derived system.

Grounding electrode conductor—The conductor used to connect the grounding electrode to the equipment grounding conductor and/or to the grounded conductor of the circuit at the service equipment or at the source of a separately derived system.

Ground fault circuit interrupter—A device whose function is to interrupt the electric circuit to the load when a fault current to ground exceeds some predetermined value that is less than that required to operate the overcurrent protective device of the supply circuit.

Guarded—Covered, shielded, fenced, enclosed, or otherwise protected by means of suitable covers, casings, barriers, rails, screens, mats, or platforms to remove the likelihood of approach to a point of danger or contact by persons or objects.

Health care facilities—Buildings or portions of buildings and mobile homes that contain, but are not limited to, hospitals, nursing homes, extended care facilities, clinics, and medical and dental offices, whether fixed or mobile.

Heating equipment—For the purposes of 1910.306(g), the term "heating equipment" includes any equipment used for heating purposes if heat is generated by induction or dielectric methods.

Hoistway—Any shaftway, hatchway, well hole, or other vertical opening or space in which an elevator or dumbwaiter is designed to operate.

Identified—Identified, as used in reference to a conductor or its terminal, means that such conductor or terminal can be readily recognized as grounded.

Induction heating—Induction heating is the heating of a nominally conductive material due to its own I 2 R losses when the material is placed in a varying electromagnetic field.

Insulated conductor—See "Conductor."

Interrupter switch—(Over 600 volts, nominal.) A switch capable of making, carrying, and interrupting specified currents.

Irrigation machine—An irrigation machine is an electrically driven or controlled machine, with one or more motors, not hand portable, and used primarily to transport and distribute water for agricultural purposes.

Isolated—Not readily accessible to persons unless special means for access are used.

Isolated power system—A system comprising an isolating transformer or it equivalent, a line isolation monitor, and its ungrounded circuit conductors.

Labeled—Equipment is "labeled" if there is attached to it a label, symbol, or other identifying mark of a nationally recognized testing laboratory which,

a. makes periodic inspections of the production of such equipment, and

b. whose labeling indicates compliance with nationally recognized standards or tests to determine safe use in a specified manner.

Lighting outlet—An outlet intended for the direct connection of a lampholder, a lighting fixture, or a pendant cord terminating in a lampholder.

Line-clearance tree trimming—The pruning, trimming, repairing, maintaining, removing, or clearing of trees or cutting of brush that is within 10 feet (305 cm) of electric supply lines and equipment.

Listed—Equipment is "listed" if it is of a kind mentioned in a list which,

a. is published by a nationally recognized laboratory which makes periodic inspection of the production of such equipment, and

b. states such equipment meets nationally recognized standards or has been tested and found safe for use in a specified manner.

Location—

i. *Damp location*—Partially protected locations under canopies, marquees, roofed open porches, and like locations, and interior locations subject to moderate degrees of moisture, such as some basements, some barns, and some cold—storage warehouses.

ii. *Dry location*—A location not normally subject to dampness or wetness. A location classified as dry may be temporarily subject to dampness or wetness, as in the case of a building under construction.

iii. *Wet location*—Installations underground or in concrete slabs or masonry in direct contact with the earth, and locations subject to saturation with water or other liquids, such as vehicle—washing areas, and locations exposed to weather and unprotected.

May—If a discretionary right, privilege, or power is abridged or if an obligation to abstain from acting is imposed, the word "may" is used with a restrictive “no” “not," or "only." (e.g., no employer may ...; an employer may not ...; only qualified persons may ...)

Medium voltage cable—Type MV medium voltage cable is a single or multiconductor solid dielectric insulated cable rated 2000 volts or higher.

Metal-clad cable—Type MC cable is a factory assembly of one or more conductors, each individually insulated and enclosed in a metallic sheath of interlocking tape, or a smooth or corrugated tube.

Mineral-insulated metal-sheathed cable—Type MI mineral-insulated metal-sheathed cable is a factory assembly of one or more conductors insulated with a highly compressed refractory mineral insulation and enclosed in a liquidtight and gastight continuous copper sheath.

Mobile X-ray—X-ray equipment mounted on a permanent base with wheels and/or casters for moving while completely assembled.

Nonmetallic-sheathed cable—Nonmetallic-sheathed cable is a factory assembly of two or more insulated conductors having an outer sheath of moisture resistant, flame-retardant, nonmetallic material. Nonmetallic sheathed cable is manufactured in the following types:

i. *Type NM*—The overall covering has a flame-retardant and moisture-resistant finish.

ii. *Type NMC*—The overall covering is flame-retardant, moisture-resistant, fungus-resistant, and corrosion-resistant.

Oil (filled) cutout—(Over 600 volts, nominal.) A cutout in which all or part of the fuse support and its fuse link or disconnecting blade are mounted in oil with complete immersion of the contacts and the fusible portion of the conducting element (fuse link), so that arc interruption by severing of the fuse link or by opening of the contacts will occur under oil.

Open wiring on insulators—Open wiring on insulators is an exposed wiring method using cleats, knobs, tubes, and flexible tubing for the protection and support of single insulated conductors run in or on buildings, and not concealed by the building structure.

Outlet—A point on the wiring system at which current is taken to supply utilization equipment.

Outline lighting—An arrangement of incandescent lamps or electric discharge tubing to outline or call attention to certain features such as the shape of a building or the decoration of a window.

Oven, wall-mounted—An oven for cooking purposes designed for mounting in or on a wall or other surface and consisting of one of more heating elements, internal wiring, and built-in or separately mountable controls. (See "Cooking unit, counter-mounted.")

Overcurrent—Any current in excess of the rated current of equipment or the ampacity of a conductor. It may result from overload (see definition), short circuit, or ground fault. A current in excess of rating may be accommodated by certain equipment and conductors for a given set of conditions. Hence the rules for overcurrent protection are specific for particular situations.

Overload—Operation of equipment in excess of normal, full load rating, or of a conductor in excess of rated ampacity which, when it persists for a sufficient length of time, would cause damage or dangerous overheating. A fault, such as a short circuit or ground fault, is not an overload. (See "Overcurrent.")

Panelboard—A single panel or group of panel units designed for assembly in the form of a single panel; including buses, automatic overcurrent devices, and with or without switches for the control of light, heat, or power circuits; designed to be placed in a cabinet or cutout box placed in or against a wall or partition and accessible only from the front. (See "Switchboard.")

Permanently installed decorative fountains and reflection pools—Those that are constructed in the ground, on the ground or in a building in such a manner that the pool cannot be readily disassembled for storage and are served by electrical circuits of any nature. These units are primarily constructed for their aesthetic value and not intended for swimming or wading.

Permanently installed swimming pools, wading and therapeutic pools—Those that are constructed in the ground, on the ground, or in a building in such a manner that the pool cannot be readily disassembled for storage whether or not served by electrical circuits of any nature.

Portable X-ray—X-ray equipment designed to be hand-carried.

Power and control tray cable—Type TC power and control tray cable is a factory assembly of two or more insulated conductors, with or without associated bare or covered grounding conductors under a nonmetallic sheath, approved for installation in cable trays, in raceways, or where supported by a messenger wire.

Power fuse—(Over 600 volts, nominal.) See "Fuse."

Power-limited tray cable—Type PLTC nonmetallic-sheathed power limited tray cable is a factory assembly of two or more insulated conductors under a nonmetallic jacket.

Power outlet—An enclosed assembly which may include receptacles, circuit breakers, fuseholders, fused switches, buses and watt—hour meter mounting means; intended to supply and control power to mobile homes, recreational vehicles or boats, or to serve as a means for distributing power required to operate mobile or temporarily installed equipment.

Premises wiring system—That interior and exterior wiring, including power, lighting, control, and signal circuit wiring together with all of its associated hardware, fittings, and wiring devices, both permanently and temporarily installed, which extends from the load end of the service drop, or load end of the service lateral conductors to the outlet(s). Such wiring does not include wiring internal to appliances, fixtures, motors, controllers, motor control centers, and similar equipment.

Qualified person—One familiar with the construction and operation of the equipment and the hazards involved.

NOTE 1: Whether an employee is considered to be a "qualified person" will depend upon various circumstances in the workplace. It is possible and, in fact, likely for an individual to be considered qualified" with regard to certain equipment in the workplace, but "unqualified" as to other equipment.(See 1910.332(b)(3) for training requirements that specifically apply to qualified persons.)

NOTE 2: An employee who is undergoing on-the-job training and who, in the course of such training, has demonstrated an ability to perform duties safely at his or her level of training and who is under the direct supervision of a qualified person is considered to be a qualified person for the performance of those duties.

Raceway—A channel designed expressly for holding wires, cables, or busbars, with additional functions as permitted in this subpart. Raceways may be of metal or insulating material, and the term includes rigid metal conduit, rigid nonmetallic conduit, intermediate metal conduit, liquidtight flexible metal conduit, flexible metallic tubing, flexible metal conduit, electrical metallic tubing, underfloor raceways, cellular concrete floor raceways, cellular metal floor raceways, surface raceways, wireways, and busways.

Readily accessible—Capable of being reached quickly for operation, renewal, or inspections, without requiring those to whom ready access is requisite to climb over or remove obstacles or to resort to portable ladders, chairs, etc. (See "Accessible.")

Receptacle—A receptacle is a contact device installed at the outlet for the connection of a single attachment plug. A single receptacle is a single contact device with no other contact device on the same yoke. A multiple receptacle is a single device containing two or more receptacles.

Receptacle outlet—An outlet where one or more receptacles are installed.

Remote-control circuit—Any electric circuit that controls any other circuit through a relay or an equivalent device.

Sealable equipment—Equipment enclosed in a case or cabinet that is provided with a means of sealing or locking so that live parts cannot be made accessible without opening the enclosure. The equipment may or may not be operable without opening the enclosure.

Separately derived system—A premises wiring system whose power is derived from generator, transformer, or converter winding and has no direct electrical connection, including a solidly connected grounded circuit conductor, to supply conductors originating in another system.

Service—The conductors and equipment for delivering energy from the electricity supply system to the wiring system of the premises served.

Service cable—Service conductors made up in the form of a cable.

Service conductors—The supply conductors that extend from the street main or from transformers to the service equipment of the premises supplied.

Service drop—The overhead service conductors from the last pole or other aerial support to and including the splices, if any, connecting to the service—entrance conductors at the building or other structure.

Service-entrance cable—Service-entrance cable is a single conductor or multiconductor assembly provided with or without an overall covering, primarily used for services and of the following types:

i. *Type SE*, having a flame-retardant, moisture-resistant covering, but not required to have inherent protection against mechanical abuse.

ii. *Type USE*, recognized for underground use, having a moisture-resistant covering, but not required to have a flame-retardant covering or inherent protection against mechanical abuse. Single-conductor cables having an insulation specifically approved for the purpose do not require an outer covering.

Service-entrance conductors, overhead system—The service conductors between the terminals of the service equipment and a point usually outside the building, clear of building walls, where joined by tap or splice to the service drop.

Service entrance conductors, underground system—The service conductors between the terminals of the service equipment and the point of connection to the service lateral. Where service equipment is located outside the building walls, there may be no service-entrance conductors, or they may be entirely outside the building.

Service equipment—The necessary equipment, usually consisting of a circuit breaker or switch and fuses, and their accessories, located near the point of entrance of supply conductors to a building or other structure, or an otherwise defined area, and intended to constitute the main control and means of cutoff of the supply.

Service raceway—The raceway that encloses the service-entrance conductors.

Shielded nonmetallic-sheathed cable—Type SNM, shielded nonmetallic-sheathed cable is a factory assembly of two or more insulated conductors in an extruded core of moisture-resistant, flame-resistant nonmetallic material, covered with an overlapping spiral metal tape and wire shield and jacketed with an extruded moisture-, flame-, oil-, corrosion-, fungus-, and sunlight-resistant nonmetallic material.

Show window—Any window used or designed to be used for the display of goods or advertising material, whether it is fully or partly enclosed or entirely open at the rear and whether or not it has a platform raised higher than the street floor level.

Sign—See "Electric Sign."

Signaling circuit—Any electric circuit that energizes signaling equipment.

Special permission—The written consent of the authority having jurisdiction.

Storable swimming or wading pool—A pool with a maximum dimension of 15 feet and a maximum wall height of 3 feet and is so constructed that it may be readily disassembled for storage and reassembled to its original integrity.

Switchboard—A large single panel, frame, or assembly of panels which have switches, buses, instruments, overcurrent and other protective devices mounted on the face or back or both. Switchboards are generally accessible from the rear as well as from the front and are not intended to be installed in cabinets. (See "Panelboard.")

Switches.

General-use switch—A switch intended for use in general distribution and branch circuits. It is rated in amperes, and it is capable of interrupting its rated current at its rated voltage.

General-use snap switch—A form of general-use switch so constructed that it can be installed in flush device boxes or on outlet box covers, or otherwise used in conjunction with wiring systems recognized by this subpart.

Isolating switch—A switch intended for isolating an electric circuit from the source of power. It has no interrupting rating, and it is intended to be operated only after the circuit has been opened by some other means.

Motor-circuit switch—A switch, rated in horsepower, capable of interrupting the maximum operating overload current of a motor of the same horsepower rating as the switch at the rated voltage.

Switching devices—(Over 600 volts, nominal.) Devices designed to close and/or open one or more electric circuits. Included in this category are circuit breakers, cutouts, disconnecting (or isolating) switches, disconnecting means, interrupter switches, and oil (filled) cutouts.

Transportable X-ray—X-ray equipment installed in a vehicle or that may readily be disassembled for transport in a vehicle.

Utilization equipment—Utilization equipment means equipment which utilizes electric energy for mechanical, chemical, heating, lighting, or similar useful purpose.

Utilization system—A utilization system is a system which provides electric power and light for employee workplaces, and includes the premises wiring system and utilization equipment.

Ventilated—Provided with a means to permit circulation of air sufficient to remove an excess of heat, fumes, or vapors.

Volatile flammable liquid—A flammable liquid having a flash point below 38 degrees C (100 degrees F) or whose temperature is above its flash point.

Voltage (of a circuit)—The greatest root-mean-square (effective) difference of potential between any two conductors of the circuit concerned.

Voltage, nominal—A nominal value assigned to a circuit or system for the purpose of conveniently designating its voltage class (as 120/240,480Y/277, 600, etc.). The actual voltage at which a circuit operates can vary from the nominal within a range that permits satisfactory operation of equipment.

Voltage to ground—For grounded circuits, the voltage between the given conductor and that point or conductor of the circuit that is grounded; for ungrounded circuits, the greatest voltage between the given conductor and any other conductor of the circuit.

Watertight—So constructed that moisture will not enter the enclosure.

Weatherproof—So constructed or protected that exposure to the weather will not interfere with successful operation. Rainproof, raintight, or watertight equipment can fulfill the requirements for weatherproof where varying weather conditions other than wetness, such as snow, ice, dust, or temperature extremes, are not a factor.

Wet location—See "Location."

Wireways—Wireways are sheet-metal troughs with hinged or removable covers for housing and protecting electric wires and cable and in which conductors are laid in place after the wireway has been installed as a complete system.

DEFINITIONS APPLICABLE TO 29 CFR 1910.269

Affected employee—An employee whose job requires him or her to operate or use a machine or equipment on which servicing or maintenance is being performed under lockout or tagout, or whose job requires him or her to work in an area in which such servicing or maintenance is being performed.

Attendant—An employee assigned to remain immediately outside the entrance to an enclosed or other space to render assistance as needed to employees inside the space.

Authorized employee—An employee who locks out or tags out machines or equipment in order to perform servicing or maintenance on that machine or equipment. An affected employee becomes an authorized employee when that employee's duties include performing servicing or maintenance covered under this section.

Automatic circuit recloser—A self-controlled device for interrupting and reclosing an alternating current circuit with a predetermined sequence of opening and reclosing followed by resetting, hold-closed, or lockout operation.

Barricade—A physical obstruction such as tapes, cones, or A-frame type wood or metal structures intended to provide a warning about and to limit access to a hazardous area.

Barrier—A physical obstruction which is intended to prevent contact with energized lines or equipment or to prevent unauthorized access to a work area.

Bond—The electrical interconnection of conductive parts designed to maintain a common electrical potential.

Bus—A conductor or a group of conductors that serve as a common connection for two or more circuits.

Bushing—An insulating structure, including a through conductor or providing a passageway for such a conductor, with provision for mounting on a barrier, conducting or otherwise, for the purposes of insulating the conductor from the barrier and conducting current from one side of the barrier to the other.

Cable—A conductor with insulation, or a stranded conductor with or without insulation and other coverings (single-conductor cable), or a combination of conductors insulated from one another (multiple-conductor cable).

Cable sheath—A conductive protective covering applied to cables.

NOTE: A cable sheath may consist of multiple layers of which one or more is conductive.

Circuit—A conductor or system of conductors through which an electric current is intended to flow.

Clearance (between objects)—The clear distance between two objects measured surface to surface.

Clearance (for work)—Authorization to perform specified work or permission to enter a restricted area.

Communication lines—(See Lines, communication.)

Conductor—A material, usually in the form of a wire, cable, or bus bar, used for carrying an electric current.

Covered conductor—A conductor covered with a dielectric having no rated insulating strength or having a rated insulating strength less than the voltage of the circuit in which the conductor is used.

Current-carrying part—A conducting part intended to be connected in an electric circuit to a source of voltage. Non-current-carrying parts are those not intended to be so connected.

Deenergized—Free from any electrical connection to a source of potential difference and from electric charge; not having a potential different from that of the earth.

NOTE: The term is used only with reference to current-carrying parts, which are sometimes energized (alive).

Designated employee (designated person)—An employee (or person) who is designated by the employer to perform specific duties under the terms of this section and who is knowledgeable in the construction and operation of the equipment and the hazards involved.

Electric line truck—A truck used to transport personnel, tools, and material for electric supply line work.

Electric supply equipment—Equipment that produces, modifies, regulates, controls, or safeguards a supply of electric energy.

Electric supply lines—(See Lines, electric supply.)

Electric utility—An organization responsible for the installation, operation, or maintenance of an electric supply system.

Enclosed space—A working space, such as a manhole, vault, tunnel, or shaft, that has a limited means of egress or entry, that is designed for periodic employee entry under normal operating conditions, and that under normal conditions does not contain a hazardous atmosphere, but that may contain a hazardous atmosphere under abnormal conditions.

NOTE: Spaces that are enclosed but not designed for employee entry under normal operating conditions are not considered to be enclosed spaces for the purposes of this section. Similarly, spaces that are enclosed and that are expected to contain a hazardous atmosphere are not considered to be enclosed spaces for the purposes of this section. Such spaces meet the definition of permit spaces in § 1910.146 of this Part, and entry into them must be performed in accordance with that standard.

Energized (alive, live)—Electrically connected to a source of potential difference, or electrically charged so as to have a potential significantly different from that of earth in the vicinity.

Energy isolating device—A physical device that prevents the transmission or release of energy, including, but not limited to, the following: a manually operated electric circuit breaker, a disconnect switch, a manually operated switch, a slide gate, a slip blind, a line valve, blocks, and any similar device with a visible indication of the position of the device. (Push buttons, selector switches, and other control-circuit-type devices are not energy isolating devices.)

Energy ,source—Any electrical, mechanical, hydraulic, pneumatic, chemical, nuclear, thermal, or other energy source that could cause injury to personnel.

Equipment (electric)—A general term including material, fittings, devices, appliances, fixtures, apparatus, and the like used as part of or in connection with an electrical installation.

Exposed—Not isolated or guarded.

Ground—A conducting connection, whether intentional or accidental, between an electric circuit or equipment and the earth, or to some conducting body that serves in place of the earth.

Grounded—Connected to earth or to some conducting body that serves in place of the earth.

Guarded—Covered, fenced, enclosed, or otherwise protected, by means of suitable covers or casings, barrier rails or screens, mats, or platforms, designed to minimize the possibility, under normal conditions, of dangerous approach or accidental contact by persons or objects.

NOTE: Wires which are insulated, but not otherwise protected, are not considered as guarded.

Hazardous atmosphere means an atmosphere that may expose employees to the risk of death, incapacitation, impairment of ability to self—rescue (that is, escape unaided from an enclosed space), injury, or acute illness from one or more of the following causes:

1. Flammable gas, vapor, or mist in excess of 10 percent of its lower flammable limit (LFL);

2. Airborne combustible dust at a concentration that meets or exceeds its LFL;

NOTE: This concentration may be approximated as a condition in which the dust obscures vision at a distance of 5 feet (1.52 m) or less.

3. Atmospheric oxygen concentration below 19.5 percent or above 23.5 percent;

4. Atmospheric concentration of any substance for which a dose or a permissible exposure limit is published in Subpart G, Occupational Health and Environmental Control, or in Subpart Z, Toxic and Hazardous Substances, of this Part and which could result in employee exposure in excess of its dose or permissible exposure limit; Note: An atmospheric concentration of any substance that is not capable of causing death, incapacitation, impairment of ability to self-rescue, injury, or acute illness due to its health effects is not covered by this provision.

5. Any other atmospheric condition that is immediately dangerous to life or health.

NOTE: For air contaminants for which OSHA has not determined a dose or permissible exposure limit, other sources of information, such as Material Safety Data Sheets that comply with the Hazard Communication Standard, § 1910.1200 of this Part, published information, and internal documents can provide guidance in establishing acceptable atmospheric conditions.

High-power tests—Tests in which fault currents, load currents, magnetizing currents, and line-dropping currents are used to test equipment, either at the equipment's rated voltage or at lower voltages.

High-voltage tests—Tests in which voltages of approximately 1000 volts are used as a practical minimum and in which the voltage source has sufficient energy to cause injury.

High wind—A wind of such velocity that the following hazards would be present:

1. An employee would be exposed to being blown from elevated locations, or

2. An employee or material handling equipment could lose control of material being handled, or

3. An employee would be exposed to other hazards not controlled by the standard involved. Note: Winds exceeding 40 miles per hour (64.4 kilometers per hour), or 30 miles per hour (48.3 kilometers per hour) if material handling is involved, are normally considered as meeting this criteria unless precautions are taken to protect employees from the hazardous effects of the wind. Immediately dangerous to life or health (IDLH) means any condition that poses an immediate or delayed threat to life or that would cause irreversible adverse health effects or that would interfere with an individual's ability to escape unaided from a permit space.

NOTE: Some materials—hydrogen fluoride gas and cadmium vapor, for example—may produce immediate transient effects that, even if severe, may pass without medical attention, but are followed by sudden, possibly fatal collapse 12-72 hours after exposure. The victim "feels normal" from recovery from transient effects until collapse. Such materials in hazardous quantities are considered to be "immediately" dangerous to life or health.

Insulated—Separated from other conducting surfaces by a dielectric (including air space) offering a high resistance to the passage of current. Note: When any object is said to be insulated, it is understood to be insulated for the conditions to which it is normally subjected. Otherwise, it is, within the purpose of this section, uninsulated.

Insulation (cable)—That which is relied upon to insulate the conductor from other conductors or conducting parts or from ground.

Line-clearance tree trimmer—An employee who, through related training or on-the-job experience or both, is familiar with the special techniques and hazards involved in line-clearance tree trimming.

NOTE 1: An employee who is regularly assigned to a line-clearance tree-trimming crew and who is undergoing on-the-job training and who, in the course of such training, has demonstrated an ability to perform duties safely at his or her level of training and who is

under the direct supervision of a line-clearance tree trimmer is considered to be a line-clearance tree trimmer for the performance of those duties.

NOTE 2: A line-clearance tree trimmer is not considered to be a "qualified employee" under this section unless he or she has the training required for a qualified employee under paragraph (a)(2)(ii) of this section. However, under the electrical safety-related work practices standard in Subpart S of this Part, a line-clearance tree trimmer is considered to be a "qualified employee". Tree trimming performed by such "qualified employees" is not subject to the electrical safety-related work practice requirements contained in § 1910.331 through § 1910.335 of this Part. (See also the note following §1910.332(b)(3) of this Part for information regarding the training an employee must have to be considered a qualified employee under § 1910.331 through § 1910.335 of this part.)

Line-clearance tree trimming—The pruning, trimming, repairing, maintaining, removing, or clearing of trees or the cutting of brush that is within 10 feet (305 cm) of electric supply lines and equipment.

Lines.

Communication lines—The conductors and their supporting or containing structures which are used for public or private signal or communication service, and which operate at potentials not exceeding 400 volts to ground or 750 volts between any two points of the circuit, and the transmitted power of which does not exceed 150 watts. If the lines are operating at less than 150 volts, no limit is placed on the transmitted power of the system. Under certain conditions, communication cables may include communication circuits exceeding these limitations where such circuits are also used to supply power solely to communication equipment.

NOTE: Telephone, telegraph, railroad signal, data, clock, fire, police alarm, cable television, and other systems conforming to this definition are included. Lines used for signaling purposes, but not included under this definition, are considered as electric supply lines of the same voltage.

Electric supply lines—Conductors used to transmit electric energy and their necessary supporting or containing structures. Signal lines of more than 400 volts are always supply lines within this section, and those of less than 400 volts are considered as supply lines, if so run and operated throughout.

Manhole—A subsurface enclosure which personnel may enter and which is used for the purpose of installing, operating, and maintaining submersible equipment or cable.

Manhole steps—A series of steps individually attached to or set into the walls of a manhole structure.

Minimum approach distance—The closest distance an employee is permitted to approach an energized or a grounded object.

Qualified employee (qualified person)—One knowledgeable in the construction and operation of the electric power generation, transmission, and distribution equipment involved, along with the associated hazards.

NOTE 1: An employee must have the training required by paragraph (a)(2)(ii) of this section in order to be considered a qualified employee.

NOTE 2: Except under paragraph (g)(2)(v) of this section, an employee who is undergoing on-the-job training and who, in the course of such training, has demonstrated an ability to perform duties safely at his or her level of training and who is under the direct supervision of a qualified person is considered to be a qualified person for the performance of those duties.

Step bolt—A bolt or rung attached at intervals along a structural member and used for foot placement during climbing or standing.

Switch—A device for opening and closing or for changing the connection of a circuit. In this section, a switch is understood to be manually operable, unless otherwise stated.

System operator—A qualified person designated to operate the system or its parts.

Vault—An enclosure, above or below ground, which personnel may enter and which is used for the purpose of installing, operating, or maintaining equipment or cable.

Vented vault—A vault that has provision for air changes using exhaust flue stacks and low level air intakes operating on differentials of pressure and temperature providing for airflow which precludes a hazardous atmosphere from developing.

Voltage—The effective (rms) potential difference between any two conductors or between a conductor and ground. Voltages are expressed in nominal values unless otherwise indicated. The nominal voltage of a system or circuit is the value assigned to a system or circuit of a given voltage class for the purpose of convenient designation. The operating voltage of the system may vary above or below this value.

DEFINITIONS APPLICABLE TO 29 CFR 1926 SUBPART K

Acceptable—An installation or equipment is acceptable to the Assistant Secretary of Labor, and approved within the meaning of this Subpart K:

a. If it is accepted, or certified, or listed, or labeled, or otherwise determined to be safe by a qualified testing laboratory capable of determining the suitability of materials and equipment for installation and use in accordance with this standard; or

b. With respect to an installation or equipment of a kind which no qualified testing laboratory accepts, certifies, lists, labels, or determines to be safe, if it is inspected or tested by another Federal agency, or by a State, municipal, or other local authority responsible for enforcing occupational safety provisions of the National Electrical Code, and found in compliance with those provisions; or

c. With respect to custom—made equipment or related installations which are designed, fabricated for, and intended for use by a particular customer, if it is determined to be safe for its intended use by its manufacturer on the basis of test data which the employer keeps and makes available for inspection to the Assistant Secretary and his authorized representatives.

Accepted—An installation is "accepted" if it has been inspected and found to be safe by a qualified testing laboratory.

Accessible—(As applied to wiring methods.) Capable of being removed or exposed without damaging the building structure or finish, or not permanently closed in by the structure or finish of the building. (See "concealed" and "exposed.")

Accessible—(As applied to equipment.) Admitting close approach; not guarded by locked doors, elevation, or other effective means. (See "Readily accessible.")

Ampacity—The current in amperes a conductor can carry continuously under the conditions of use without exceeding its temperature rating.

Appliances—Utilization equipment, generally other than industrial, normally built in standardized sizes or types, which is installed or connected as a unit to perform one or more functions.

Approved—Acceptable to the authority enforcing this Subpart. The authority enforcing this Subpart is the Assistant Secretary of Labor for Occupational Safety and Health. The definition of "acceptable" indicates what is acceptable to the Assistant Secretary of Labor, and therefore approved within the meaning of this Subpart.

Askarel—A generic term for a group of nonflammable synthetic chlorinated hydrocarbons used as electrical insulating media. Askarels of various compositional types are used. Under arcing conditions the gases produced, while consisting predominantly of noncombustible hydrogen chloride, can include varying amounts of combustible gases depending upon the askarel type.

Attachment plug (Plug cap)(Cap)—A device which, by insertion in a receptacle, establishes connection between the conductors of the attached flexible cord and the conductors connected permanently to the receptacle.

Automatic—Self-acting, operating by its own mechanism when actuated by some impersonal influence, as for example, a change in current strength, pressure, temperature, or mechanical configuration.

Bare conductor—See "Conductor."

Bonding—The permanent joining of metallic parts to form an electrically conductive path which will assure electrical continuity and the capacity to conduct safely any current likely to be imposed.

Bonding jumper—A reliable conductor to assure the required electrical conductivity between metal parts required to be electrically connected.

Branch circuit—The circuit conductors between the final overcurrent device protecting the circuit and the outlet(s).

Building—A structure which stands alone or which is cut off from adjoining structures by fire walls with all openings therein protected by approved fire doors.

Cabinet—An enclosure designed either for surface or flush mounting, and provided with a frame, mat, or trim in which a swinging door or doors are or may be hung.

Certified—Equipment is "certified" if it:

a. has been tested and found by a qualified testing laboratory to meet applicable test standards or to be safe for use in a specified manner, and

b. is of a kind whose production is periodically inspected by a qualified testing laboratory. Certified equipment must bear a label, tag, or other record of certification.

Circuit breaker—

a. (600 volts nominal, or less.)—A device designed to open and close a circuit by nonautomatic means and to open the circuit automatically on a predetermined overcurrent without injury to itself when properly applied within its rating.

b. (Over 600 volts, nominal.)—A switching device capable of making, carrying, and breaking currents under normal circuit conditions, and also making, carrying for a specified time, and breaking currents under specified abnormal circuit conditions, such as those of short circuit.

Class I locations—Class I locations are those in which flammable gases or vapors are or may be present in the air in quantities sufficient to produce explosive or ignitable mixtures. Class I locations include the following:

a. *Class I, Division* I—A Class 1, Division 1 location is a location:

   1. in which ignitable concentrations of flammable gases or vapors may exist under normal operating conditions; or

   2. in which ignitable concentrations of such gases or vapors may exist frequently because of repair or maintenance operations or because of leakage; or

   3. in which breakdown or faulty operation of equipment or processes might release ignitable concentrations of flammable gases or vapors, and might also cause simultaneous failure of electric equipment.

NOTE: This classification usually includes locations where volatile flammable liquids or liquefied flammable gases are transferred from one container to another; interiors of spray booths and areas in the vicinity of spraying and painting operations where volatile flammable solvents are used; locations containing open tanks or vats of volatile flammable liquids; drying rooms or compartments for the evaporation of flammable solvents; inadequately ventilated pump rooms for flammable gas or for volatile flammable liquids; and all other locations where ignitable concentrations of flammable vapors or gases are likely to occur in the course of normal operations.

b. *Class I, Division 2*—A Class I, Division 2 location is a location:

   1. in which volatile flammable liquids or flammable gases are handled, processed, or used, but in which the hazardous liquids, vapors, or gases will normally be confined within closed containers or closed systems from which they can escape only in case of

accidental rupture or breakdown of such containers or systems, or in case of abnormal operation of equipment; or

2. in which ignitable concentrations of gases or vapors are normally prevented by positive mechanical ventilation, and which might become hazardous through failure or abnormal operations of the ventilating equipment; or

3. that is adjacent to a Class 1, Division 1 location, and to which ignitable concentrations of gases or vapors might occasionally be communicated unless such communication is prevented by adequate positive—pressure ventilation from a source of clean air, and effective safeguards against ventilation failure are provided.

NOTE: This classification usually includes locations where volatile flammable liquids or flammable gases or vapors are used, but which would become hazardous only in case of an accident or of some unusual operating condition. The quantity of flammable material that might escape in case of accident, the adequacy of ventilating equipment, the total area involved, and the record of the industry or business with respect to explosions or fires are all factors that merit consideration in determining the classification and extent of each location. Piping without valves, checks, meters, and similar devices would not ordinarily introduce a hazardous condition even though used for flammable liquids or gases. Locations used for the storage of flammable liquids or of liquefied or compressed gases in sealed containers would not normally be considered hazardous unless also subject to other hazardous conditions. Electrical conduits and their associated enclosures separated from process fluids by a single seal or barrier are classed as a Division 2 location if the outside of the conduit and enclosures is a nonhazardous location.

Class II locations—Class II locations are those that are hazardous because of the presence of combustible dust. Class II locations include the following:

a. *Class II, Division I*—A Class II, Division 1 location is a location:

1. in which combustible dust is or may be in suspension in the air under normal operating conditions, in quantities sufficient to produce explosive or ignitable mixtures; or

2. where mechanical failure or abnormal operation of machinery or equipment might cause such explosive or ignitable mixtures to be produced, and might also provide a source of ignition through simultaneous failure of electric equipment, operation of protection devices, or from other causes, or

3. in which combustible dusts of an electrically conductive nature may be present.

NOTE: Combustible dusts which are electrically nonconductive include dusts produced in the handling and processing of grain and grain products, pulverized sugar and cocoa, dried egg and milk powders, pulverized spices, starch and pastes, potato and woodflour, oil meal from beans and seed, dried hay, and other organic materials which may produce combustible dusts when processed or handled. Dusts containing magnesium or aluminum are particularly hazardous and the use of extreme caution is necessary to avoid ignition and explosion.

b. *Class II, Division 2*—A Class II, Division 2 location is a location in which:

1. combustible dust will not normally be in suspension in the air in quantities sufficient to produce explosive or ignitable mixtures, and dust accumulations are normally insufficient to interfere with the normal operation of electrical equipment or other apparatus; or

2. dust may be in suspension in the air as a result of infrequent malfunctioning of handling or processing equipment, and dust accumulations resulting therefrom may be ignitable by abnormal operation or failure of electrical equipment or other apparatus.

NOTE: This classification includes locations where dangerous concentrations of suspended dust would not be likely but where dust accumulations might form on or in the vicinity of electric equipment. These areas may contain equipment from which appreciable quantities of dust would escape under abnormal operating conditions or be adjacent to a Class II Division 1 location, as described above, into which an explosive or ignitable concentration of dust may be put into suspension under abnormal operating conditions.

Class III locations—Class III locations are those that are hazardous because of the presence of easily ignitable fibers or flyings but in which such fibers or flyings are not likely to be in suspension in the air in quantities sufficient to produce ignitable mixtures. Class I I I locations include the following:

a. *Class III, Division I—A* Class III, Division I location is a location in which easily ignitable fibers or materials producing combustible flyings are handled, manufactured, or used.

NOTE: Easily ignitable fibers and flyings include rayon, cotton (including cotton linters and cotton waste), sisal or henequen, istle, jute, hemp, tow, cocoa fiber, oakum, baled waste kapok, Spanish moss, excelsior, sawdust, woodchips, and other material of similar nature.

b. *Class III, Division 2—A* Class 111, Division 2 location is a location in which easily ignitable fibers are stored or handled, except in process of manufacture.

Collector ring—A collector ring is an assembly of slip rings for transferring electrical energy from a stationary to a rotating member.

Concealed—Rendered inaccessible by the structure or finish of the building. Wires in concealed raceways are considered concealed, even though they may become accessible by withdrawing them. [See "Accessible. (As applied to wiring methods.)"]

Conductor—

a. *Bare*—A conductor having no covering or electrical insulation whatsoever.

b. *Covered—A* conductor encased within material of composition or thickness that is not recognized as electrical insulation.

c. *Insulated—A* conductor encased within material of composition and thickness that is recognized as electrical insulation.

Controller—A device or group of devices that serves to govern, in some predetermined manner, the electric power delivered to the apparatus to which it is connected.

Covered conductor—See "Conductor."

Cutout—(Over 600 volts, nominal.) An assembly of a fuse support with either a fuseholder, fuse carrier, or disconnecting blade. The fuseholder or fuse carrier may include a conducting element (fuse link), or may act as the disconnecting blade by the inclusion of a nonfusible member.

Cutout box—An enclosure designed for surface mounting and having swinging doors or covers secured directly to and telescoping with the walls of the box proper. (See "Cabinet.")

Damp location—See "Location."

Dead front—Without live parts exposed to a person on the operating side of the equipment.

Device—*A* unit of an electrical system which is intended to carry but not utilize electric energy.

Disconnecting means—*A* device, or group of devices, or other means by which the conductors of a circuit can be disconnected from their source of supply.

Disconnecting (or Isolating) switch—(Over 600 volts, nominal.) A mechanical switching device used for isolating a circuit or equipment from a source of power.

Dry location—See "Location."

Enclosed—Surrounded by a case, housing, fence or walls which will prevent persons from accidentally contacting energized parts.

Enclosure—The case or housing of apparatus, or the fence or walls surrounding an installation to prevent personnel from accidentally contacting energized parts, or to protect the equipment from physical damage.

Equipment—A general term including material, fittings, devices, appliances, fixtures, apparatus, and the like, used as a part of, or in connection with, an electrical installation.

Equipment grounding conductor—See "Grounding conductor, equipment."

Explosion-proof apparatus—Apparatus enclosed in a case that is capable of withstanding an explosion of a specified gas or vapor which may occur within it and of preventing the ignition of a specified gas or vapor surrounding the enclosure by sparks, flashes, or explosion of the gas or vapor within, and which operates at such an external temperature that it will not ignite a surrounding flammable atmosphere.

Exposed—(As applied to live parts.) Capable of being inadvertently touched or approached nearer than a safe distance by a person. It is applied to parts not suitably guarded, isolated, or insulated. (See "Accessible" and "Concealed.")

Exposed—(As applied to wiring methods.) On or attached to the surface or behind panels designed to allow access. [See "Accessible. (As applied to wiring methods.)"]

Exposed—(For the purposes of 1926.408(d), Communications systems.) Where the circuit is in such a position that in case of failure of supports or insulation, contact with another circuit may result.

Externally operable—Capable of being operated without exposing the operator to contact with live parts.

Feeder—All circuit conductors between the service equipment, or the generator switchboard of an isolated plant, and the final branch—circuit overcurrent device.

Festoon lighting—A string of outdoor lights suspended between two points more than 15 feet (4.57 m) apart.

Fitting—An accessory such as a locknut, bushing, or other part of a wiring system that is intended primarily to perform a mechanical rather than an electrical function.

Fuse—(Over 600 volts, nominal.) An overcurrent protective device with a circuit opening fusible part that is heated and severed by the passage of overcurrent through it. A fuse comprises all the parts that form a unit capable of performing the prescribed functions. It may or may not be the complete device necessary to connect it into an electrical circuit.

Ground—A conducting connection, whether intentional or accidental, between an electrical circuit or equipment and the earth, or to some conducting body that serves in place of the earth.

Grounded—Connected to earth or to some conducting body that serves in place of the earth.

Grounded, effectively (Over 600 volts, nominal.)—Permanently connected to earth through a ground connection of sufficiently low impedance and having sufficient ampacity that ground fault current which may occur cannot build up to voltages dangerous to personnel.

Grounded conductor—A system or circuit conductor that is intentionally grounded.

Grounding conductor—A conductor used to connect equipment or the grounded circuit of a wiring system to a grounding electrode or electrodes.

Grounding conductor, equipment—The conductor used to connect the noncurrent—carrying metal parts of equipment, raceways, and other enclosures to the system grounded conductor and/or the grounding electrode conductor at the service equipment or at the source of a separately derived system.

Grounding electrode conductor—The conductor used to connect the grounding electrode to the equipment grounding conductor and/or to the grounded conductor of the circuit at the service equipment or at the source of a separately derived system.

Ground fault circuit interrupter—A device for the protection of personnel that functions to deenergize a circuit or portion thereof within an established period of time when a current to ground exceeds some predetermined value that is less than that required to operate the overcurrent protective device of the supply circuit.

Guarded—Covered, shielded, fenced, enclosed, or otherwise protected by means of suitable covers, casings, barriers, rails, screens, mats, or platforms to remove the likelihood of approach to a point of danger or contact by persons or objects.

Hoistway—Any shaftway, hatchway, well hole, or other vertical opening or space in which an elevator or dumbwaiter is designed to operate.

Identified (conductors or terminals)—Identified, as used in reference to a conductor or its terminal, means that such conductor or terminal can be recognized as grounded.

Identified (for the use)—Recognized as suitable for the specific purpose, function, use, environment, application, etc. where described as a requirement in this standard. Suitability of equipment for a specific purpose, environment, or application is determined by a qualified testing laboratory where such identification includes labeling or listing.

Insulated conductor—See "Conductor."

Interrupter switch—(Over 600 volts, nominal.) *A* switch capable of making, carrying, and interrupting specified currents.

Intrinsically safe equipment and associated wiring—Equipment and associated wiring in which any spark or thermal effect, produced either normally or in specified fault conditions, is incapable, under certain prescribed test conditions, of causing ignition of a mixture of flammable or combustible material in air in its most easily ignitable concentration.

Isolated—Not readily accessible to persons unless special means for access are used.

Isolated power system—A system comprising an isolating transformer or its equivalent, a line isolation monitor, and its ungrounded circuit conductors.

Labeled—Equipment or materials to which has been attached a label, symbol or other identifying mark of a qualified testing laboratory which indicates compliance with appropriate standards or performance in a specified manner.

Lighting outlet—An outlet intended for the direct connection of a lampholder, a lighting fixture, or a pendant cord terminating in a lampholder.

Listed—Equipment or materials included in a list published by a qualified testing laboratory whose listing states either that the equipment or material meets appropriate standards or has been tested and found suitable for use in a specified manner.

Location—

a. *Damp location*—Partially protected locations under canopies, marquees, roofed open porches, and like locations, and interior locations subject to moderate degrees of moisture, such as some basements.

b. *Dry location*—A location not normally subject to dampness or wetness. A location classified as dry may be temporarily subject to dampness or wetness, as in the case of a building under construction.

c. *Wet location*—Installations underground or in concrete slabs or masonry in direct contact with the earth, and locations subject to saturation with water or other liquids, such as locations exposed to weather and unprotected.

Mobile X-ray—X-ray equipment mounted on a permanent base with wheels and/or casters for moving while completely assembled.

Motor control center—An assembly of one or more enclosed sections having a common power bus and principally containing motor control units.

Outlet—A point on the wiring system at which current is taken to supply utilization equipment.

Overcurrent—Any current in excess of the rated current of equipment or the ampacity of a conductor. It may result from overload (see definition), short circuit, or ground fault. A current in excess of rating may be accommodated by certain equipment and conductors for a given set of conditions. Hence the rules for overcurrent protection are specific for particular situations.

Overload—Operation of equipment in excess of normal, full load rating, or of a conductor in excess of rated ampacity which, when it persists for a sufficient length of time, would cause damage or dangerous overheating. A fault, such as a short circuit or ground fault, is not an overload. (See "Overcurrent.")

Panelboard—A single panel or group of panel units designed for assembly in the form of a single panel; including buses, automatic overcurrent devices, and with or without switches for the control of light, heat, or power circuits; designed to be placed in a cabinet or cutout box placed in or against a wall or partition and accessible only from the front. (See "Switchboard.")

Portable X-ray—X-ray equipment designed to be hand—carried.

Power fuse—(Over 600 volts, nominal.) See "Fuse."

Power outlet—An enclosed assembly which may include receptacles, circuit breakers, fuseholders, fused switches, buses and watt-hour meter mounting means; intended to serve as a means for distributing power required to operate mobile or temporarily installed equipment.

Premises wiring system—That interior and exterior wiring, including power, lighting, control, and signal circuit wiring together with all of its associated hardware, fittings, and wiring devices, both permanently and temporarily installed, which extends from the load end of the service drop, or load end of the service lateral conductors to the outlet(s). Such wiring does not include wiring internal to appliances, fixtures, motors, controllers, motor control centers, and similar equipment.

Qualified person—One familiar with the construction and operation of the equipment and the hazards involved.

Qualified testing laboratory—A properly equipped and staffed testing laboratory which has capabilities for and which provides the following services:

a. Experimental testing for safety of specified items of equipment and materials referred to in this standard to determine compliance with appropriate test standards or performance in a specified manner;

b. Inspecting the run of such items of equipment and materials at factories for product evaluation to assure compliance with the test standards;

c. Service-value determinations through field inspections to monitor the proper use of labels on products and with authority for recall of the label in the event a hazardous product is installed;

d. Employing a controlled procedure for identifying the listed and/or labeled equipment or materials tested; and

e. Rendering creditable reports or findings that are objective and without bias of the tests and test methods employed.

Raceway—A channel designed expressly for holding wires, cables, or busbars, with additional functions as permitted in this subpart. Raceways may be of metal or insulating material, and the term includes rigid metal conduit, rigid nonmetallic conduit, intermediate metal conduit, liquidtight flexible metal conduit, flexible metallic tubing, flexible metal conduit, electrical metallic tubing, underfloor raceways, cellular concrete floor raceways, cellular metal floor raceways, surface raceways, wireways, and busways.

Readily accessible—Capable of being reached quickly for operation, renewal, or inspections, without requiring those to whom ready access is requisite to climb over or remove obstacles or to resort to portable ladders, chairs, etc. (See "Accessible.")

Receptacle—A receptacle is a contact device installed at the outlet for the connection of a single attachment plug. A single receptacle is a single contact device with no other contact device on the same yoke. A multiple receptacle is a single device containing two or more receptacles.

Receptacle outlet—An outlet where one or more receptacles are installed.

Remote-control circuit—Any electric circuit that controls any other circuit through a relay or an equivalent device.

Sealable equipment—Equipment enclosed in a case or cabinet that is provided with a means of sealing or locking so that live parts cannot be made accessible without opening the enclosure. The equipment may or may not be operable without opening the enclosure.

Separately derived system—A premises wiring system whose power is derived from generator, transformer, or converter windings and has no direct electrical connection, including a solidly connected grounded circuit conductor, to supply conductors originating in another system.

Service—The conductors and equipment for delivering energy from the electricity supply system to the wiring system of the premises served.

Service conductors—The supply conductors that extend from the street main or from transformers to the service equipment of the premises supplied.

Service drop—The overhead service conductors from the last pole or other aerial support to and including the splices, if any, connecting to the service—entrance conductors at the building or other structure.

Service-entrance conductors, overhead system—The service conductors between the terminals of the service equipment and a point usually outside the building, clear of building walls, where joined by tap or splice to the service drop.

Service-entrance conductors, underground system—The service conductors between the terminals of the service equipment and the point of connection to the service lateral. Where service equipment is located outside the building walls, there may be no service—entrance conductors, or they may be entirely outside the building.

Service equipment—The necessary equipment, usually consisting of a circuit breaker or switch and fuses, and their accessories, located near the point of entrance of supply conductors to a building or other structure, or an otherwise defined area, and intended to constitute the main control and means of cutoff of the supply.

Service raceway—The raceway that encloses the service—entrance conductors.

Signaling circuit—Any electric circuit that energizes signaling equipment.

Switchboard—A large single panel, frame, or assembly of panels which have switches, buses, instruments, overcurrent and other protective devices mounted on the face or back or both. Switchboards are generally accessible from the rear as well as from the front and are not intended to be installed in cabinets. (See "Panelboard.")

Switches—

a. *General-use switch*—A switch intended for use in general distribution and branch circuits. It is rated in amperes, and it is capable of interrupting its rated current at its rated voltage.

b. *General-use snap switch*—A form of general-use switch so constructed that it can be installed in flush device boxes or on outlet box covers, or otherwise used in conjunction with wiring systems recognized by this subpart.

c. *Isolating switch*—A switch intended for isolating an electric circuit from the source of power. It has no interrupting rating, and it is intended to be operated only after the circuit has been opened by some other means.

d. *Motor-circuit switch*—A switch, rated in horsepower, capable of interrupting the maximum operating overload current of a motor of the same horsepower rating as the switch at the rated voltage.

Switching devices—(Over 600 volts, nominal.) Devices designed to close and/or open one or more electric circuits. Included in this category are circuit breakers, cutouts, disconnecting (or isolating) switches, disconnecting means, and interrupter switches.

Transportable X-ray—X-ray equipment installed in a vehicle or that may readily be disassembled for transport in a vehicle.

Utilization equipment—Utilization equipment means equipment which utilizes electric energy for mechanical, chemical, heating, lighting, or similar useful purpose.

Utilization system—A utilization system is a system which provides electric power and light for employee workplaces, and includes the premises wiring system and utilization equipment.

Ventilated—Provided with a means to permit circulation of air sufficient to remove an excess of heat, fumes, or vapors.

Volatile flammable liquid—A flammable liquid having a flash point below 38 degrees C (100 degrees F) or whose temperature is above its flash point, or a Class 11 combustible liquid having a vapor pressure not exceeding 40 psia (276 kPa) at 38 deg. C (100 deg. F) whose temperature is above its flash point.

Voltage—(Of a circuit.) The greatest root—mean—square (effective) difference of potential between any two conductors of the circuit concerned.

Voltage, nominal—A nominal value assigned to a circuit or system for the purpose of conveniently designating its voltage class (as 120/240,480Y/277, 600, etc.). The actual voltage at which a circuit operates can vary from the nominal within a range that permits satisfactory operation of equipment.

Voltage to ground—For grounded circuits, the voltage between the given conductor and that point or conductor of the circuit that is grounded; for ungrounded circuits, the greatest voltage between the given conductor and any other conductor of the circuit.

Watertight—So constructed that moisture will not enter the enclosure.

Weatherproof—So constructed or protected that exposure to the weather will not interfere with successful operation. Rainproof, raintight, or watertight equipment can fulfill the requirements for weatherproof where varying weather conditions other than wetness, such as snow, ice, dust, or temperature extremes, are not a factor.

Wet location—See "Location."

DEFINITIONS APPLICABLE TO 29 CFR 1926 SUBPART V

Alive or live (energized)—The term means electrically connected to a source of potential difference, or electrically charged so as to have a potential significantly different from that of the earth in the vicinity. The term "live" is sometimes used in place of the term "current—carrying," where the intent is clear, to avoid repetition of the longer term.

Automatic circuit recloser—The term means a self—controlled device for automatically interrupting and reclosing an alternating current circuit with a predetermined sequence of opening and reclosing followed by resetting, hold closed, or lockout operation.

Barrier—The term means a physical obstruction which is intended to prevent contact with energized lines or equipment.

Barricade—The term means a physical obstruction such as tapes, screens, or cones intended to warn and limit access to a hazardous area.

Bond—The term means an electrical connection from one conductive element to another for the purpose of minimizing potential differences or providing suitable conductivity for fault current or for mitigation of leakage current and electrolytic action.

Bushing—The term means an insulating structure including a through conductor, or providing a passageway for such a conductor, with provision for mounting on a barrier, conducting or otherwise, for the purpose of insulating the conductor from the barrier and conducting current from one side of the barrier to the other.

Cable—The term means a conductor with insulation, or a stranded conductor with or without insulation and other coverings (single-conductor cable) or a combination of conductors insulated from one another (multiple-conductor cable).

Cable sheath—The term means a protective covering applied to cables.

NOTE: A cable sheath may consist of multiple layers of which one or more is conductive.

Circuit—The term means a conductor or system of conductors through which an electric current is intended to flow.

Communication lines—The term means the conductors and their supporting or containing structures which are used for public or private signal or communication service, and which operate at potentials not exceeding 400 volts to ground or 750 volts between any two points of the circuit, and the transmitted power of which does not exceed 150 watts. When operating at less than 150 volts no limit is placed on the capacity of the system.

NOTE: Telephone, telegraph, railroad signal, data, clock, fire, police-alarm, community television antenna, and other systems conforming with the above are included. Lines used for signaling purposes, but not included under the above definition, are considered as supply lines of the same voltage and are to be so run.

Conductor—The term means a material, usually in the form of a wire, cable, or bus bar suitable for carrying an electric current.

Conductor, shielding—The term means an envelope which encloses the conductor of a cable and provides an equipotential surface in contact with the cable insulation.

Current-carrying part—The term means a conducting part intended to be connected in an electric circuit to a source of voltage. Non-current-carrying parts are those not intended to be so connected.

Dead (deenergized)—The term means free from any electrical connection to a source of potential difference and from electrical charges: Not having a potential difference from that of earth.

NOTE: The term is used only with reference to current—carrying parts which are sometimes alive (energized).

Designated employee—The term means a qualified person delegated to perform specific duties under the conditions existing.

Effectively grounded—The term means intentionally connected to earth through a ground connection or connections of sufficiently low impedance and having sufficient current-carrying capacity to prevent the buildup of voltages which may result in undue hazard to connected equipment or to persons.

Electric line trucks—The term means a truck used to transport men, tools, and material, and to serve as a traveling workshop for electric power line construction and maintenance work. It is sometimes equipped with a boom and auxiliary equipment for setting poles, digging holes, and elevating material or men.

Enclosed—The term means surrounded by a case, cage, or fence, which will protect the contained equipment and prevent accidental contact of a person with live parts.

Equipment—This is a general term which includes fittings, devices, appliances, fixtures, apparatus, and the like, used as part of, or in connection with, an electrical power transmission and distribution system, or communication systems.

Exposed—The term means not isolated or guarded.

Electric supply lines—The term means those conductors used to transmit electric energy and their necessary supporting or containing structures. Signal lines of more than 400 volts to ground are always supply lines within the meaning of the rules, and those of less than 400 volts to ground may be considered as supply lines, if so run and operated throughout.

Guarded—The term means protected by personnel, covered, fenced, or enclosed by means of suitable casings, barrier rails, screens, mats, platforms, or other suitable devices in accordance with standard barricading techniques designed to prevent dangerous approach or contact by persons or objects.

NOTE: Wires, which are insulated but not otherwise protected, are not considered as guarded.

Ground—(Reference). The term means that conductive body, usually earth, to which an electric potential is referenced.

Ground (as a noun)—The term means a conductive connection whether intentional or accidental, by which an electric circuit or equipment is connected to reference ground.

Ground (as a verb)—The term means the connecting or establishment of a connection, whether by intention or accident of an electric circuit or equipment to reference ground.

Grounding electrode (ground electrode)—The term grounding electrode means a conductor embedded in the earth, used for maintaining ground potential on conductors connected to it, and for dissipating into the earth current conducted to it.

Grounding electrode resistance—The term means the resistance of the grounding electrode to earth.

Grounding electrode conductor (grounding conductor)—The term means a conductor used to connect equipment or the grounded circuit of a wiring system to a grounding electrode.

Grounded conductor—The term means a system or circuit conductor which is intentionally grounded.

Grounded system—The term means a system of conductors in which at least one conductor or point (usually the middle wire, or neutral point of transformer or generator windings) is intentionally grounded, either solidly or through a current—limiting device (not a current—interrupting device).

Hotline tools and ropes—The term means those tools and ropes which are especially designed for work on energized high voltage lines and equipment. Insulated aerial equipment especially designed for work on energized high voltage lines and equipment shall be considered hot line.

Insulated—The term means separated from other conducting surfaces by a dielectric substance (including air space) offering a high resistance to the passage of current.

NOTE: When any object is said to be insulated, it is understood to be insulated in suitable manner for the conditions to which it is subjected. Otherwise, it is within the purpose of this subpart, uninsulated. Insulating covering of conductors is one means of making the conductor insulated.

Insulation (as applied to cable)—The term means that which is relied upon to insulate the conductor from other conductors or conducting parts or from ground.

Insulation, shielding—The term means an envelope which encloses the insulation of a cable and provides an equipotential surface in contact with cable insulation.

Isolated—The term means an object that is not readily accessible to persons unless special means of access are used.

Manhole—The term means a subsurface enclosure which personnel may enter and which is used for the purpose of installing, operating, and maintaining equipment and/or cable.

Pulling tension—The term means the longitudinal force exerted on a cable during installation.

Qualified person—The term means a person who by reason of experience or training is familiar with the operation to be performed and the hazards involved.

Switch—The term means a device for opening and closing or changing the connection of a circuit. In these rules, a switch is understood to be manually operable, unless otherwise stated.

Tag—The term means a system or method of identifying circuits, systems or equipment for the purpose of alerting persons that the circuit, system or equipment is being worked on.

Unstable material—The term means earth material, other than running, that because of its nature or the influence of related conditions, cannot be depended upon to remain in place without extra support, such as would be furnished by a system of shoring.

Vault—The term means an enclosure above or below ground which personnel may enter and is used for the purpose of installing, operating, and/or maintaining equipment and/or cable.

Voltage—The term means the effective (rms) potential difference between any two conductors or between a conductor and ground. Voltages are expressed in nominal values. The nominal voltage of a system or circuit is the value assigned to a system or circuit of a given voltage class for the purpose of convenient designation. The operating voltage of the system may vary above or below this value.

Voltage of an effectively grounded circuit—The term means the voltage between any conductor and ground unless otherwise indicated.

Voltage of a circuit not effectively grounded—The term means the voltage between any two conductors. If one circuit is directly connected to and supplied from another circuit of higher voltage (as in the case of an autotransformer), both are considered as of the higher voltage, unless the circuit of lower voltage is effectively grounded, in which case its voltage is not determined by the circuit of higher voltage. Direct connection implies electric connection as distinguished from connection merely through electromagnetic or electrostatic induction.

DEFINITIONS APPLICABLE TO SECTIONS 1 THROUGH 10

Bay—One vertical 19" wide segment of a rack cabinet. Several bays can be joined together to form a large rack cabinet.

Code of record—The code in effect at the time of design or installation. Unless required to correct a known hazard or a major modification is being performed, installations in compliance with the code of record, do not need to be upgrade to a later edition of the code unless so stated in the code.

Controlled access—If the chassis are screwed into the rack cabinet. Doors having latches can be taken to mean the circuitry is controlled. Control of the access to the area in which the tester is located is also a means of control. In this case the area must be identified.

Electroexplosive device—An explosive device detonated by an integral electrical component upon application of a specified voltage/current pulse to that component.

Electromagnetic (EMR) field—Time varying distribution in some medium of electric and magnetic forces.

Electromagnetic radiation—Emission of electromagnetic energy from an electrical source in a portion of the radio frequency spectrum which may pose a threat to electroexplosive devices.

Emergency-shutdown pushbutton (E-stop)—A control device provided to automatically stop electrical energy to devices in the area during an emergency.

Failsafe—Built-in safety characteristics of a unit or system so that a failure (of the unit or system) or a loss of control power will not result in an unsafe condition.

Failsafe—Built-in safety characteristics of a unit or system so that unit or system failure or a loss of control power will not result in an unsafe condition.

General access area—An area that does not present hazards to personnel while equipment and systems are functioning normally. These areas are accessible to all personnel.

Grounding hook—A device for making a temporary connection to discharge and ground the internal energy sources in hazardous electrical equipment. It consists of a bare copper rod shaped like a shepherd's hook at one end, an insulating handle, and a suitable bare flexible copper cable securely connected at the other end, and can be securely connected to an equipment or building ground.

Interlocked access areas—Areas in which the sources of power must be interlocked with the access doors because of the hazards the areas contain.

Leakage current—Refers to all currents, including capacitively coupled currents, that may be conveyed between exposed surfaces of the equipment and ground or other exposed surfaces of the equipment.

Limited access areas—Areas that are kept locked and are accessible only to authorized personnel because of the hazards they contain.

Modulation—Change in normal characteristics of the recurring pattern in an electromagnetic field as a result of a secondary electrical signal having been combined with the electrical signal from which the field originates.

Personnel safety interlock system—One or more of the emergency—shutdown systems or personnel access control systems or both.

Power density—Emitted power per unit cross—sectional area normal to the direction of propagation of an electromagnetic wave from which results an electromagnetic field.

Rack cabinet—Any enclosure intended to house electrical equipment mounted to cabinet rails mounted within the cabinet. Most rack cabinets house chassis 19" wide. They are available in several heights.

Radio frequency—Non ionizing radiation generated in the portion of the frequency spectrum for electromagnetic energy between audio and ultraviolet.

Safety barrier—A safeguard installed to restrict personnel access to a hazardous area.

Safety coordinator—An individual who has the responsibility of the safety of the work that is to be performed and who is familiar with the hazards involved.

Safety interlock—An electrical or mechanical device that prevents operation of equipment or precludes access to hazardous areas, enclosures, or equipment.

Safety watch—A person whose specific duties are to observe the workers and operations being performed.

Shall—Information cited is a requirement from a regulatory standard such as OSHA and relevant DOE Orders.

Should—Information cited is a guidance such as consensus standards.

Underground facility—A facility built below ground surface.

Wavelength—Distance between repetitions of a recurring pattern in an electrical signal or electromagnetic field.

APPENDIX C WORK MATRICES – EXAMPLES

Table C-1. Job/Safety Equipment Matrix – Use those applicable to the actual job being performed—50-V to 150-V line to ground to 250-V line to line ac or dc.

	Work Description	Voltage, Current Reading	Fuse Pulling under 20 amps	Lead Lifting under 20 amps	Probing
Safety Equipment	Other insulated protective equipment such as gloves, blankets, sleeves, and mats.	X	X	X	X
	Safety Glasses	X	X	X	X
Tools	Insulated Hand Tools			X	X
	Insulated Fuse Puller		X		
Test Equipment	Other Approved Instrumentation	X			
	Clamp Ammeter	X			
	Approved Multimeter	X			

Table C-2. Job/Safety Equipment Matrix – Use those applicable to the actual job being performed—151-V line to ground to 600-V line to line ac or dc.

	Work Description	Probing	Voltage, Current Reading	Pulling Control Fuses or Power Fuses at No Load	Pulling/Inserting Plug-in Devices on Energized MCCs	Jacking Breakers In/Out on Energized MCCs	Other Work-Energized Circuits
Safety Requirements, Protective Equipment	Other insulated protective equipment such as fire resistant clothing, gloves, blankets, sleeves, and mats.	X	X	X	X	X	X
	Safety Belt and Life Line						X
	Face Shield						X
	Safety Glasses	X	X	X	X	X	X
Tools	Insulated Hand Tools	X			X		X
	Breaker Jacking Tools					X	
	Insulated Fuse Puller			X			
Test Equipment	Other Approved Instrumentation		X				X
	Clamp Ammeter		X				
	Approved Multimeter		X				X

Table C-3. Job/Safety Equipment Matrix – Use those applicable to the actual job being performed—601-V to 15,000-V line to line ac.

	Work Description	Voltage Reading	Jacking Breakers In/Out on Energized Equipment	High Pottting De-energized Equipment	Pulling Fuses–No Load
Safety Requirements, Protective Equipment	Fire Resistant Clothing	X	X		X
	Rubber Mat	X		X	X
	Sleeves	X	X	X	X
	High-Voltage Gloves	X	X	X	X
	Tagout and Lockout			X	
	Face Shield				X
	Safety Glasses	X	X	X	X
Tools	Hot Stick 5-ft Minimum				X
	High-Voltage Fuse Puller				X
	Breaker Jacking Tools		X		
Test Equipment	Other Approved Instrumentation	X			
	High Potential			X	
	High-Volt Detector	X			
	Glowtester	X			

Table C-4. Job/Safety Equipment Matrix – Use those applicable to the actual job being performed—electrolytic type battery work.

	Work Description	Voltage Reading	Battery Rundowns	Equalize	Torque Bolts, Lifting Leads
Safety Requirements, Protective Equipment	Fire Resistant Clothing				X
	Latex Gloves	X	X	X	X
	Apron	X	X	X	X
	Tagout and Lockout		X		X
	Goggles or Goggles and Face Shield	X	X	X	X
Tools	Insulated Hand Tools		X		X
Test Equipment	Other Approved Instrumentation	X	X	X	

Table C-5. Job/Safety Equipment Matrix – Use those applicable to the actual job being performed—overhead line/switchyard work

	Work Description	Install/Remove Ground	Operate Fused Cutouts	Operate Disconnect Switch	Dangerous Work	Climbing	Tree Trimming	Energized Work	Entering Trans./Bkr.	String/Rem. Ground Cond.	Enter Manhold	Operate Load Interrupter Switch	Voltage Readings	Jacking Bkrs. In/Out on Energized Equipment	Hi. Potting De-energized Equipment	Pulling Fuses – No Load	Work De-energized Equip.	Series Lighting	Pull Cable	Stringing Line
Safety Requirements, Protective Equipment	Fire resistant clothing	X	X	X	X			X				X	X	X						
	Pole Inspection					X														
	Confined Space or Safe Work Permit				X			X	X	X										
	Spike and Identify Cable																		X	
	Ground Cluster																X			
	Insulated or Ground Surface			X								X	X		X	X				
	Sleeves													X						
	H.V. Gloves/Leather Protection			X								X	X	X	X	X				
	Head Protection	X	X	X	X	X	X		X		X	X					X	X	X	X
	Leather Gloves																X			
	Face Shields															X				
	Safety Glasses	X	X	X	X	X	X	X	X	X	X	X	X	X	X	X	X	X	X	X
	Tagout and Lockout	X							X	X	X				X		X	X	X	X
	Body Harness and Life Line						X		X		X									
	Rubbergoods, Line Guards				X															
	Recloser Off	X			X															
Tools	Live-Line Tools							X												
	Reliable Communications									X									X	X
	Nonconductive Rope					X	X			X	X									X
	Hot Stick 3-ft Minimum	X	X													X				
	Traveling Ground									X										X
	High-Voltage Fuse Puller															X				
	Tree-Climbing Equipment																			
	Breaker Jacking Tools													X						
Test Equipment	Other Instrumentation as Approved by Electrical Foreman	X			X								X				X		X	
	High Potential														X					
	High-Voltage Detector												X				X	X		
	Glowtester	X								X			X				X	X		

APPENDIX D REGULATION MATRICES

Subject	1996 NEC	29 CFR 1910	29 CFR 1926	NFPA 70E	NESC
Approval	100	.303(a)	.403(a)	Part I, Ch. 1-1	-
Examination, Installation, and Use of Equipment	110-3	.303(b)	.403(b)	Part I, Ch. 1-3	-
Interrupting Rating	110-9, 230-65 250-1, 250-2		.403(c)	Part I, Ch. 1-3.4	-
Working Space Around	110-16(a)	.303(g)(1)	.403(1)(1)	Part I, Ch. 1-8.1	125A
Electrical Equipment					
<600 volts					
Guarding of live parts	110-17	.303(g)(2)	.403(1)(2)	Part I, Ch. 1-8.2	124,237E
Identification of Disconnecting Means	110-22,230-70(b) 384-13FPN	.303(f)	.403(h)	Part I, Ch. 1-7	128
Working Space Around Electrical Equipment > 600 volts	110-34(a)	.303(h)(3)(i)	.403(j)(3)(i)	Part I, Ch. 1-9.3.1	125B
Ground Fault Circuit Interrupter Protection for Personnel	210-7(d),210-8, 215-9, 305-6, 427-26	.304(b)(1)	.404(b)(1)	Part I, Ch. 2-2.4.3	-
Ground Fault Protection of Equipment	215-10,230-95, 240-13	.304(f)(7)	.404(f)(11)	Part I, Ch. 2-2.4	-
Disconnecting means capable of being locked	225-25x2,410-81, 422-21(b), 424-19(a),(b), 430-102(a)xl, (b)x, 113x1,127, 440-14x1,600-6(a), 610-31,32, 620-51(a),(c), 53,54,71(a), 625-23, 675-8, 710-21(e),24	.147(c)(2)(iii), .269(d)(2), .333(b)(2)	.417(d)	Part 11, Ch. 5	-

Subject	1996 NEC	29CFR 1910	29CFR 1926	NFPA 70E	NESC
Vertical Clearance from Ground	230-24(b)	.304(c)(2)	.404(c)(ii)	Part 1, Ch. 2-3.2	232
Grounding for protection of Employees	250	.269(n)	.954(a)	Part II, Ch. 2-4.2, Part III, Ch. 11-3	210
Purposes of Grounding	250-1 FPN	.304(f)	.404(f)	Part I, Ch. 2-6	-
Systems to be Grounded	250-5	.304(f)(1)	.404(f)(1)	Part I, Ch. 2-6.1.4	92A,B
Portable and vehicle mounted generators	250-6		.404(f)(3)	Part I, Ch. 2-6.1.7	-
Grounding Service Connections	250-23(a), (b)	.304(f)(3)(ii)	.404(f)(5)(ii)	Part I, Ch. 2-6.2.2	93
Grounding separately derived AC system	250-26	.304(f)(3)(ii)	.404(f)(5)		92B,93,94
Grounding Equipment Connections	250-50(a)	.304(f)(3)	.404(f)(5)	Part I, Ch. 2-6.2.3	93
Grounding Path	250-51	.304(f)(4)	.404(f)(6)	Part I, Ch. 2-6.3	93C
Electrical and Mechanical Continuity of Raceways, Enclosures, and Cables	250-51,75,76, 77, 250-91,300-10, 300-12	.304(f)(4), (5)	.404(f)(7), (9)	Part I, Ch. 2-6.4,.6	93C
Use and Identification of Grounded and Grounding Conductors	250-57(b),200-6 300-3(b)	.304(a)	.404(a)	Part I, Ch. 2-1	-
Methods of Grounding Fixed Equipment	250-58,250-50	.304(f)(6)	.404(f)(8)	Part I, Ch. 2-6.5	93C
Bonding	250-79(d), (e)	.304(f)(4)	.404(f)(9)	Part I, Ch. 2-6.6	92E,93E
Grounding Electrode system	250-81	.304(f)	.404(f)		94
Connection to electrode	250-115				95

Subject	1996 NEC	29CFR 1910	29CFR 1926	NFPA 70E	NESC
Temporary wiring	305	.305(a)(2)	.405(a)(2)	Part I, Ch. 3-1.2	014
Flexible Cords and Cables	400	.305(g)	.405(g)	Part I, Ch. 3-7	-
Storage Batteries	480	.268(b),.307(b)	.441	Part III, Ch. 9	140-146,420G
Hazardous (Classified) Areas	500	.307(a)	.407(a)	Part III, Ch. 8-1	127
Approval	500-6	.307(b)(2)	.407(b)(2)	Part III, Ch. 8-2	127
Class I, 11, Division 1,2 Sealing and Drainage	501-5(c)(4), 501-5(d) 502-5	.307(b)(3)	.407(b)(3)	Part III, Ch. 8-2	127
Cranes, Hoists	610	.306(b)	.406(b)	Part I, Ch. 4-2	-
Runway Conductor Disconnecting Means	610-31	.179,306(b)(1)(i)	.406(a)(1)(i)	Part I, Ch. 4-2.1.1	-
Crane and Monorail Hoist Disconnecting Means	610-32	.306(b)(1)(ii)	.406(a)(1)(ii)	Part I, Ch. 4-2.1.2	-
Limit Switch	610-55	.306(b)(2)	.406(a)(2)	Part I, Ch. 4-2.2	-
Clearance	610-57	.306(b)(3)	.406(a)(3)	Part I, Ch. 4-2.3	-
Crane and Monorail Hoist Grounding	610-61	.306(b)(1)(ii)	.406(a)(4)		-
Elevators, Dumbwaiters, Escalators	620	.306(c)	.406(b)	Part 1, Ch. 4-3	-
Elevators, Dumbwaiters, Escalators Disconnecting Means	620-51	.306(c)(1)	.406(b)(1)	Part I, Ch. 4-3.2	-
Training and Qualifications		.269(a)(2)/.332	.950(e)	Part 11, Ch. 2-1	410A,B,C, 420A,B
Medical Services/First Aid		.151,.269(b)	.50(a),.950(e)	Part 11, Ch 2-1.3	410B,420A

Subject	1996 NEC	29CFR 1910	29CFR 1926	NFPA 70E	NESC
Deenergizing lines and equipment for employee protection		.269(d)(2), .269(m), 333(a)	.950(d)	Part II, Ch. 5	442,444
Lockout/Tagout		.147(c-f),.269(d),(m),.333	.417	Part II, Ch. 5	442
Enclosed and Confined Spaces		.269(e), (t), .146.333(c)(5)	.956(a)		312,323,423
Calibration of Instruments		.269(e)(8)			-
Personal Protective Equipment		.269(j), .335(a)	.951 (d)	Part II, Ch. 3-4 Part III, Ch. 11-1	411C,420H
Approach Distances		.269(l), .333(c)	.950(c),.952(b),(c)	Part II, Ch. 2-3	441A
Work on or near energized parts		.269(l), .333(c)	.950(c)	Part 11, Ch. 2-3.3	441A, 443
Two man rule		.269(l)(1)(i), .269(p)(4)(iii)		-	443B
Equipotential Grounding		.269(n)(3)		-	444D
Testing while applying Grounds		.269(n)(5)	.954(d)	-	214A3
Connection and Removal of Grounds		.269(n)(6), (7)	.954(f)	-	445A,B
Removal of Ground for Test		.269(n)(9)	.954(g)	-	445A3
Testing and Test Facilities		.269(o)/.334(c)		Part II, Ch. 4-1	-
Operations near energized lines		.269(p)(4)	.550,.952	Part II, Ch. 2-4	443
Overhead Lines	I	.269(q)	.955(a),(b),(c)	-	200,422,444

V

CONCLUDING MATERIAL

Review Activity:

DOE
DNSFB
DP
EE
EH
EM
EML
ER
ETEC
FE
GC
IG
NBL
NE
N N
METC
OSTI
PETC
PO
RW

Operations Offices
AL
CH
I D
NV
O R
OK
RL
SR

Area Offices
Amarillo
Fernald
Kansas City
Kirtland
Los Alamos
Miamisburg
Pinellas
Princeton
Rocky Flats

National Laboratories
ANL
BNL
LANL
LBNL
LLNL
ORNL
PNNL
SNLA
SNLL

Preparing Activity:

DOE-EH-51

Project Number:

SAFT-0035

Field/Group/Project Offices
Ames
Argonne
Bartlesville
Fermi
Golden
Grand Junction
Princeton

Contractors
Ames Laboratory
Bechtel Nevada
Bechtel Hanford
Dyncorp Tri-Cities
Fermi National Accelerator Laboratory
Fernald
Flour Daniel Northwest
Kaiser Engineers Hanford
Kaiser Hill Rocky Flats
Lockheed Martin Energy Systems
Lockheed Martin Idaho
Lockheed Martin Specialty Components
Mason and Hanger Corporation
Oak Ridge Associated Universities
Princeton Plasma Physics Laboratory
Stanford Linear Accelerator Association
Southeastern Universities Research Association
Wackenhut Services
Westinghouse Hanford
Westinghouse Savannah River
West Valley Demonstration Project

DOE F1300.6 OMB Control No.
(01-94) U.S. DEPARTMENT OF ENERGY
1910-0900
OMB Burden Disclosure

COMMENT AND RESOLUTION SHEET Statement on Reverse

1. Document Title	2. Document Number	3. Document Date	4. Date Comments Sent
DOE Electrical Safety Handbook	DOE-HDBK-1021-98	January 1998	

5. Commenting Individual (Office/Name/Signature)	6. Phone	7. Resolution By (Office/Name)	8. Phone

Index			12.	113.	14.
9. Number	10. Page	11. Section/ Paragraph	Type'	Comment, Suggested Solution	Resolution of Comment

DOE F 1300.3 *(01-9a)* DOCUMENT	U.S. Department of Energy IMPROVEMENT PROPOSAL *(Instructions on Reverse)*	OMB Control No. 1910-0900 OMB Burden Disclosure Statement on Reverse
1. Document Number DOE-HDBK-1021-98	2. Document Title DOE Electrical Safety Handbook	
3a. Name of Submitting Organization	4. Type of Organization (Mark one) p vendor 11 user p Manufacturer p Other (Specify:)	
3b. Address (Street, City, Zip Code)		
5. Problem Areas (Attach extra sheets as needed.) a. Paragraph Number and Wording b. Recommended Wording c. Reason/Rationale for Recommendation		
6. Remarks		
7a. Name of Submitter (Last, First, MI)	7b. Work Telephone Number (Include Area Code)	
7c. Mailing Address (Street, City, State, Zip Code)	8. Date of Submission	

INSTRUCTIONS: In a continuing effort to improve the U.S. Department of Energy (DOE) Technical Standards, this form is provided for use in submitting comments and suggestions for improvements. All users of DOE Technical Standards are invited to provide suggestions. This form may be detached, folded along the lines indicated, taped along the loose edge (DO NOT STAPLE) mailed to the address indicated or faxed to (423) 574-0382.

1.The submitter of this form must complete blocks 1 through 8.

2.The Technical Standards Program Office (TSPO) will forward this form to the Preparing Activity. The Preparing Activity will reply to the submitter within 30 calendar days of receipt from the TSPO.

NOTE: This form may not be used to request copies of documents, nor to request waivers, deviations, or clarification of specification requirements on current contractors. Comments submitted on this form do not constitute or imply authorization to waive any portion of the referenced document(s) or to amend contractual requirements.

OMB Burden Disclosure Statement

Public reporting burden for this collection of information is estimated to average 30 minutes per response, including the time for reviewing instructions, searching existing data sources, gathering and maintaining the data needed, and completing and reviewing the collection of information. Send comments regarding this burden estimate or any other aspect of this collection of information, including suggestions for reducing this burden, to Office of Information Resources Management Policy, Plans, and Oversight, Records Management Division, HR-422-GTN, Paperwork Reduction Project (1910-0900), U.S. Department of Energy, 1000 Independence Avenue, S.W., Washington, DC 20585; and to the Office of Management and Budget (OMB), Paperwork Reduction Project (1910-0900), Washington, DC 20503.

U.S. Department of Energy Technical Standards Program Office
c/o Performance Assurance Project Office
P.O. Box 2009, Bldg. 9201-3
Oak Ridge, Tennessee 37831-8065